REVISIONS			
REV	DESCRIPTION	DATE	APPROVED
A	REMOVED CHARTS	09/12/12	R.L.
B	REVISED PER NEW TESTING	02/04/14	R.L.

NOTES:

1. THE PRODUCT SHOWN HEREIN IS DESIGNED AND MANUFACTURED TO COMPLY WITH REQUIREMENTS OF THE 2006 INTERNATIONAL BUILDING CODE AND 2006 INTERNATIONAL RESIDENTIAL CODE WITH TEXAS STATE MODIFICATIONS.
2. WOOD FRAMING AND MASONRY OPENING TO BE DESIGNED AND ANCHORED TO PROPERLY TRANSFER ALL LOADS TO STRUCTURE. FRAMING AND MASONRY OPENING IS THE RESPONSIBILITY OF THE ARCHITECT OR ENGINEER OF RECORD.
3. 1X BUCK OVER MASONRY/CONCRETE IS OPTIONAL.
4. WHERE SHIM OR BUCK THICKNESS IS LESS THAN 1–1/2" WINDOW UNITS MUST BE ANCHORED THROUGH THE FRAME IN ACCORDANCE WITH MANUFACTURER'S PUBLISHED INSTALLATION INSTRUCTIONS. ANCHORS SHALL BE SECURELY FASTENED DIRECTLY INTO MASONRY, CONCRETE OR OTHER STRUCTURAL SUBSTRATE MATERIAL.
5. WHERE WOOD BUCK THICKNESS IS 1–1/2" OR GREATER, BUCK SHALL BE SECURELY FASTENED TO MASONRY, CONCRETE OR OTHER STRUCTURAL SUBSTRATE. WINDOW UNITS MAY BE ANCHORED THROUGH FRAME TO SECURED WOOD BUCK IN ACCORDANCE WITH MANUFACTURER'S PUBLISHED INSTALLATION INSTRUCTIONS.
6. WHERE 1X BUCK IS NOT USED DISSIMILAR MATERIALS MUST BE SEPARATED WITH APPROVED COATING OR MEMBRANE. SELECTION OF COATING OR MEMBRANE IS THE RESPONSIBILITY OF THE ARCHITECT OR ENGINEER OF RECORD.
7. BUCKS SHALL EXTEND BEYOND WINDOW INTERIOR FACE SO THAT FULL FRAME SUPPORT IS PROVIDED.
8. SHIM AS REQUIRED AT EACH INSTALLATION ANCHOR WITH LOAD BEARING SHIM. SHIM WHERE SPACE OF 1/16" OR GREATER OCCURS. MAXIMUM ALLOWABLE SHIM STACK TO BE 1/4".
9. SHIMS SHALL BE MADE FROM MATERIALS CAPABLE OF SUSTAINING APPLICABLE LOADS, LOCATED AND APPLIED IN A THICKNESS CAPABLE OF SUSTAINING APPLICABLE LOADS.
10. WIND LOAD DURATION FACTOR Cd=1.6 WAS USED FOR WOOD ANCHOR CALCULATIONS.
11. FRAME MATERIAL: ALUMINUM 6063–T6.
12. UNITS MUST BE GLAZED PER ASTM E1300–04, SEE SHEET 4 FOR GLASS OPTIONS.
13. APPROVED IMPACT PROTECTIVE SYSTEM <u>IS NOT REQUIRED</u> FOR THIS PRODUCT IN WIND BORNE DEBRIS REGIONS.
14. FOR ANCHORING INTO WOOD FRAMING OR 2X BUCK USE #12 WOOD SCREWS WITH SUFFICIENT LENGTH TO ACHIEVE A 1 5/16" MINIMUM EMBEDMENT INTO SUBSTRATE. LOCATE ANCHORS AS SHOWN IN ELEVATIONS AND INSTALLATION DETAILS.
15. FOR ANCHORING INTO MASONRY/CONCRETE USE 1/4" TAPCONS WITH SUFFICIENT LENGTH TO ACHIEVE A 1 1/4" MINIMUM EMBEDMENT INTO SUBSTRATE WITH 2 1/2'' MINIMUM EDGE DISTANCE. LOCATE ANCHORS AS SHOWN IN ELEVATIONS AND INSTALLATION DETAILS.
16. FOR ANCHORING INTO METAL STRUCTURE USE #12 SMS OR SELF DRILLING SCREWS WITH SUFFICIENT LENGTH TO ACHIEVE 3 THREADS MINIMUM BEYOND STRUCTURE INTERIOR WALL. LOCATE ANCHORS AS SHOWN IN ELEVATIONS AND INSTALLATION DETAILS.
17. ALL FASTENERS TO BE CORROSION RESISTANT.
18. INSTALLATION ANCHORS SHALL BE INSTALLED IN ACCORDANCE WITH ANCHOR MANUFACTURER'S INSTALLATION INSTRUCTIONS AND ANCHORS SHALL NOT BE USED IN SUBSTRATES WITH STRENGTHS LESS THAN THE MINIMUM STRENGTH SPECIFIED BELOW:
    A. WOOD – MINIMUM SPECIFIC GRAVITY OF G=0.42
    B. CONCRETE – MINIMUM COMPRESSIVE STRENGTH OF 3,192 PSI.
    C. MASONRY – STRENGTH CONFORMANCE TO ASTM C–90, GRADE N, TYPE 1 (OR GREATER).
    D. METAL STRUCTURE: STEEL 18GA, 33KSI OR ALUMINUM 6063–T5 1/8" THICK MINIMUM

SIGNED: 02/05/2014

TABLE OF CONTENTS

SHEET NO.	DESCRIPTION
1	NOTES
2 – 3	ELEVATIONS AND CHARTS
4 – 5	B.O.M. AND CROSS SECTIONS
6 – 7	INSTALLATION DETAILS
8	COMPONENTS
9	MULLION INSTALLATION DETAILS

WinDoor INCORPORATED
7500 AMSTERDAM DRIVE
ORLANDO, FL 32832
Phone: 407.481.8400
Fax: 407.481.0505
www.windoorinc.com

9020 PICTURE WINDOW
LARGE MISSILE IMPACT
NOTES

DRAWN:	DWG NO.	REV
A.P.	08–01646	B

SCALE	DATE	SHEET
NTS	06/25/2012	1 OF 9

STATE OF TEXAS
LUIS R. LOMAS
101889
LICENSED
PROFESSIONAL ENGINEER

Luis R. Lomas P.E.
Texas No. 101889

REVISIONS			
REV	DESCRIPTION	DATE	APPROVED
A	REMOVED CHARTS	09/12/12	R.L.
B	REVISED PER NEW TESTING	02/04/14	R.L.

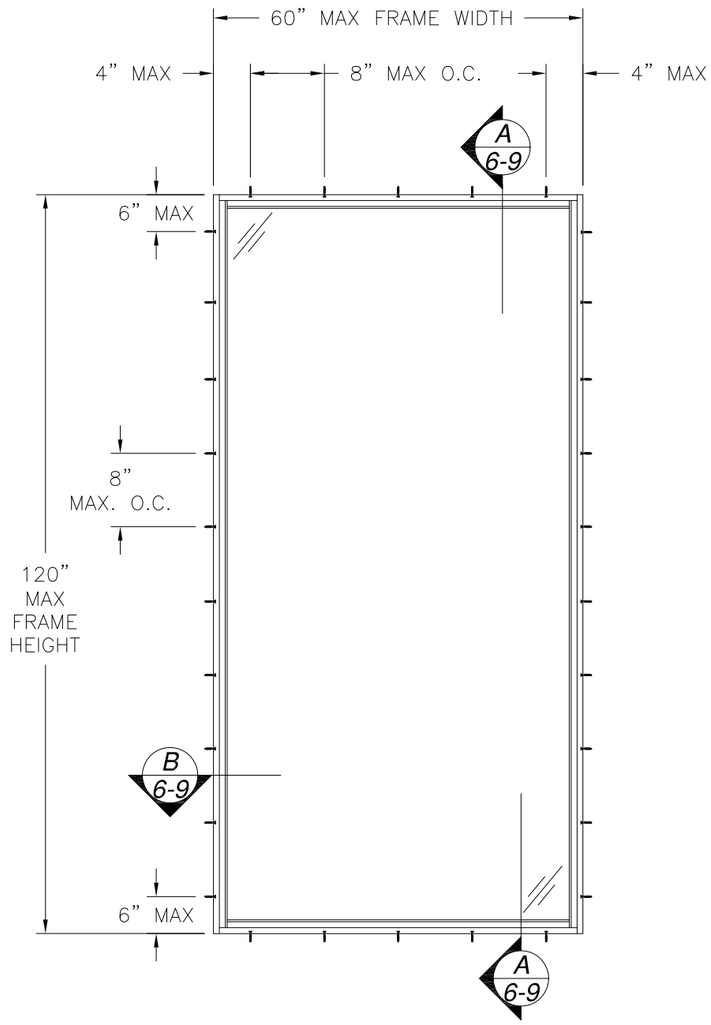

9020 PICTURE WINDOW
EXTERIOR VIEW

DESIGN PRESSURE RATING	IMPACT RATING
±100.0PSF	LARGE MISSILE IMPACT

MISSILE LEVEL D, WIND ZONE 4 AND HVHZ WITH GLAZING A

DESIGN PRESSURE RATING	IMPACT RATING
±90.0PSF	LARGE MISSILE IMPACT

MISSILE LEVEL D, WIND ZONE 4 AND HVHZ WITH GLAZING B AND C

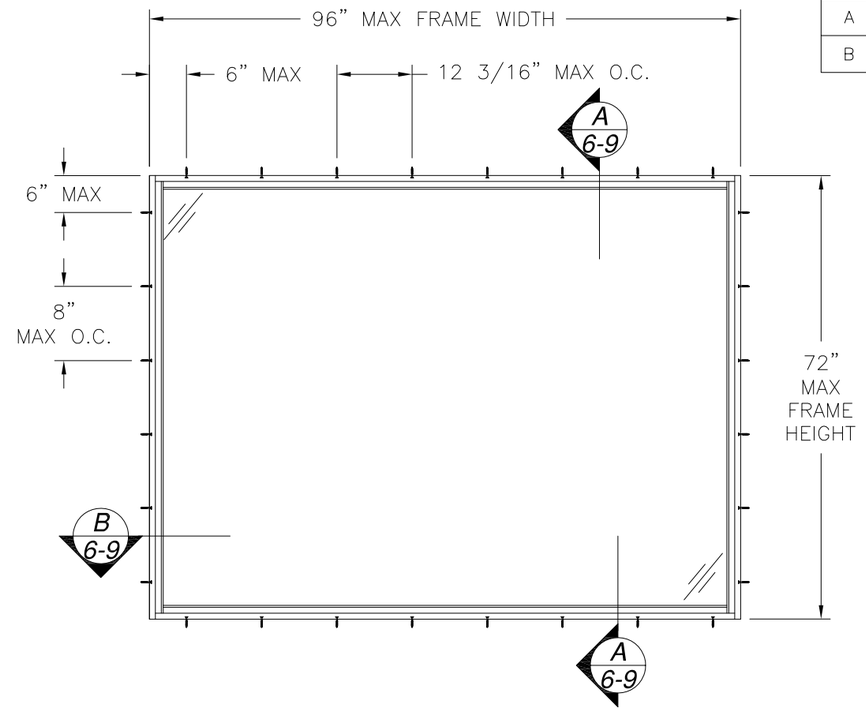

9020 PICTURE WINDOW
EXTERIOR VIEW

DESIGN PRESSURE RATING	IMPACT RATING
±110.0PSF	LARGE MISSILE IMPACT

MISSILE LEVEL D, WIND ZONE 4 AND HVHZ WITH GLAZING A, B AND C

SIGNED: 02/05/2014

WinDoor INCORPORATED
7500 AMSTERDAM DRIVE
ORLANDO, FL 32832
Phone: 407.481.8400
Fax: 407.481.0505
www.windoorinc.com

9020 PICTURE WINDOW
LARGE MISSILE IMPACT
ELEVATIONS

DRAWN:	DWG NO.	REV
A.P.	08-01646	B

SCALE	DATE	SHEET
NTS	06/25/2012	2 OF 9

STATE OF TEXAS
LUIS R. LOMAS
101889
LICENSED
PROFESSIONAL ENGINEER

Luis R. Lomas P.E.
Texas No. 101889

REVISIONS			
REV	DESCRIPTION	DATE	APPROVED
A	REMOVED CHARTS	09/12/12	R.L.
B	REVISED PER NEW TESTING	02/04/14	R.L.

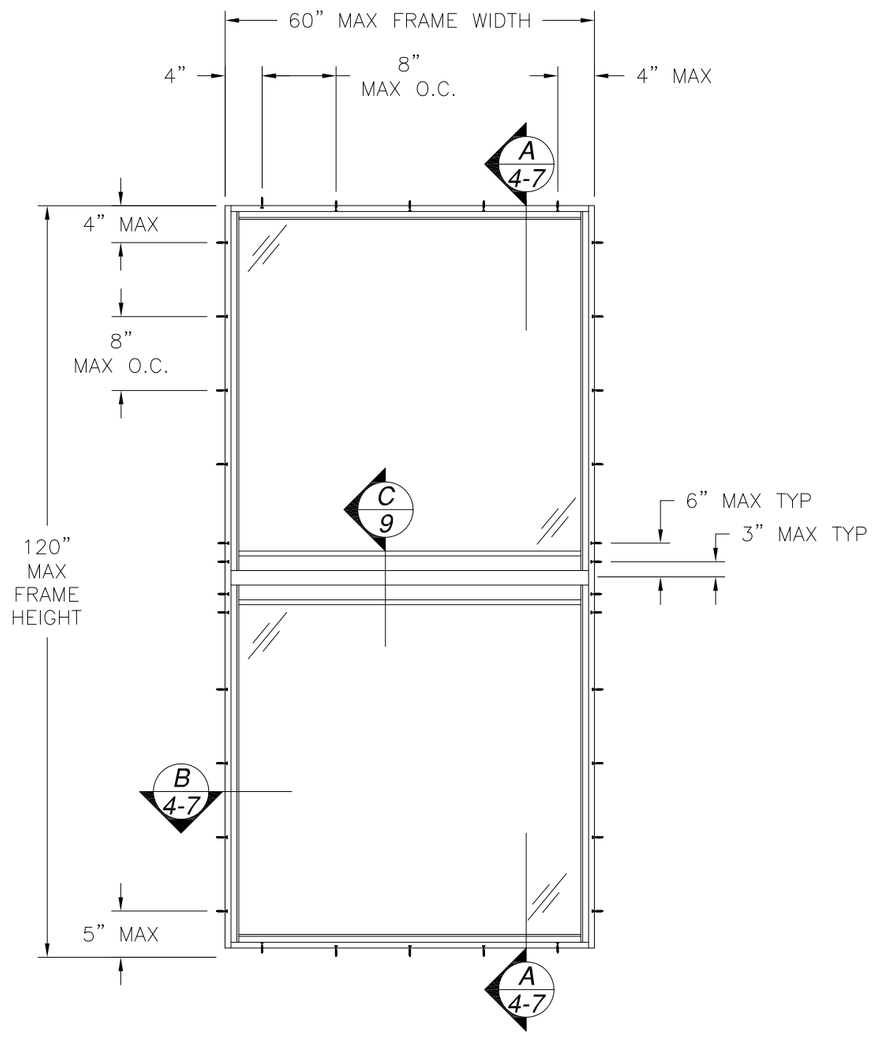

9020 PICTURE WINDOW

EXTERIOR VIEW

DESIGN PRESSURE RATING	IMPACT RATING
+100.0/-120.0PSF	LARGE MISSILE IMPACT

MISSILE LEVEL D, WIND ZONE 4 AND HVHZ
WITH GLAZING A AND B

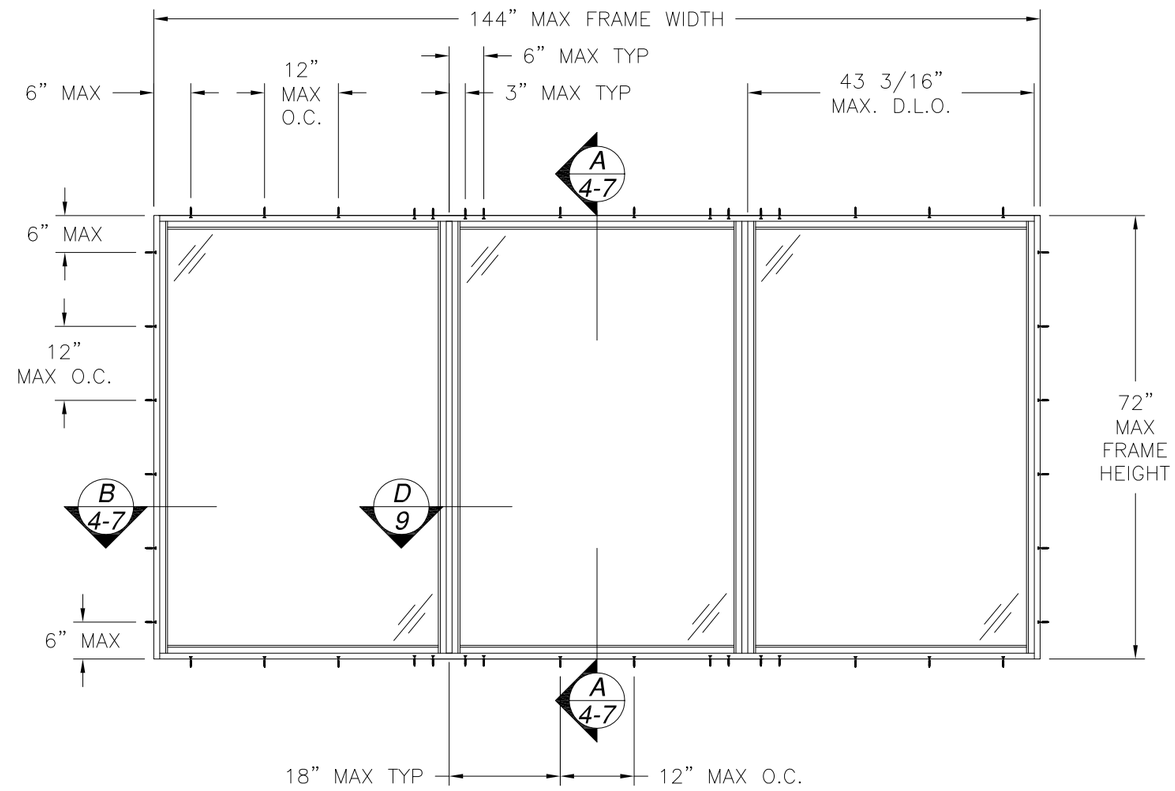

9020 TRIPLE PICTURE WINDOW

EXTERIOR VIEW

DESIGN PRESSURE RATING	IMPACT RATING
±85.0PSF	LARGE MISSILE IMPACT

MISSILE LEVEL D, WIND ZONE 4 AND HVHZ
WITH GLAZING A, B AND C

SIGNED: 02/05/2014

WinDoor INCORPORATED
7500 AMSTERDAM DRIVE
ORLANDO, FL 32832
Phone: 407.481.8400
Fax: 407.481.0505
www.windoorinc.com

9020 PICTURE WINDOW
LARGE MISSILE IMPACT
ELEVATIONS

DRAWN:	DWG NO.	REV
A.P.	08-01646	B
SCALE NTS	DATE 06/25/2012	SHEET 3 OF 9

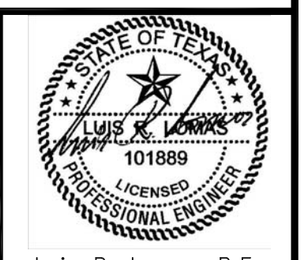

Luis R. Lomas P.E.
Texas No. 101889

PARTS LIST				
NO.	PART NUMBER	DESCRIPTION	MANUFACTURER	MATERIAL
1	S-9020A1-WDI	FRAME HEAD AND SILL ASSEMBLY	KEYMARK	ALUMINUM 6063-T6
2	S-9020A2-WDI	FRAME JAMB ASSEMBLY	KEYMARK	ALUMINUM 6063-T6
3	S-9020A3-WDI	MULL ASSEMBLY	KEYMARK	ALUMINUM 6063-T6
4	FH-06559	MULL INTERIOR REINFORCEMENT	KEYMARK	ALUMINUM 6005-T61
5	FS-06558	MULL EXTERIOR REINFORCEMENT	KEYMARK	ALUMINUM 6005-T61
6	S-49328	SCREW COVER	KEYMARK	ALUMINUM 6063-T6
7	S-49330	FLUSH ADAPTOR	KEYMARK	ALUMINUM 6063-T6
8	S-49329	9/16" GLASS STOP	KEYMARK	ALUMINUM 6063-T6
9	S-46084	1" GLASS STOP	KEYMARK	ALUMINUM 6063-T6
10	S-46083	1 3/8" GLASS STOP	KEYMARK	ALUMINUM 6063-T6
11	GSVN-07A	GLAZING VINYL	TEAM PLASTICS	80 DUROMETER
12	131014	#8x1" SCREW		STAINLESS STEEL
13		#8x1 3/4" SCREW		STAINLESS STEEL
14		#12x1" SCREW		STAINLESS STEEL
15	121000-12100E1	SETTING BLOCK		RUBBER
16	SIKA 552	URETHANE SEALANT		
17	S-9020A8-WDI	CA RAIL ASSEMBLY	KEYMARK	ALUMINUM 6063-T6
18	S-9020A5-WDI	MEDIUM RAIL ASSEMBLY	KEYMARK	ALUMINUM 6063-T6
19	S-9020A6-WDI	TALL RAIL ASSEMBLY	KEYMARK	ALUMINUM 6063-T6
20	2206	INSULBAR	ENSINGER	TECATHERM 66GF

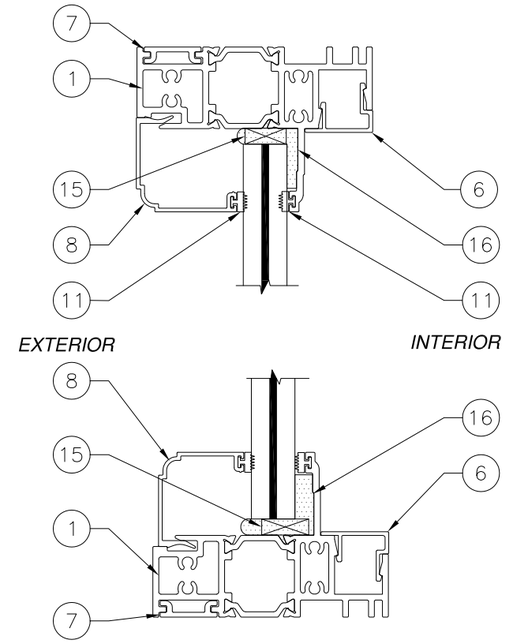

A/4 VERTICAL SECTION

STANDARD/STANDARD RAILS

FOR APPROVED RAIL COMBINATIONS SEE SHEET 7

REVISIONS			
REV	DESCRIPTION	DATE	APPROVED
A	REMOVED CHARTS	09/12/12	R.L.
B	REVISED PER NEW TESTING	02/04/14	R.L.

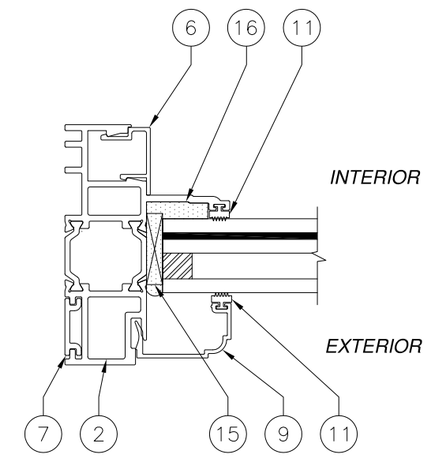

B/4 HORIZONTAL CROSS SECTION

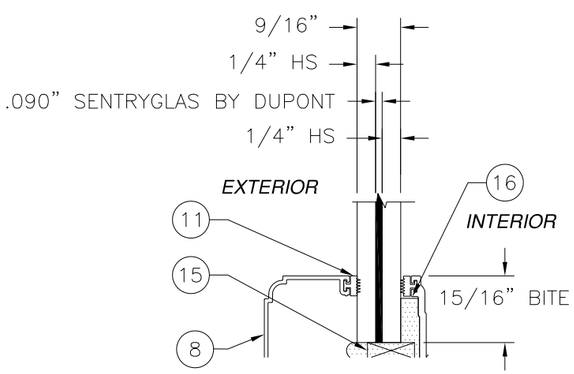

GLAZING DETAIL A

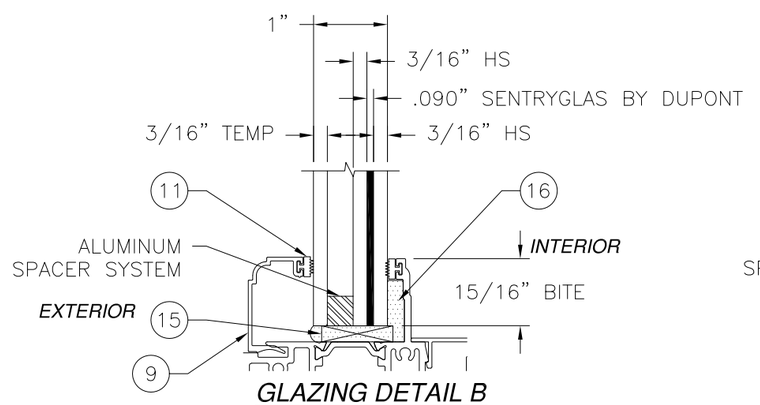

GLAZING DETAIL B

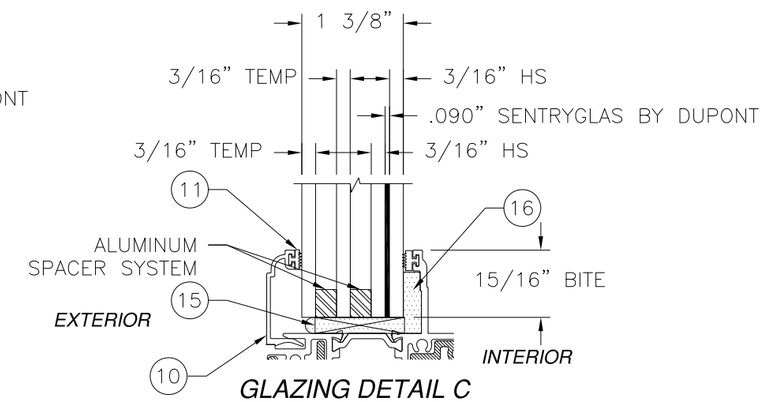

GLAZING DETAIL C

SIGNED: 02/05/2014

WinDoor INCORPORATED

7500 AMSTERDAM DRIVE
ORLANDO, FL 32832
Phone: 407.481.8400
Fax: 407.481.0505
www.windoorinc.com

9020 PICTURE WINDOW
LARGE MISSILE IMPACT
B.O.M. AND CROSS SECTIONS

DRAWN:	DWG NO.	REV
A.P.	08-01646	B

SCALE	DATE	SHEET
NTS	06/25/2012	4 OF 9

STATE OF TEXAS
LUIS R. LOMAS
101889
LICENSED
PROFESSIONAL ENGINEER

Luis R. Lomas P.E.
Texas No. 101889

REVISIONS			
REV	DESCRIPTION	DATE	APPROVED
A	REMOVED CHARTS	09/12/12	R.L.
B	REVISED PER NEW TESTING	02/04/14	R.L.

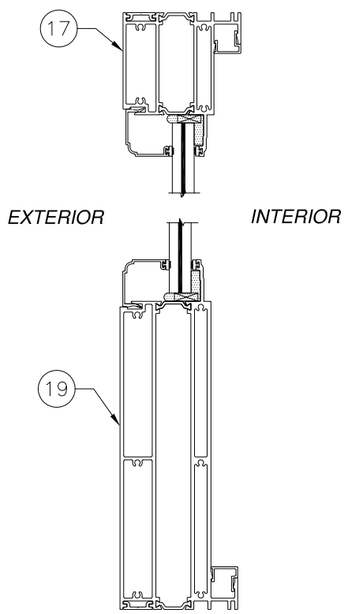

CA/TALL RAILS

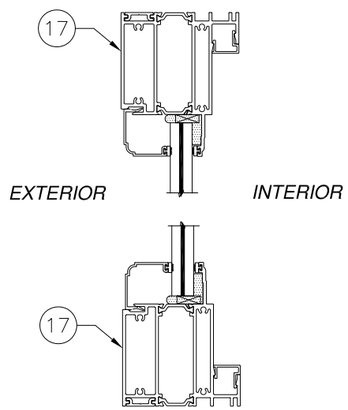

CA/CA RAILS

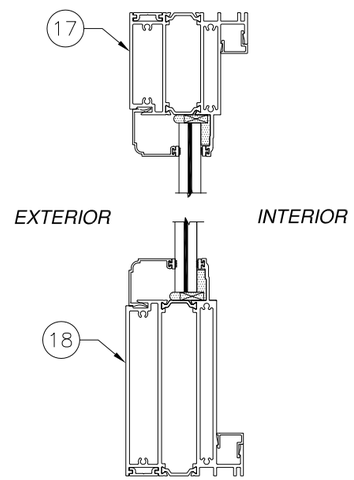

CA/MEDIUM RAILS

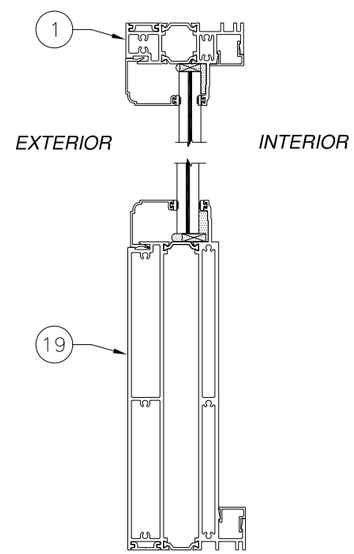

STANDARD/TALL RAILS

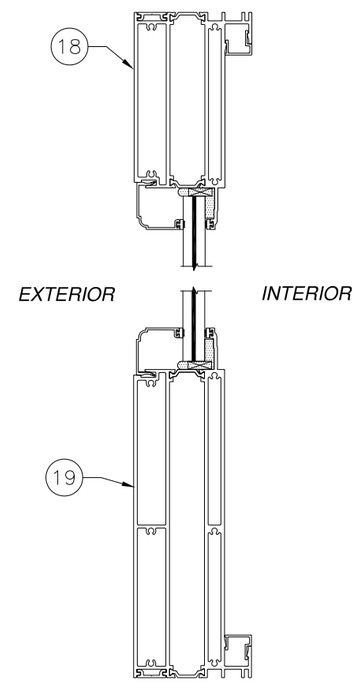

MEDIUM/TALL RAILS

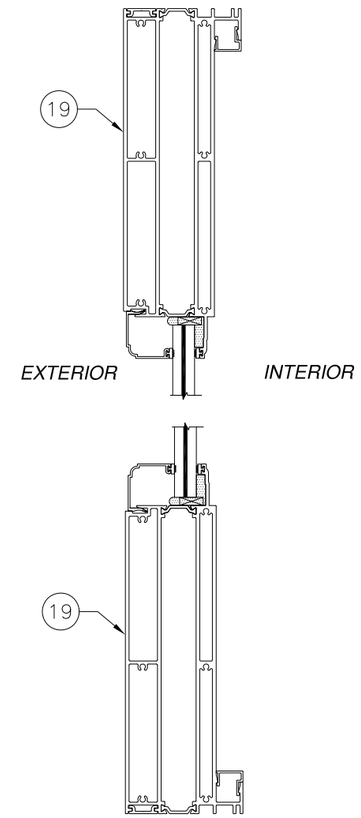

TALL/TALL RAILS

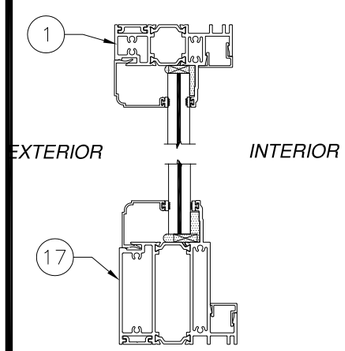

STANDARD/CA RAILS

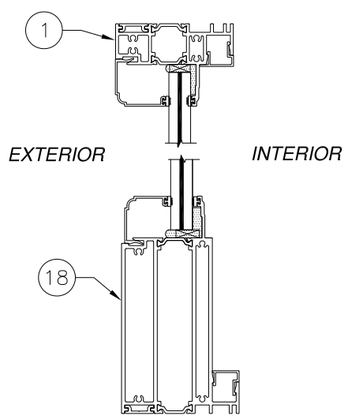

STANDARD/MEDIUM RAILS

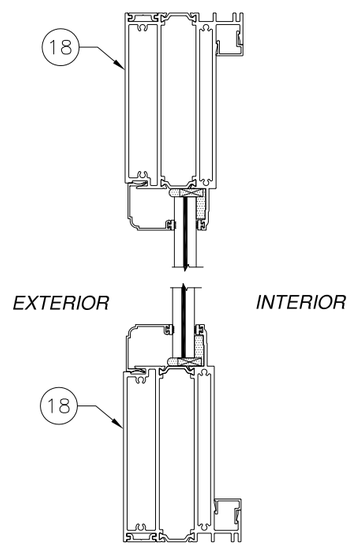

MEDIUM/MEDIUM RAILS

SIGNED: 02/05/2014

APPROVED RAIL COMBINATIONS

FOR OTHER ITEMS SEE VERTICAL
CROSS SECTION SHEET 4

WinDoor INCORPORATED
7500 AMSTERDAM DRIVE
ORLANDO, FL 32832
Phone: 407.481.8400
Fax: 407.481.0505
www.windoorinc.com

9020 PICTURE WINDOW
LARGE MISSILE IMPACT
APPROVED RAIL COMBINATIONS

DRAWN:	DWG NO.	REV
A.P.	08-01646	B

SCALE	DATE	SHEET
NTS	06/25/2012	5 OF 9

Luis R. Lomas P.E.
Texas No. 101889

REVISIONS			
REV	DESCRIPTION	DATE	APPROVED
A	REMOVED CHARTS	09/12/12	R.L.
B	REVISED PER NEW TESTING	02/04/14	R.L.

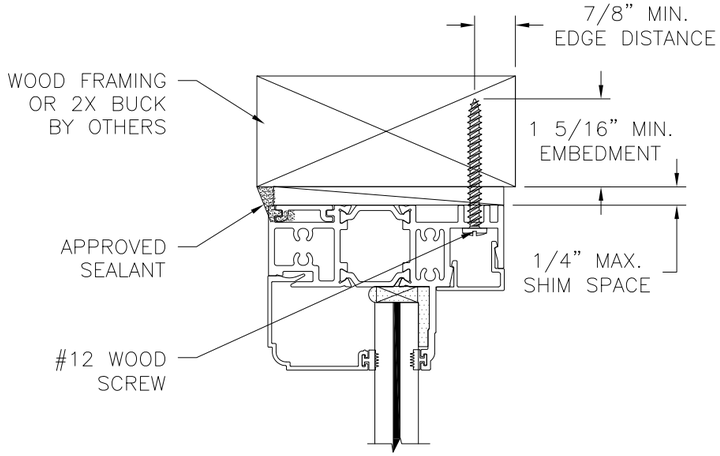

A/6 VERTICAL CROSS SECTION
WOOD FRAMING OR 2X BUCK INSTALLATION

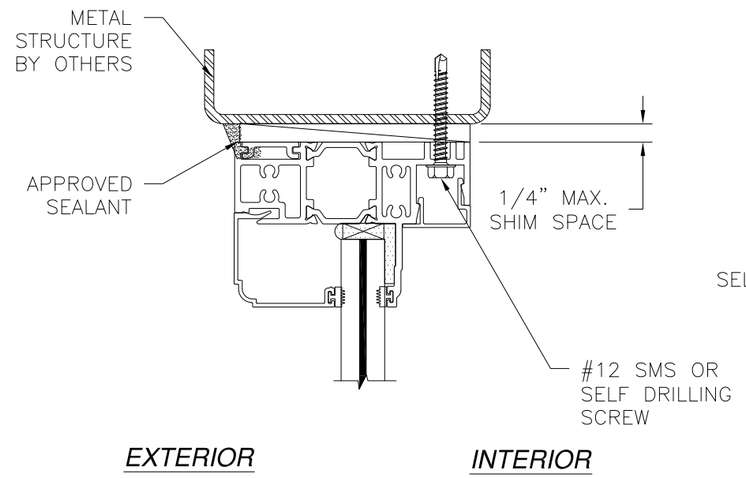

A/6 VERTICAL CROSS SECTION
METAL STRUCTURE INSTALLATION

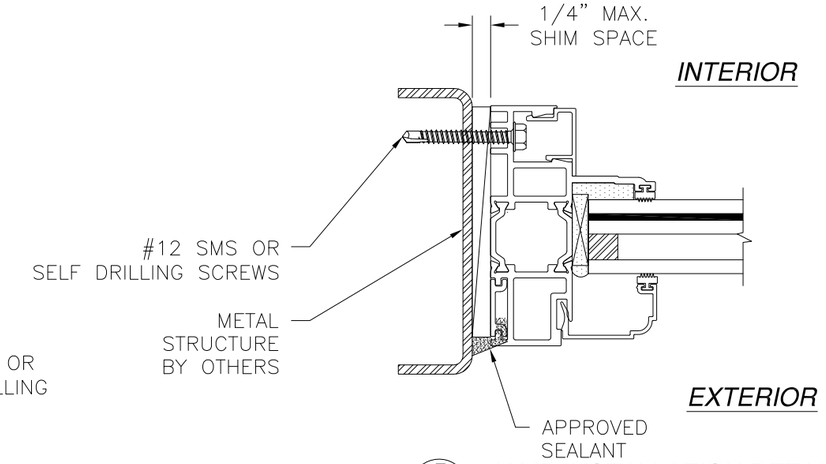

B/6 JAMB INSTALLATION DETAIL
METAL STRUCTURE INSTALLATION

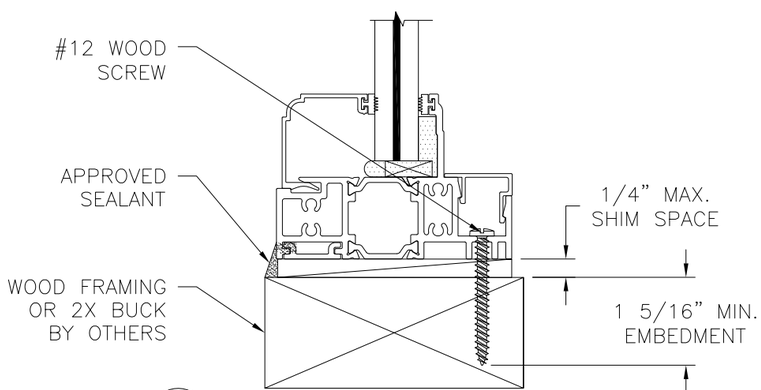

A/6 VERTICAL CROSS SECTION
WOOD FRAMING OR 2X BUCK INSTALLATION

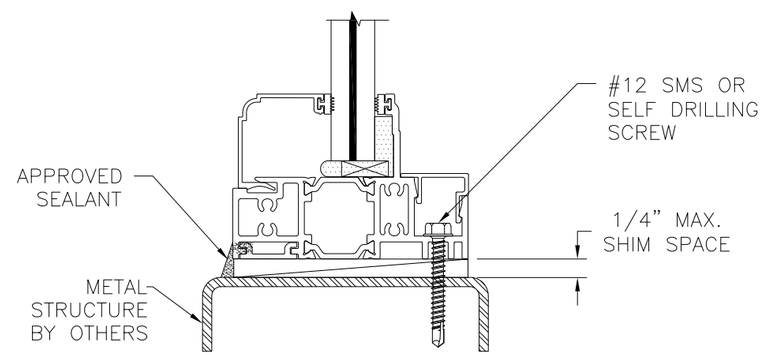

A/6 VERTICAL CROSS SECTION
METAL STRUCTURE INSTALLATION

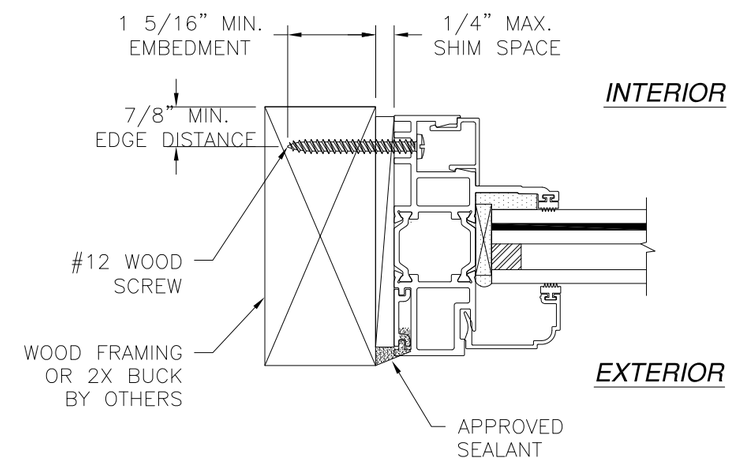

B/6 JAMB INSTALLATION DETAIL
WOOD FRAMING OR 2X BUCK INSTALLATION

SIGNED: 02/05/2014

NOTES:
1. INTERIOR AND EXTERIOR FINISHES, BY OTHERS, NOT SHOWN FOR CLARITY.
2. PERIMETER AND JOINT SEALANT BY OTHERS TO BE DESIGNED IN ACCORDANCE WITH ASTM E2112

WinDoor INCORPORATED
7500 AMSTERDAM DRIVE
ORLANDO, FL 32832
Phone: 407.481.8400
Fax: 407.481.0505
www.windoorinc.com

9020 PICTURE WINDOW
LARGE MISSILE IMPACT
INSTALLATION DETAILS

DRAWN:	DWG NO.	REV
A.P.	08-01646	B
SCALE NTS	DATE 06/25/2012	SHEET 6 OF 9

STATE OF TEXAS
LUIS R. LOMAS
101889
LICENSED
PROFESSIONAL ENGINEER

Luis R. Lomas P.E.
Texas No. 101889

REVISIONS			
REV	DESCRIPTION	DATE	APPROVED
A	REMOVED CHARTS	09/12/12	R.L.
B	REVISED PER NEW TESTING	02/04/14	R.L.

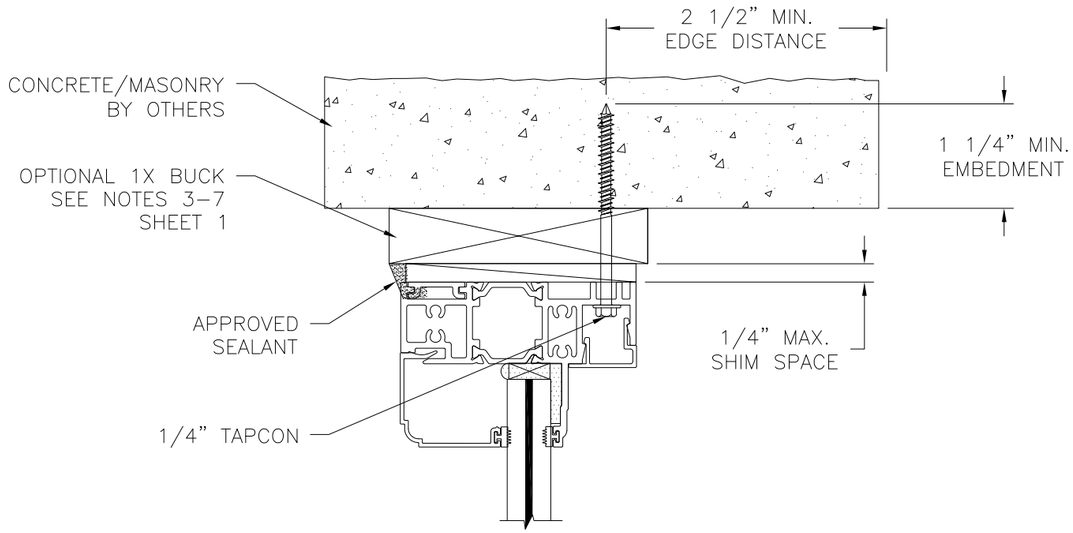

EXTERIOR INTERIOR

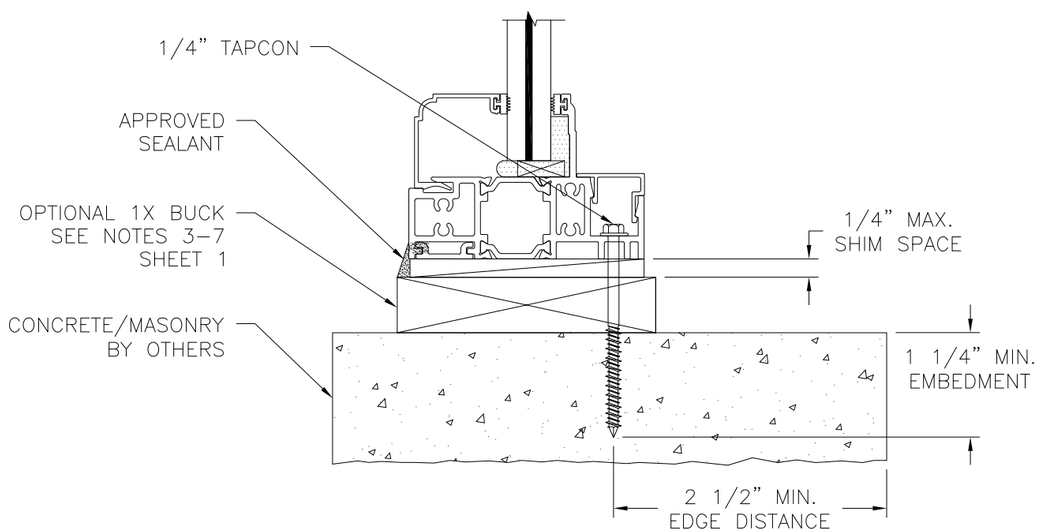

A/7 VERTICAL CROSS SECTION
CONCRETE/MASONRY INSTALLATION

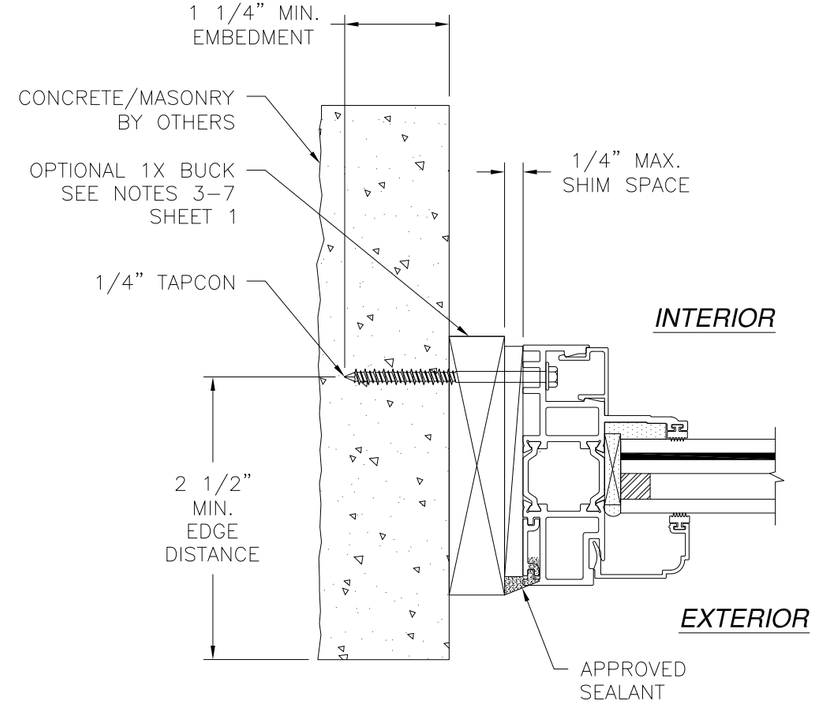

B/7 JAMB INSTALLATION DETAIL
CONCRETE/MASONRY INSTALLATION

NOTES:
1. INTERIOR AND EXTERIOR FINISHES, BY OTHERS, NOT SHOWN FOR CLARITY.
2. PERIMETER AND JOINT SEALANT BY OTHERS TO BE DESIGNED IN ACCORDANCE WITH ASTM E2112

SIGNED: 02/05/2014

WinDoor INCORPORATED
7500 AMSTERDAM DRIVE
ORLANDO, FL 32832
Phone: 407.481.8400
Fax: 407.481.0505
www.windoorinc.com

9020 PICTURE WINDOW
LARGE MISSILE IMPACT
INSTALLATION DETAILS

DRAWN:	DWG NO.	REV
A.P.	08–01646	B
SCALE NTS	DATE 06/25/2012	SHEET 7 OF 9

Luis R. Lomas P.E.
Texas No. 101889

REVISIONS			
REV	DESCRIPTION	DATE	APPROVED
A	REMOVED CHARTS	09/12/12	R.L.
B	REVISED PER NEW TESTING	02/04/14	R.L.

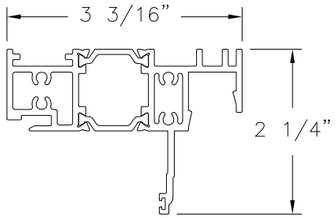

1 **FRAME**
ALUMINUM 6063-T6 .080" THICK

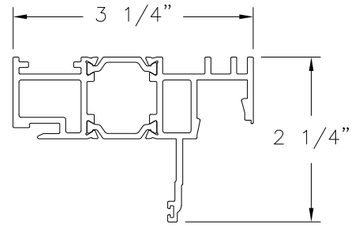

2 **FRAME**
ALUMINUM 6063-T6 .080" THICK

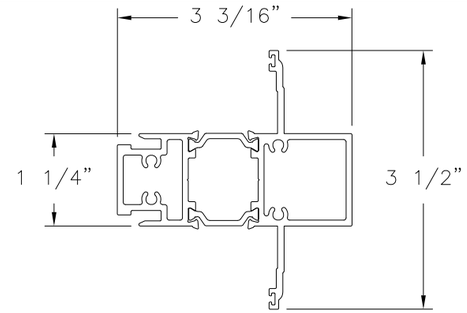

3 **MULL ASSEMBLY**
ALUMINUM 6063-T6 .080" THICK

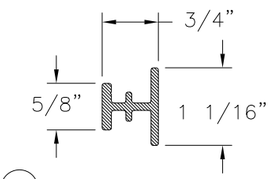

4 **REINFORCEMENT**
ALUMINUM 6005-T61 .100" THICK

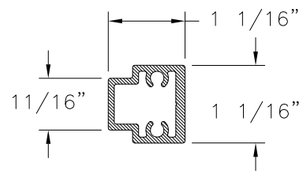

5 **REINFORCEMENT**
ALUMINUM 6005-T61 .080" THICK

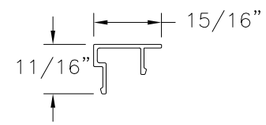

6 **SCREW COVER**
ALUMINUM 6063-T6 .050" THICK

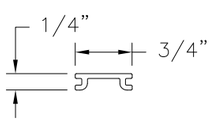

7 **FLUSH ADAPTOR**
ALUMINUM 6063-T6 .065" THICK

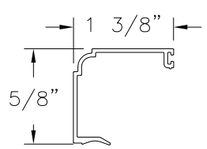

8 **9/16" GLASS STOP**
.063" THICK

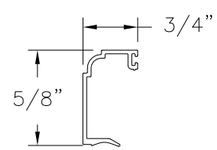

9 **1" GLASS STOP**
.063" THICK

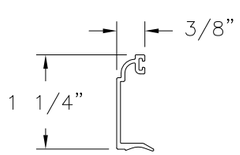

10 **1 3/8" GLASS STOP**
.063" THICK

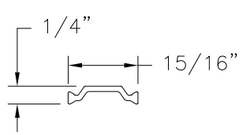

20 **INSULBAR**
TECATHERM 66GF .075" THICK

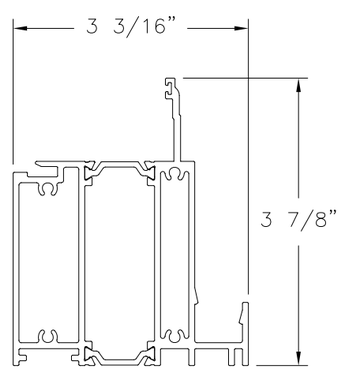

17 **CA RAIL**
ALUMINUM 6063-T6 .100" THICK

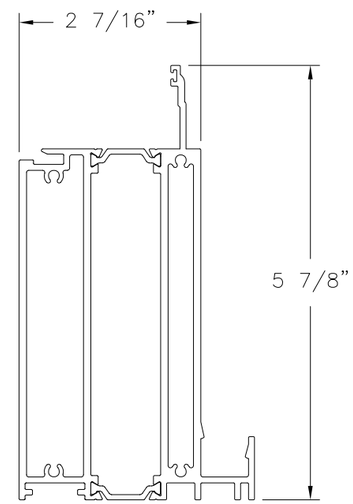

18 **MIDDLE RAIL**
ALUMINUM 6063-T6 .080" THICK

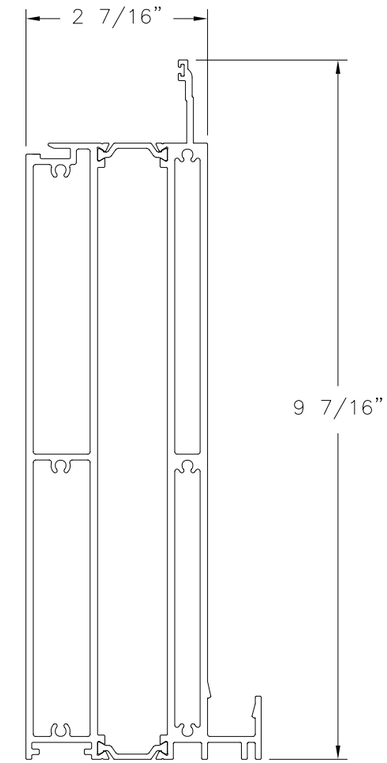

19 **TALL RAIL**
ALUMINUM 6063-T6 .100" THICK

SIGNED: 02/05/2014

WinDoor INCORPORATED
7500 AMSTERDAM DRIVE
ORLANDO, FL 32832
Phone: 407.481.8400
Fax: 407.481.0505
www.windoorinc.com

9020 PICTURE WINDOW
LARGE MISSILE IMPACT
COMPONENTS

DRAWN:	DWG NO.	REV
A.P.	08-01646	B
SCALE NTS	DATE 06/25/2012	SHEET 8 OF 9

STATE OF TEXAS
LUIS R. LOMAS
101889
LICENSED
PROFESSIONAL ENGINEER

Luis R. Lomas P.E.
Texas No. 101889

REVISIONS			
REV	DESCRIPTION	DATE	APPROVED
A	REMOVED CHARTS	09/12/12	R.L.
B	REVISED PER NEW TESTING	02/04/14	R.L.

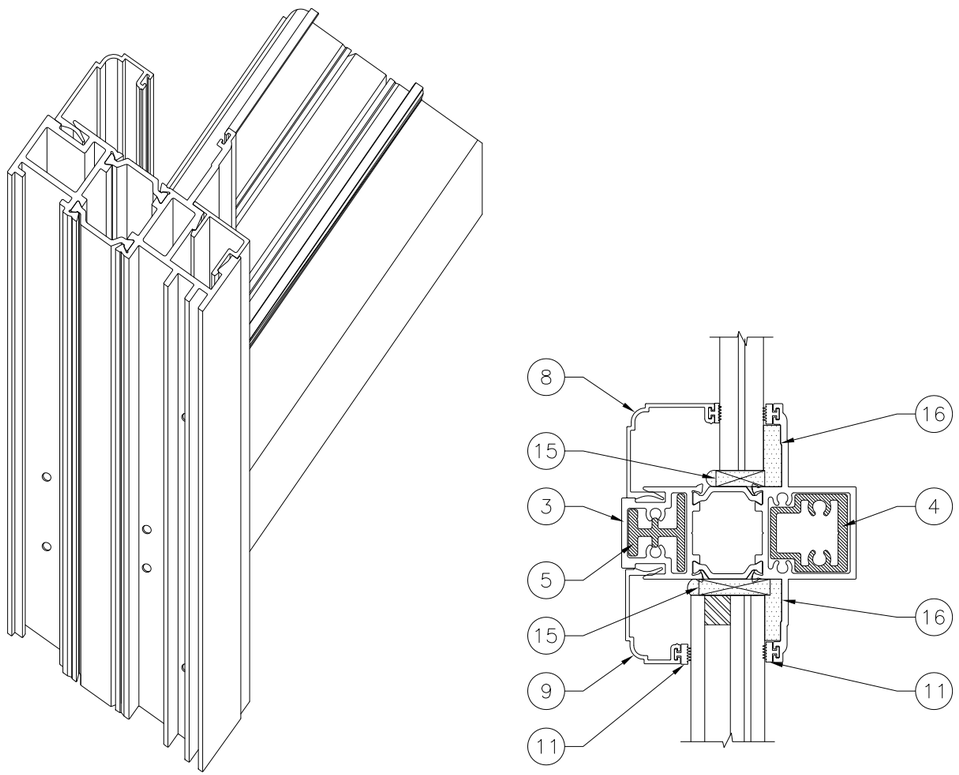

C/9 HORIZONTAL INTEGRAL MULLION

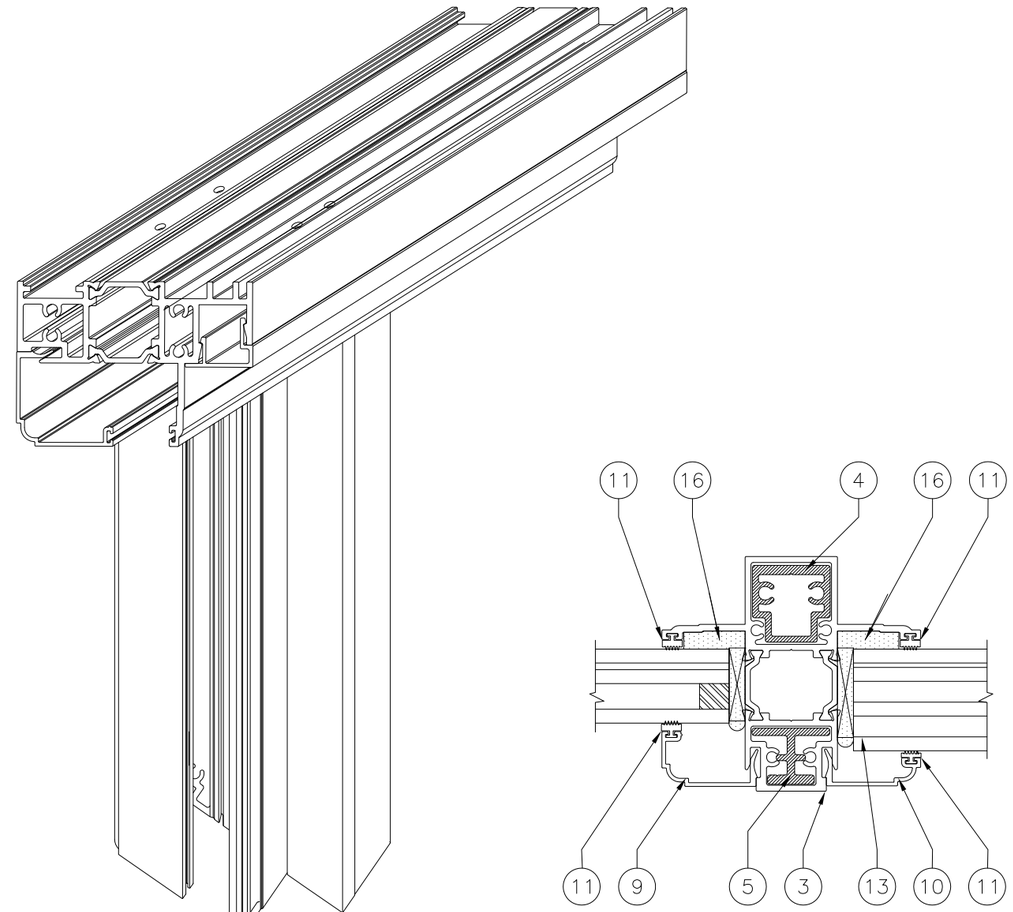

D/9 VERTICAL INTEGRAL MULLION

SIGNED: 02/05/2014

WinDoor INCORPORATED
7500 AMSTERDAM DRIVE
ORLANDO, FL 32832
Phone: 407.481.8400
Fax: 407.481.0505
www.windoorinc.com

9020 PICTURE WINDOW
LARGE MISSILE IMPACT
MULLION INSTALLATION DETAILS

DRAWN:	DWG NO.	REV
A.P.	08-01646	B

SCALE	DATE	SHEET
NTS	06/25/2012	9 OF 9

STATE OF TEXAS
LUIS R. LOMAS
101889
LICENSED
PROFESSIONAL ENGINEER

Luis R. Lomas P.E.
Texas No. 101889