Soft-Lite® Windows

Bringing quality to light.

10250 Philipp Parkway
Streetsboro, Ohio 44241

"5300 DSL53 (G5352)"
DOUBLE SLIDER WINDOW
"IMPACT"

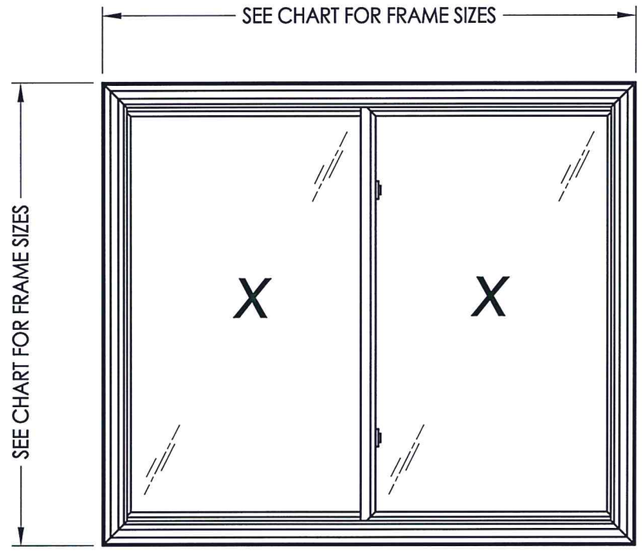

EVALUATED FOR USE IN THE STATE OF TEXAS

The Soft-Lite Horizontal Sliding Window described herein complies with the 2006 International Residential Code (IRC), Sections R301 & R613 and the 2006 International Building Code (IBC), Sections 1405.12, 1609, 1714.5, 2403 and 2404 (including Texas revisions) subject to the following conditions:

1. Anchors shall be as listed and spaced as shown in the details. Anchor embedment to base material shall be beyond wall dressing or stucco.
2. When used in areas requiring wind-borne debris protection (Inland I areas), this product complies with Section R301.2.1.2 of the IRC and Section 1609.1.2 of the IBC and does not require impact protection. This product meets missile level "C" and excludes Wind Zones 3 & 4 as defined in ASTM E 1996.
3. Allowable design pressure requirements must be equal to or less than the design pressure rating shown in the design pressure chart, sheet 1 of this drawing.
4. Conditions not covered by this drawing are subject to further engineering analysis.

TABLE OF CONTENTS	
SHEET#	**DESCRIPTION**
1	Typical elevations, design pressures and general notes
2	Horizontal and vertical cross sections
3	Buck and frame anchoring
4	Bill of materials, components and glazing details

MAX. FRAME DIMENSION	MAX. D.L.O. DIMENSION	GLASS TYPE	DESIGN PRESSURE (PSF)	
			POSITIVE	NEGATIVE
60.0" X 52.0"	25.75" x 44.38"	G1	+50.0	-50.0

STATE OF TEXAS
LYNDON F. SCHMIDT
104123
LICENSED PROFESSIONAL ENGINEER
2-3-16

Documents Prepared By: Lyndon F. Schmidt, P.E.
TEXAS P.E. #104123

RW BUILDING CONSULTANTS, INC.
P.O. Box 230 Valrico FL 33595
Phone No.: 813.659.9197

TEXAS BOARD OF PROFESSIONAL ENGINEERS
CERTIFICATE OF REGISTRATION # F-11852

PRODUCT: SOFT-LITE WINDOWS

PART OR ASSEMBLY: TYPICAL ELEVATION, DESIGN PRESSURES & GENERAL NOTES

NO.	DATE	BY	REVISIONS

DATE: 11/19/15
SCALE: N.T.S.
DWG. BY: JK
CHK. BY: LFS
DRAWING NO.: TX-4587
SHEET 1 OF 4

© 2015 R.W. BUILDING CONSULTANTS INC.

R:\Clients\Soft-Lite Permanent\B - Texas Dept of Ins\TDI - WIN XXX - Horizontal Sliding Window 5300 DSL53 (G5352) Impact Job 93\Drawings\TX-4587.dwg, TX-4587

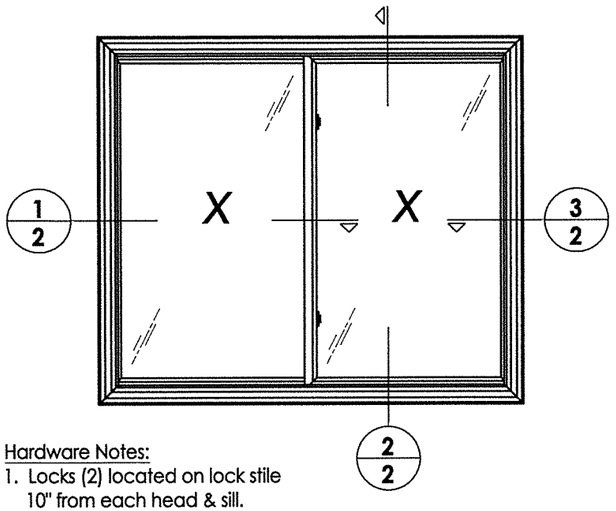

Hardware Notes:
1. Locks (2) located on lock stile 10" from each head & sill.

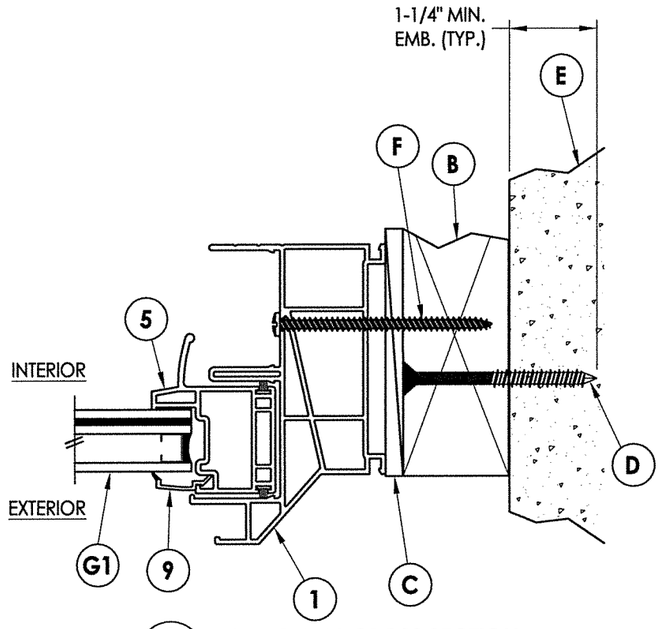

3/2 **HORIZONTAL CROSS SECTION**
Shown w/ 2X Buck Masonry Construction

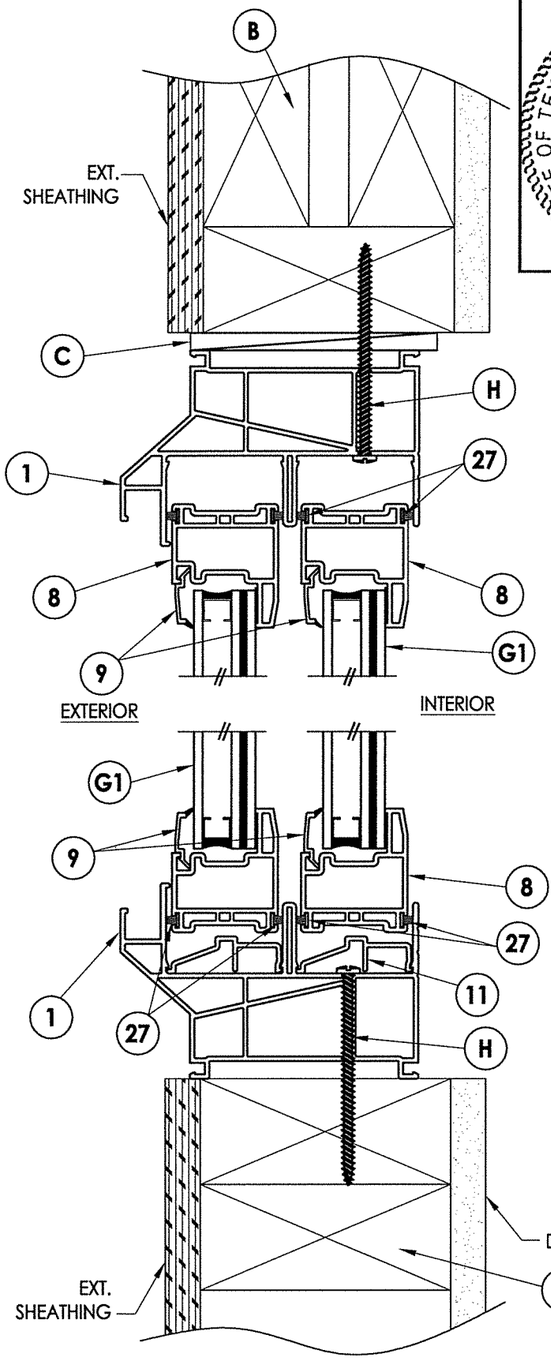

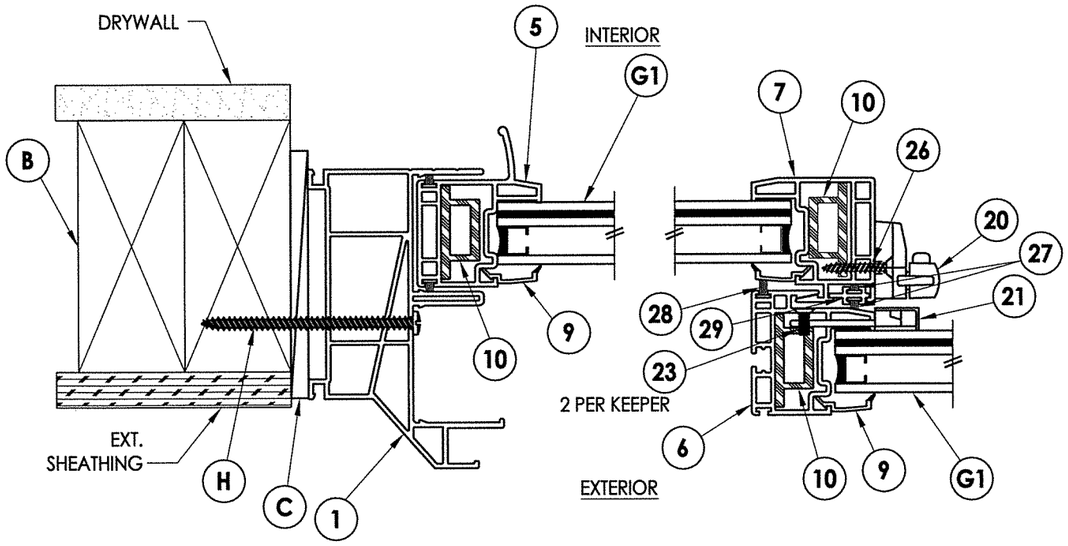

1/2 **HORIZONTAL CROSS SECTION**
1/2 **HORIZONTAL CROSS SECTION**
Shown w/ 2X buck

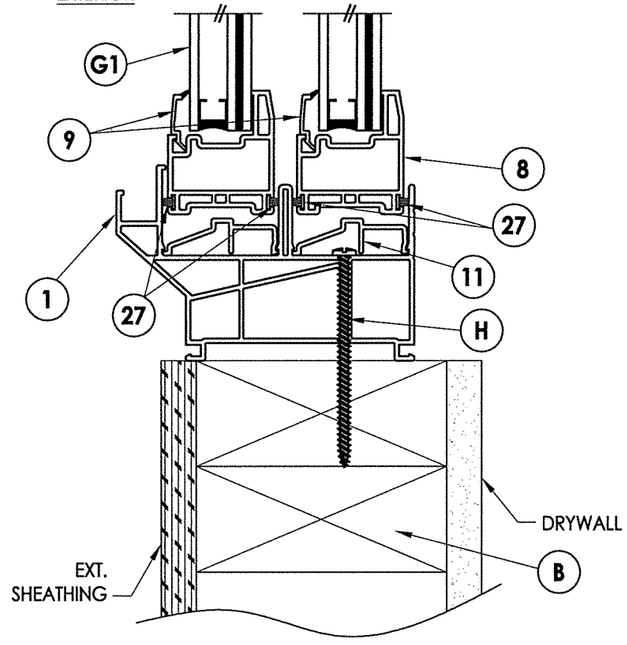

2/2 **VERTICAL CROSS SECTION**

Documents Prepared By: Lyndon F. Schmidt, P.E.
TEXAS P.E. #104123

RW BUILDING CONSULTANTS, INC.
P.O. Box 230 Valrico FL. 33595
Phone No.: 813.659.9197

TEXAS BOARD OF PROFESSIONAL ENGINEERS
CERTIFICATE OF REGISTRATION # F-11852

STATE OF TEXAS · LYNDON F. SCHMIDT · 104123 · LICENSED PROFESSIONAL ENGINEER
3.3.16

PRODUCT: SOFT-LITE WINDOWS

PART OR ASSEMBLY: HORIZONTAL AND VERTICAL CROSS SECTIONS

NO.	DATE	REVISIONS	BY

DATE: 11/19/15
SCALE: N.T.S.
DWG. BY: JK
CHK. BY: LFS
DRAWING NO.: TX-4587
SHEET 2 OF 4

© 2015 R.W. Building Consultants Inc.

R:\Clients\Soft-Lite Permanent\B - Texas Dept of Ins\TDI - WIN XXX - Horizontal Sliding Window 5300 DSL53 (G5352) Impact Job 93\Drawings\TX-4587.dwg, 2.1

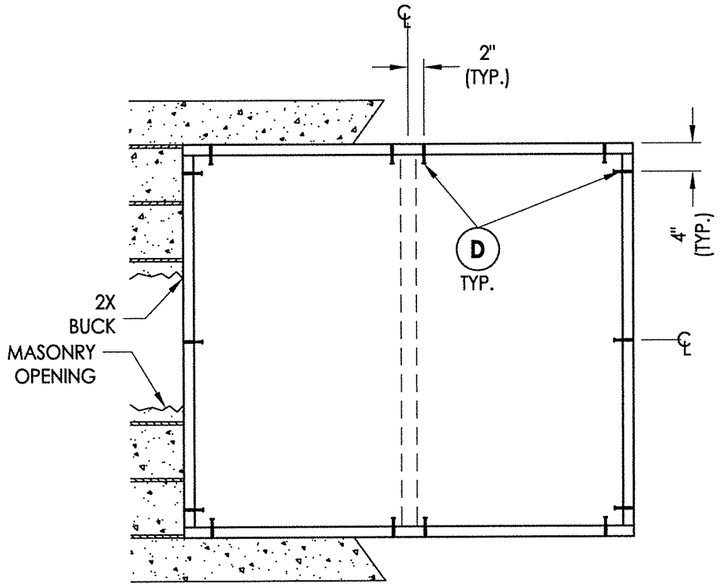

BUCK ANCHORING
2X BUCK MASONRY CONSTRUCTION

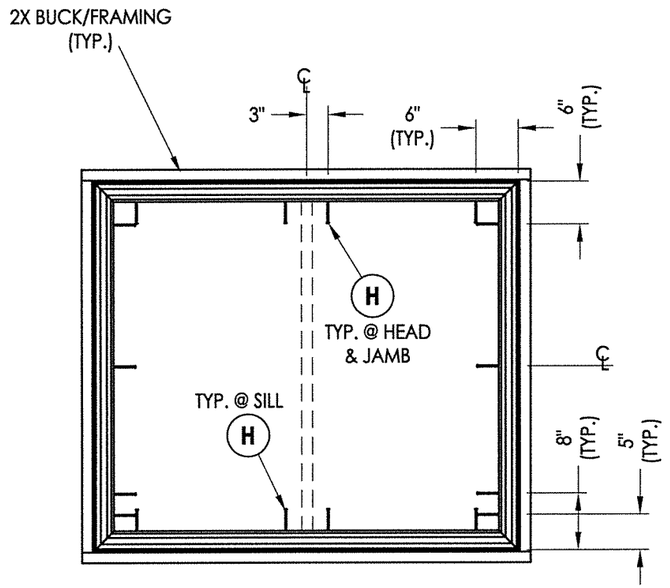

FRAME ANCHORING

CONCRETE ANCHOR NOTES:
1. Concrete anchor locations at the corners may be adjusted to maintain the min. edge distance to mortar joints.
2. Concrete anchor locations noted as "MAX. ON CENTER" must be adjusted to maintain the min. edge distance to mortar joints, additional concrete anchors may be required to ensure the "MAX. ON CENTER" dimension are not exceeded.
3. Concrete anchor table:

ANCHOR TYPE	ANCHOR SIZE	MIN. EMBEDMENT	MIN. CLEARANCE TO MASONRY EDGE	MIN. CLEARANCE TO ADJACENT ANCHOR
ITW TAPCON®	1/4"	1-1/4"	2"	4"

WOOD SCREW INSTALLATION NOTES:
1. Maintain a minimum 5/8" edge distance, 1" end distance, & 1" o.c. spacing of wood screws to prevent the splitting of wood.

STATE OF TEXAS
LYNDON F. SCHMIDT
104123
LICENSED
PROFESSIONAL ENGINEER
3.3.16

Documents Prepared By: Lyndon F. Schmidt, P.E.
TEXAS P.E. #104123

RW BUILDING CONSULTANTS, INC.
P.O. Box 230 Valrico FL. 33595
Phone No.: 813.659.9197

TEXAS BOARD OF PROFESSIONAL ENGINEERS
CERTIFICATE OF REGISTRATION # F-11852

PRODUCT: SOFT-LITE WINDOWS

PART OR ASSEMBLY: BUCK & FRAME ANCHORING

NO.	DATE	REVISIONS	BY

DATE: 11/19/15
SCALE: N.T.S.
DWG. BY: JK
CHK. BY: LFS
DRAWING NO.: TX-4587
SHEET 3 OF 4

© 2015 R.W. BUILDING CONSULTANTS INC.

R:\Clients\Soft-Lite Permanent\B - Texas Dept of Ins\TDI - WIN XXX - Horizontal Sliding Window 5300 DSL53 (G5352) Impact Job 93\Drawings\TX-4587.dwg, 3.1

BILL OF MATERIALS

ITEM #	DESCRIPTION	MATERIAL
B	2X FRAMING (SG >= 0.42)	WOOD
C	1/4" MAX. SHIM SPACE	-
D	1/4" X 2-3/4" PFH ITW CONCRETE SCREW	STEEL
E	MASONRY - 3,000 PSI MIN. CONCRETE CONFORMING TO ACI 301 OR HOLLOW BLOCK CONFORMING TO ASTM C90	CONCRETE
H	#10 X 3" PPH SMS (1-1/4" MIN. EMBEDMENT)	STEEL
1	FRAME*	PVC
5	KEEPER HANDLE STILE*	PVC
6	KEEPER STILE*	PVC
7	LOCK STILE*	PVC
8	PLAIN RAIL*	PVC
9	GLAZING BEAD*	PVC
10	REINFORCEMENT (6065-T5 ALUM)	ALUM.
11	SLIDER TRACK	PVC
20	LOCK	-
21	LOCK KEEPER	-
23	#7 X 3/8" PFH MS (KEEPER SCREWS)	STEEL
26	#6 X 1" PFH TEK (LOCK SCREWS)	STEEL
27	WEATHERSTRIP (0.250" SINGLE FIN PILE)	-
28	WEATHERSTRIP (0.350" SINGLE FIN PILE)	-
29	INTERLOCK WEATHERSTRIP GROOVE	PVC

* THE APPROVED WHITE RIGID PVC EXTERIOR EXTRUSIONS FOR WINDOWS ARE TO BE PRODUCED BY EXTRUDERS LICENSEES IN "AAMA CERTIFICATIONS PROGRAMS FOR RIGID PVC EXTRUSIONS".

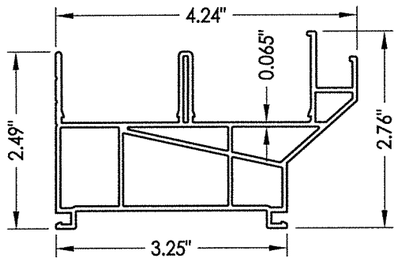

1 HEAD AND JAMB

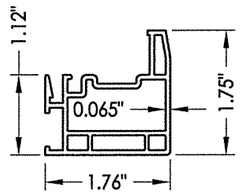

7 LOCK STILE

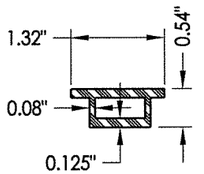

10 REINFORCEMENT

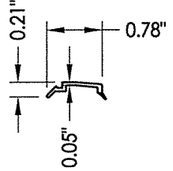

9 GLAZING BEAD

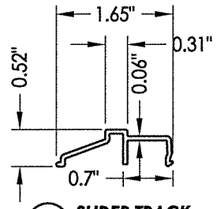

11 SLIDER TRACK

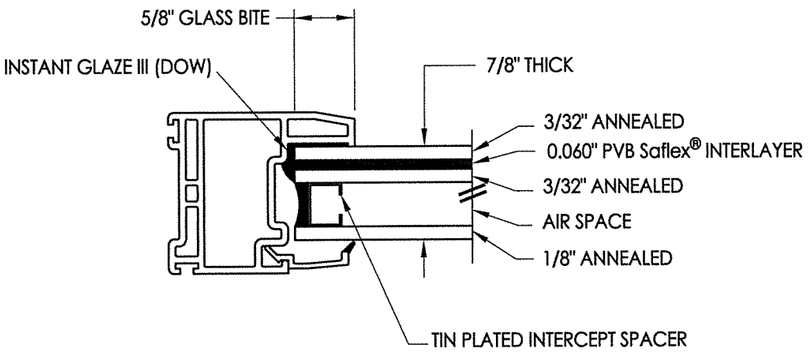

G1 GLAZING DETAIL

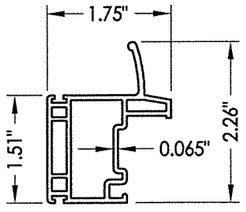

5 KEEPER HANDLE STILE

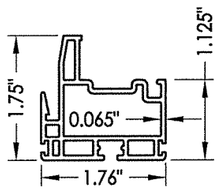

6 KEEPER STILE

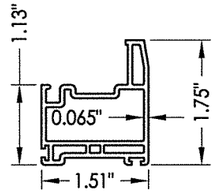

8 PLAIN RAIL

Documents Prepared By: Lyndon F. Schmidt, P.E.
TEXAS P.E. #104123

R.W. BUILDING CONSULTANTS, INC.
P.O. Box 230 Valrico FL 33595
Phone No.: 813.659.9197

TEXAS BOARD OF PROFESSIONAL ENGINEERS
CERTIFICATE OF REGISTRATION # F-11852

STATE OF TEXAS · LYNDON F. SCHMIDT · 104123 · LICENSED PROFESSIONAL ENGINEER

PRODUCT: SOFT-LITE WINDOWS

PART OR ASSEMBLY: BILL OF MATERIALS, COMPONENTS AND GLAZING DETAIL

NO.	DATE	BY	REVISIONS

DATE: 11/19/15
SCALE: N.T.S.
DWG. BY: JK
CHK. BY: LFS
DRAWING NO.: TX-4587
SHEET 4 OF 4

© 2015 R.W. BUILDING CONSULTANTS INC.

R:\Clients\Soft-Lite Permanent\B - Texas Dept of Ins\TDI - WIN XXX - Horizontal Sliding Window 5300 DSL53 (G5352) Impact Job 93\Drawings\TX-4587.dwg, 4.1