| REVISIONS | | | |
|---|---|---|---|
| REV | DESCRIPTION | DATE | APPROVED |

NOTES:

1. THE PRODUCT SHOWN HEREIN IS DESIGNED AND MANUFACTURED TO COMPLY WITH REQUIREMENTS OF THE 2006 IBC AND IRC WITH STATE OF TEXAS MODIFICATIONS.
2. WOOD FRAMING AND MASONRY OPENING TO BE DESIGNED AND ANCHORED TO PROPERLY TRANSFER ALL LOADS TO STRUCTURE. FRAMING AND MASONRY OPENING IS THE RESPONSIBILITY OF THE ARCHITECT OR ENGINEER OF RECORD.
3. 1X BUCK OVER MASONRY/CONCRETE IS OPTIONAL.
4. WHERE SHIM OR BUCK THICKNESS IS LESS THAN 1–1/2" WINDOW UNITS MUST BE ANCHORED THROUGH THE FRAME IN ACCORDANCE WITH MANUFACTURER'S PUBLISHED INSTALLATION INSTRUCTIONS. ANCHORS SHALL BE SECURELY FASTENED DIRECTLY INTO MASONRY, CONCRETE OR OTHER STRUCTURAL SUBSTRATE MATERIAL.
5. WHERE WOOD BUCK THICKNESS IS 1–1/2" OR GREATER, BUCK SHALL BE SECURELY FASTENED TO MASONRY, CONCRETE OR OTHER STRUCTURAL SUBSTRATE. WINDOW UNITS MAY BE ANCHORED THROUGH FRAME TO SECURED WOOD BUCK IN ACCORDANCE WITH MANUFACTURER'S PUBLISHED INSTALLATION INSTRUCTIONS.
6. WHERE 1X BUCK IS NOT USED DISSIMILAR MATERIALS MUST BE SEPARATED WITH APPROVED COATING OR MEMBRANE. SELECTION OF COATING OR MEMBRANE IS THE RESPONSIBILITY OF THE ARCHITECT OR ENGINEER OF RECORD.
7. BUCKS SHALL EXTEND BEYOND WINDOW INTERIOR FACE SO THAT FULL FRAME SUPPORT IS PROVIDED.
8. SHIM AS REQUIRED AT EACH ANCHOR LOCATION WITH LOAD BEARING SHIM. SHIM WHERE SPACE OF 1/16" OR GREATER OCCURS. MAXIMUM ALLOWABLE SHIM STACK TO BE 1/4".
9. SHIMS SHALL BE LOCATED, APPLIED AND MADE FROM MATERIALS AND THICKNESS CAPABLE OF SUSTAINING APPLICABLE LOADS.
10. WIND LOAD DURATION FACTOR Cd=1.6 WAS USED FOR WOOD ANCHOR CALCULATIONS.
11. FRAME MATERIAL: EXTRUDED RIGID PVC.
12. UNITS MUST BE GLAZED PER ASTM E1300–04, SEE SHEET 2 FOR GLASS DETAILS.
13. APPROVED IMPACT PROTECTIVE SYSTEM <u>IS NOT REQUIRED</u> FOR THIS PRODUCT IN WIND BORNE DEBRIS REGIONS.
14. FOR ANCHORING INTO WOOD FRAMING OR 2X BUCK USE #10 WOOD SCREWS WITH SUFFICIENT LENGTH TO ACHIEVE A 1 3/8" MINIMUM EMBEDMENT INTO SUBSTRATE. LOCATE ANCHORS AS SHOWN IN ELEVATIONS AND INSTALLATION DETAILS.
15. FOR ANCHORING INTO MASONRY/CONCRETE USE 3/16" TAPCONS WITH SUFFICIENT LENGTH TO ACHIEVE A 1 1/4" MINIMUM EMBEDMENT INTO SUBSTRATE WITH 2 1/2'' MINIMUM EDGE DISTANCE. LOCATE ANCHORS AS SHOWN IN ELEVATIONS AND INSTALLATION DETAILS.
16. FOR ANCHORING INTO METAL STRUCTURE USE #10 SMS OR SELF DRILLING SCREWS WITH SUFFICIENT LENGTH TO ACHIEVE 3 THREADS MINIMUM BEYOND STRUCTURE INTERIOR WALL. LOCATE ANCHORS AS SHOWN IN ELEVATIONS AND INSTALLATION DETAILS.
17. ALL FASTENERS TO BE CORROSION RESISTANT.
18. INSTALLATION ANCHORS SHALL BE INSTALLED IN ACCORDANCE WITH ANCHOR MANUFACTURER'S INSTALLATION INSTRUCTIONS AND ANCHORS SHALL NOT BE USED IN SUBSTRATES WITH STRENGTHS LESS THAN THE MINIMUM STRENGTH SPECIFIED BELOW:
    A. WOOD – MINIMUM SPECIFIC GRAVITY OF G=0.42
    B. CONCRETE – MINIMUM COMPRESSIVE STRENGTH OF 3,192 PSI.
    C. MASONRY – STRENGTH CONFORMANCE TO ASTM C–90, GRADE N, TYPE 1 (OR GREATER).
    D. METAL STRUCTURE: STEEL 18GA, 33KSI OR ALUMINUM 6063–T5 1/8" THICK MINIMUM

*SIGNED: 11/05/2014*

TABLE OF CONTENTS


| SHEET NO. | DESCRIPTION |
|---|---|
| 1 | NOTES |
| 2 | ELEVATION, ANCHORING AND GLASS DETAILS. |
| 3 – 4 | INSTALLATION DETAILS |


REGENCY PLUS, INC.
2000 LOCUST GAP HIGHWAY
MT CARMEL, PA 17851

SERIES 6714 IMPACT RATED VINYL TILT SINGLE HUNG WINDOW – 40" X 96"
NOTES

| DRAWN: | DWG NO. | REV |
|---|---|---|
| N.G. | 08–02521 | – |

| SCALE | DATE | SHEET |
|---|---|---|
| NTS | 11/04/14 | 1 OF 4 |

Luis R. Lomas P.E.
TX No.: 101889

| REVISIONS | | | |
|---|---|---|---|
| REV | DESCRIPTION | DATE | APPROVED |

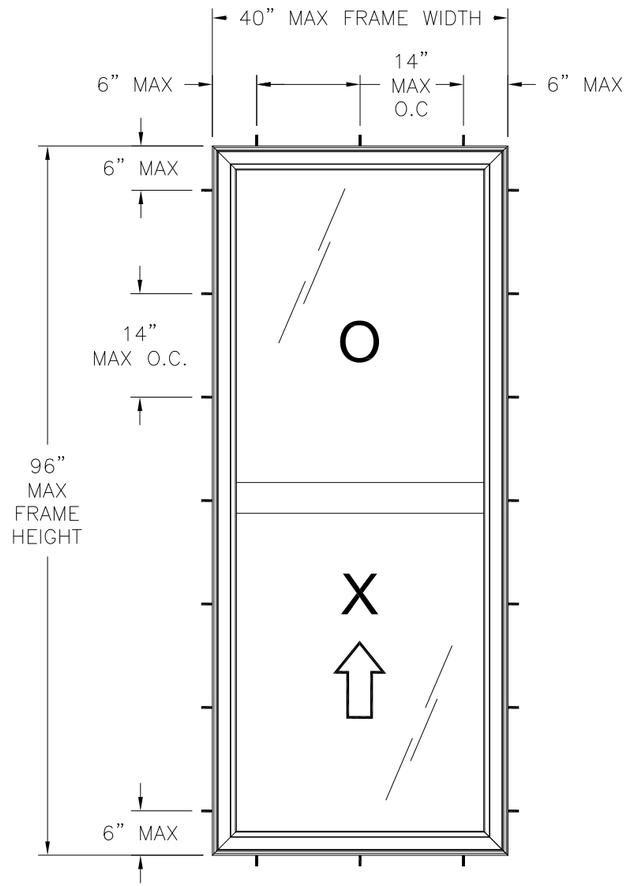


*SERIES 6714 IMPACT RATED VINYL TILT SINGLE HUNG WINDOW*

*EXTERIOR VIEW*

| *DESIGN PRESSURE RATING* | *IMPACT RATING* |
|---|---|
| *±50.0PSF* | *LARGE AND SMALL MISSILE IMPACT* |

*MISSILE LEVEL D, WIND ZONE 4*

| ***HARDWARE SCHEDULE*** | |
|---|---|
| A. | (2) METAL CAM-TYPE SWEEP LOCK 8 1/2" FROM EACH END ACTIVE MEETING RAIL |
| B. | (2) METAL KEEPER IN EXTERIOR MEETING RAIL AT LOCK POSITIONS |
| C. | (1) 4-COIL SPRING BALANCE SYSTEM AT EACH JAMB TRACK |
| D. | (1) DIE-CAST PIVOT BAR AT EACH END OF BOTTOM RAIL |
| E. | (1) STEEL BAR REINFORCEMENT AT STILES |
| F. | (1) GALVANIZED STEEL TUBE AT RAILS |

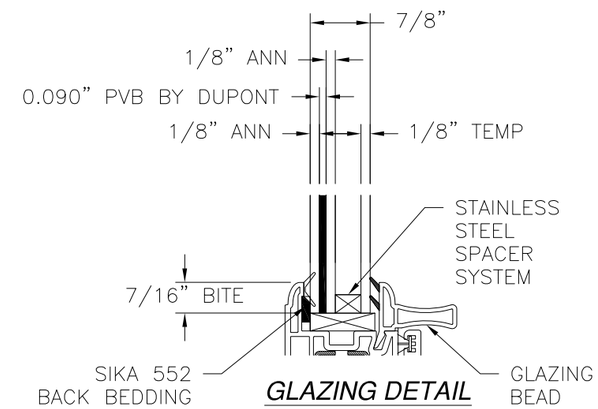


*GLAZING DETAIL*

*SIGNED: 11/05/2014*

NOTES:
1. MAXIMUM PANEL SIZE: 37 3/16" X 46 15/16"
2. MAXIMUM D.L.O.: 34 5/8" X 43 3/4"
3. 1" X 1/4" WEEP HOLES LOCATED AT SILL FACE 1 1/2" FROM EACH END.
4. 1 1/4" X 5/16" WEEP HOLE WITH PLASTIC COVER LOCATED AT EXTERIOR SILL FACE 3 1/2" FROM EACH END.

REGENCY PLUS, INC.
2000 LOCUST GAP HIGHWAY
MT CARMEL, PA 17851

SERIES 6714 IMPACT RATED VINYL TILT SINGLE HUNG WINDOW – 40" X 96" ELEVATION

| DRAWN: | DWG NO. | REV |
|---|---|---|
| N.G. | 08-02521 | – |
| SCALE NTS | DATE 11/04/14 | SHEET 2 OF 4 |

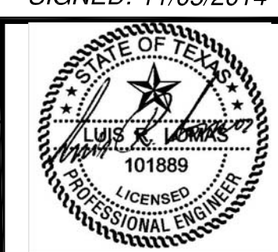


Luis R. Lomas P.E.
TX No.: 101889

| REVISIONS | | | |
|---|---|---|---|
| REV | DESCRIPTION | DATE | APPROVED |

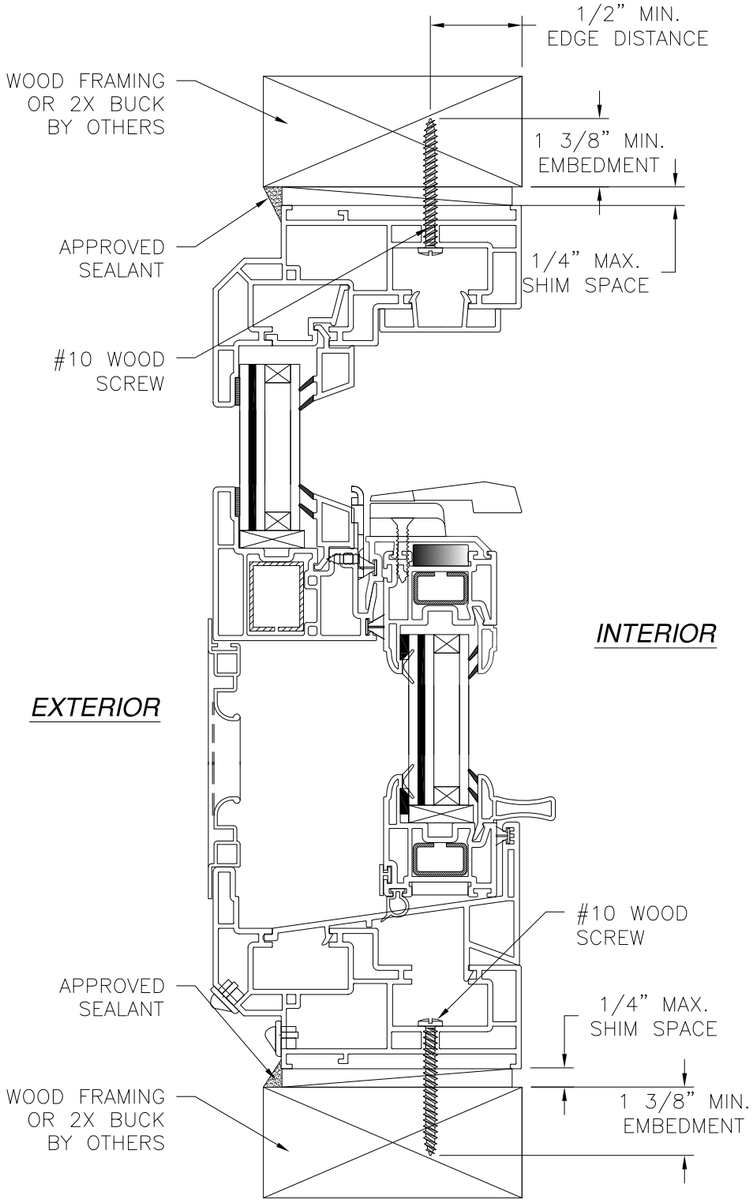


VERTICAL CROSS SECTION

WOOD FRAMING OR 2X BUCK INSTALLATION

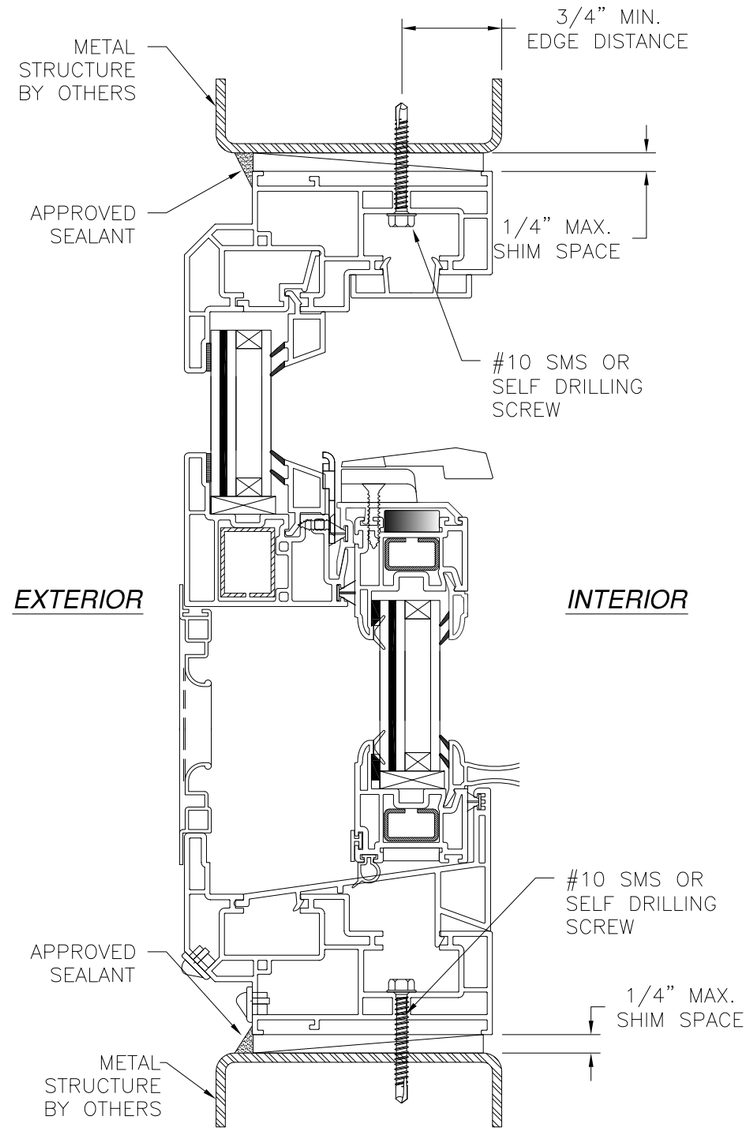


VERTICAL CROSS SECTION

METAL STRUCTURE INSTALLATION

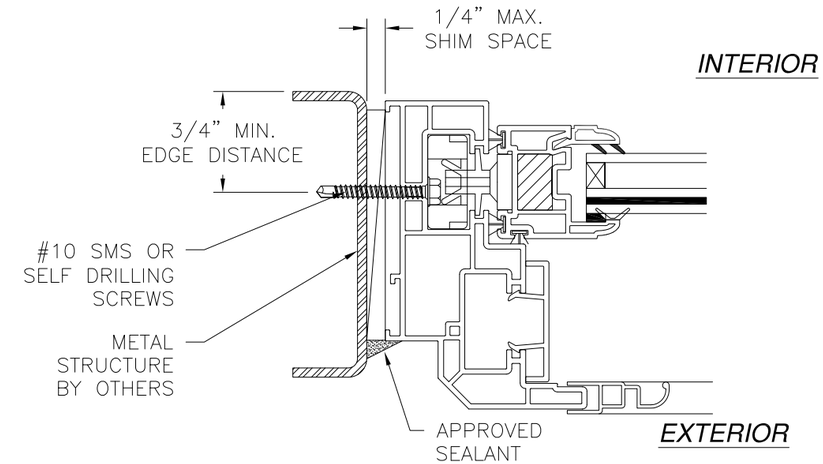


JAMB INSTALLATION DETAIL

METAL STRUCTURE INSTALLATION

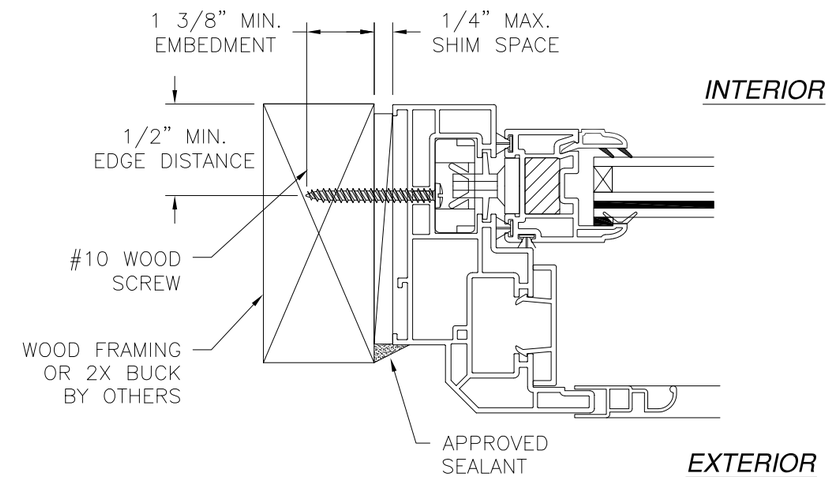


JAMB INSTALLATION DETAIL

WOOD FRAMING OR 2X BUCK INSTALLATION

SIGNED: 11/05/2014

NOTES:
1. INTERIOR AND EXTERIOR FINISHES, BY OTHERS, NOT SHOWN FOR CLARITY.
2. PERIMETER AND JOINT SEALANT BY OTHERS TO BE DESIGNED IN ACCORDANCE WITH ASTM E2112

REGENCY PLUS, INC.
2000 LOCUST GAP HIGHWAY
MT CARMEL, PA 17851

SERIES 6714 IMPACT RATED VINYL TILT
SINGLE HUNG WINDOW – 40" X 96"
INSTALLATION DETAILS

| DRAWN: N.G. | DWG NO. 08-02521 | REV – |
|---|---|---|
| SCALE NTS | DATE 11/04/14 | SHEET 3 OF 4 |

STATE OF TEXAS
LUIS R. LOMAS
101889
LICENSED
PROFESSIONAL ENGINEER

Luis R. Lomas P.E.
TX No.: 101889

| REVISIONS | | | |
|---|---|---|---|
| REV | DESCRIPTION | DATE | APPROVED |

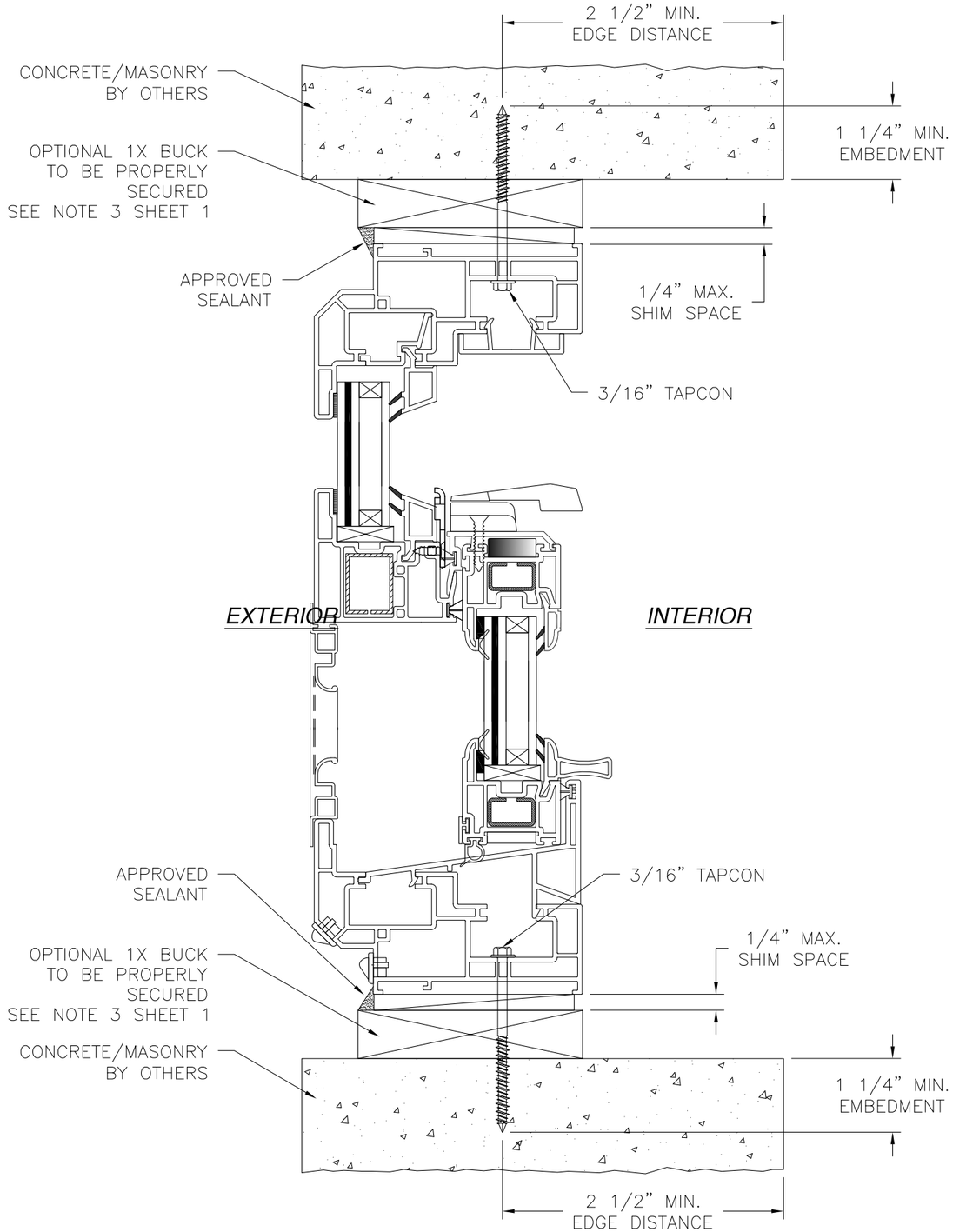


*VERTICAL CROSS SECTION*

*CONCRETE/MASONRY INSTALLATION*

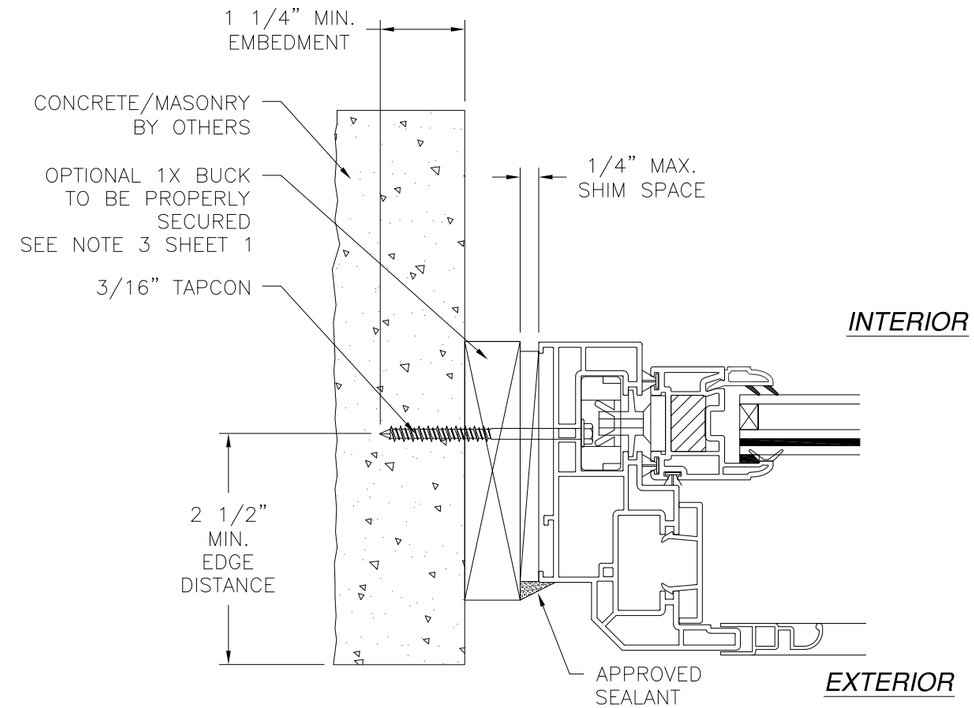


*JAMB INSTALLATION DETAIL*

*CONCRETE/MASONRY INSTALLATION*

*NOTES:*
*1. INTERIOR AND EXTERIOR FINISHES, BY OTHERS, NOT SHOWN FOR CLARITY.*
*2. PERIMETER AND JOINT SEALANT BY OTHERS TO BE DESIGNED IN ACCORDANCE WITH ASTM E2112*

*SIGNED: 11/05/2014*

REGENCY PLUS, INC.
2000 LOCUST GAP HIGHWAY
MT CARMEL, PA 17851

SERIES 6714 IMPACT RATED VINYL TILT
SINGLE HUNG WINDOW – 40" X 96"
INSTALLATION DETAILS

| DRAWN: | DWG NO. | REV |
|---|---|---|
| N.G. | 08–02521 | – |
| SCALE NTS | DATE 11/04/14 | SHEET 4 OF 4 |

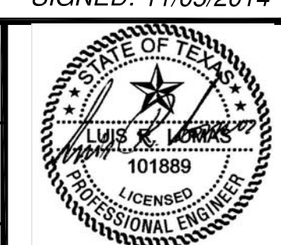


Luis R. Lomas P.E.
TX No.: 101889