NX3800 - FIXED WINDOW (NON-IMPACT)

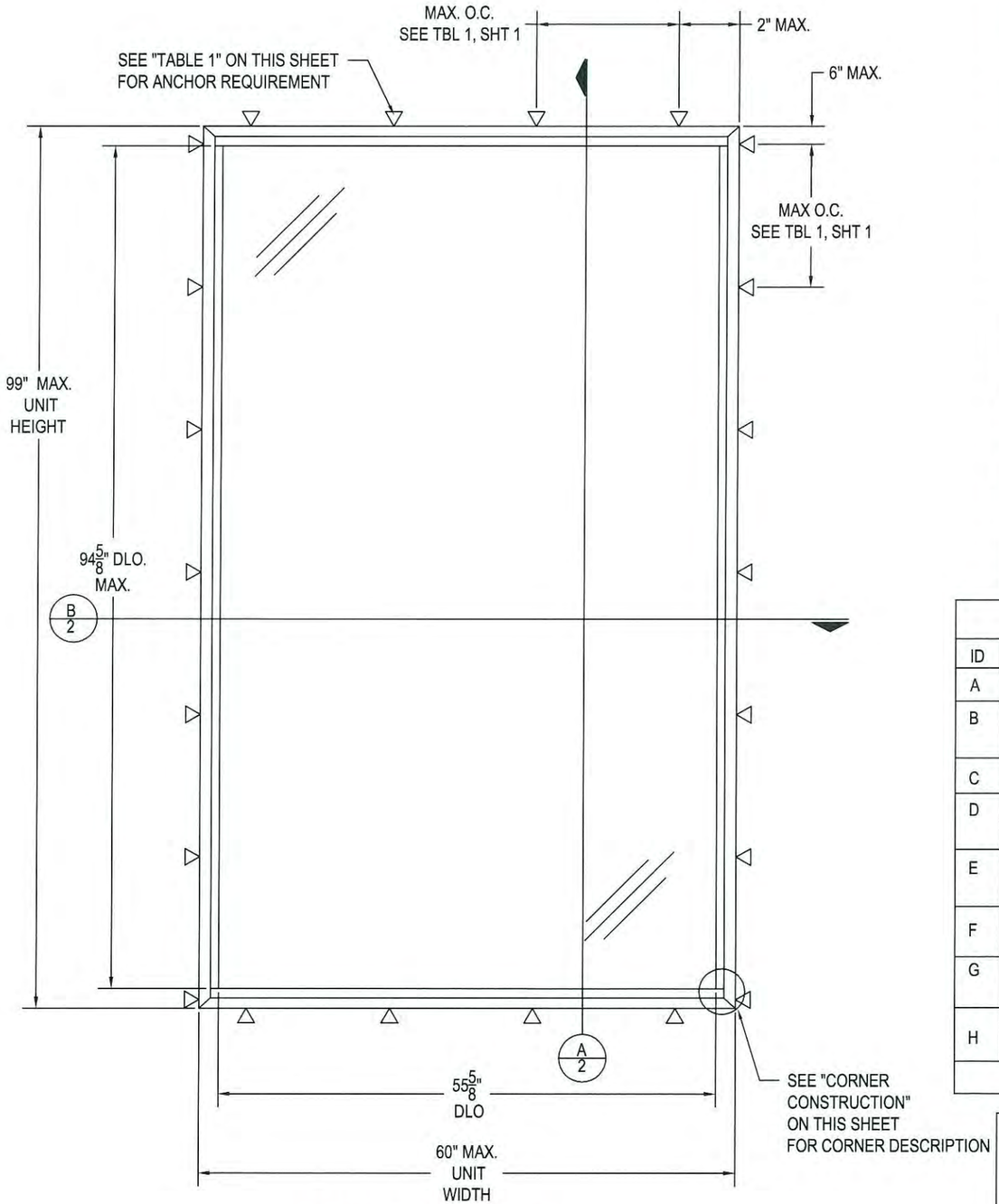

B FIXED WINDOW ELEVATION
SCALE: 3/4"- 0" = 1'- 0"

DESIGN PRESSURE = +80/- 80 PSF

GENERAL NOTES

1. THIS PRODUCT HAS BEEN TESTED TO AAMA/WDMA/CSA 101/I.S.2/A440-08, AND MEETS THE REQUIREMENTS OF THE 2006 INTERNATIONAL BUILDING CODE AND INTERNATIONAL RESIDENTIAL CODE, WITH 2006 TEXAS REVISIONS EFFECTIVE JANUARY 1, 2008.
2. THIS PRODUCT, FABRICATED, GLAZED, AND ANCHORED AS DETAILED IN THIS DRAWING, IS NON-IMPACT AND REQUIRES THE USE OF SHUTTERS IN WINDBORNE DEBRIS REGIONS.
3. ALLOWABLE CONFIGURATION: O (SINGLE FIXED LITE)
4. THE DESIGN PRESSURE RATINGS IN THIS DRAWING ARE AS LIMITED BY ASTM E-1300-04 GLASS TABLES, AND TESTED PRESSURES.
5. DISSIMILAR MATERIALS THAT COME INTO CONTACT, INCLUDING BUT NOT LIMITED TO PRESSURE TREATED WOOD BUCKS, SHALL BE COATED OR OTHERWISE PROTECTED PER IBC/IRC REQUIREMENTS TO PREVENT GALVANIC REACTIONS.
6. SEALING AND FLASHING STRATEGIES FOR OVERALL WATER INFILTRATION RESISTANCE SHALL BE THE RESPONSIBILITY OF OTHERS.
7. THE 4/3 ALLOWABLE STRESS INCREASE HAS NOT BEEN USED IN THE ANCHOR ANALYSIS FOR THIS SYSTEM. THE 1.6 Cd FACTOR WAS USED IN THE ANALYSIS OF WOOD SUBSTRATE.
8. STRUCTURAL INTEGRITY OF SUBSTRATE MATERIALS TO RECEIVE THE LOADS FROM THIS PRODUCT, AND INSTALLATION OF WOOD BUCKS TO THE SUBSTRATE, TO BE ENGINEERED BY OTHERS OR AS APPROVED BY THE AUTHORITY HAVING JURISDICTION.
9. THIS PRODUCT SHALL BE INSTALLED USING ONE OF THE APPROVED FASTENERS IN TABLE 1 APPROPRIATE FOR THE SUBSTRATE TYPE, AT THE MINIMUM SPACING SHOWN IN THE ELEVATION VIEW ON THIS PAGE.
10. MINIMUM ANCHOR EMBEDMENTS LISTED IN TABLE 1 SHALL BE BEYOND WALL DRESSING OR STUCCO AND FULLY INTO SUBSTRATE.
11. SUBTRATES SHALL MEET THE MINIMUM STRENGTH REQUIREMENTS AS SHOWN IN TABLE 1. CONCRETE OR MASONRY SUBSTRATES SHALL NOT BE CRACKED. FOR INSTALLATION TO METAL SUBSTRATES, ANCHORS SHALL BE LONG ENOUGH TO BE FULLY THREADED THROUGH THE METAL THICKNESS WITH AN ADDITIONAL 3/16" MIN. OF THREADS BEYOND.

TABLE 1: INSTALLATION ANCHOR REQUIREMENTS TABLE

ID	SUBSTRATE TYPE	ANCHOR TYPE	MIN. EMBED	MIN. EDGE DIST.	MAX. O.C. DIST.
A	CONCRETE (2.0 KSI MIN)	1/4" ITW TAPCON	1 1/2"	1 1/2"	12"
B	HOLLOW OR GROUT-FILLED CMU (117 PCF MIN.)	1/4" ITW TAPCON	1"	2"	12"
C	CONCRETE (2.85 KSI MIN.)	1/4" ELCO ULTRACON	1 3/8"	1"	12"
D	HOLLOW OR GROUT-FILLED CMU (ASTM C90)	1/4" ELCO ULTRACON	1-1/4"	2 1/2"	12"
E	2X MIN. SPRUCE-PINE-FIR WOOD (G=0.42)	1/4" ELCO ULTRACON	1-3/8"	1"	9 7/8"
F	2X MIN. SPRUCE-PINE-FIR WOOD (G=0.42)	#12 WOOD SCREW	1-3/8"	1"	9 7/8"
G	16 GAUGE (0.060") MIN. STEEL STUD 33KSI YIELD MIN.	#12-24 ITW TEKS SELF-DRILLING SCREW	SEE NOTE 11	1/2"	9 7/8"
H	1/8" ALUM. 6063-T5 MIN. OR 1/8" STEEL 36 KSI MIN.	#12 GRADE 5 SELF-TAPPING/ DRILLING SCREW	SEE NOTE 11	1/2"	9 7/8"
INSTALL ONE ANCHOR PER LOCATION INDICATED IN ELEVATION VIEW					

CORNER CONSTRUCTION:

FRAME : VERTICAL AND HORIZONTAL MEMBERS ARE MITERED, JOINED, AND CRIMPED TOGETHER WITH CORNER KEYS. JOINTS ARE SEALED WITH SEALANT.

REV.	DATE	DESCRIPTION	BY

E.C. NO. xxxxx-xx XX/XX/XX

5/15/2013

ROBERT L. CLARK, TX P.E. #74072
823 HARROWOOD CT
SARASOTA, FL PH. 941-504-0619

STATE OF TEXAS
ROBERT L. CLARK
74072
REGISTERED
PROFESSIONAL ENGINEER

TRACO
A DIVISION OF KAWNEER
71 PROGRESS AVENUE
CRANBERRY TOWNSHIP, PA 16066
PHONE (724) 776-7000
FAX (724) 776-7114

NX-3800 - FIXED WINDOW
NON-IMPACT

SCALE: NONE

DRAWN BY YSE

DATE 05/23/12

DRWG. NO. I-NX3800-001

SHEET 1 OF 03

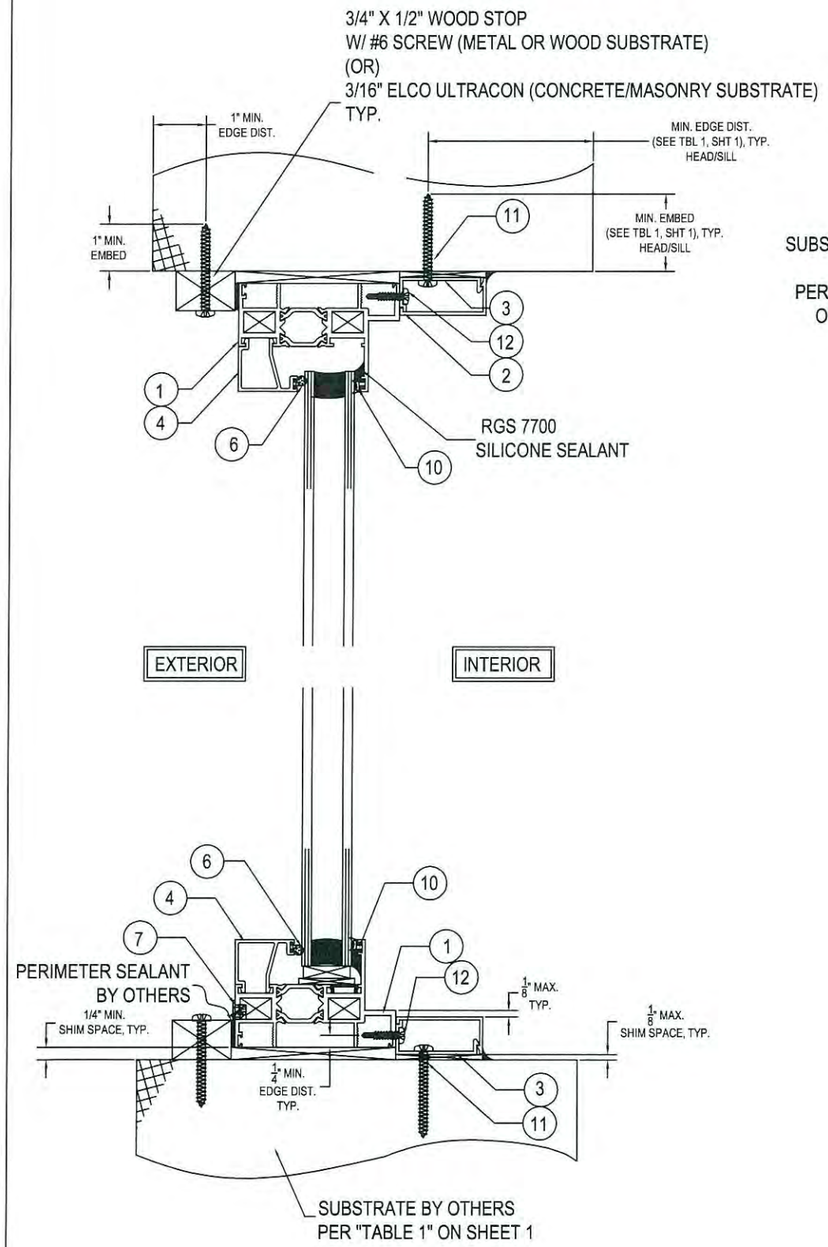

A VERTICAL SECTION
SCALE 3/4"-0" = 1'- 0"

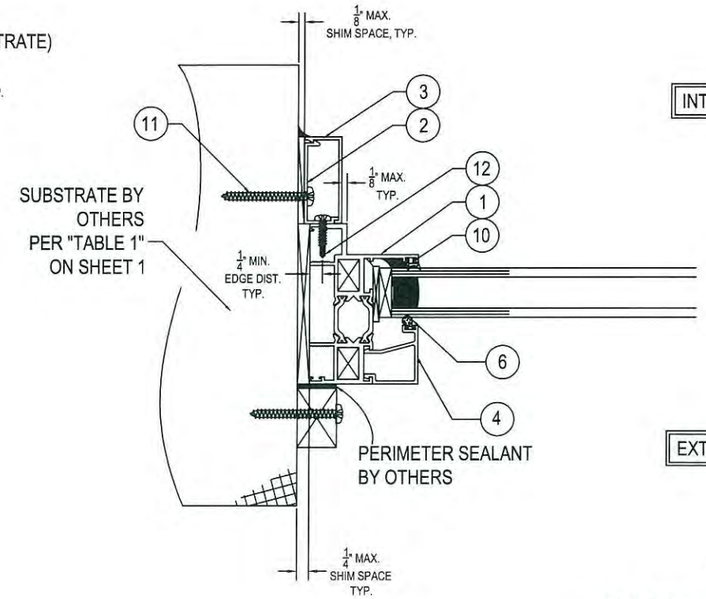

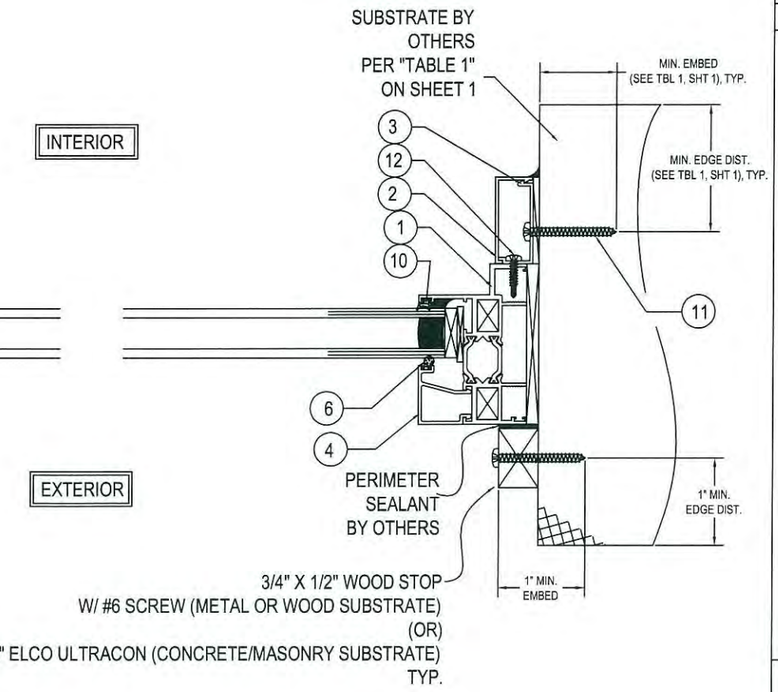

B HORIZONTAL SECTION
SCALE 3/4"-0" = 1'- 0"

GLAZING NOTES: UNITS MUST BE GLAZED WITH 1" INSULATED GLASS UNIT CONSISTING OF (2)3/16" CLEAR TEMPERED LITES AND 5/8" BUTYL SPACER

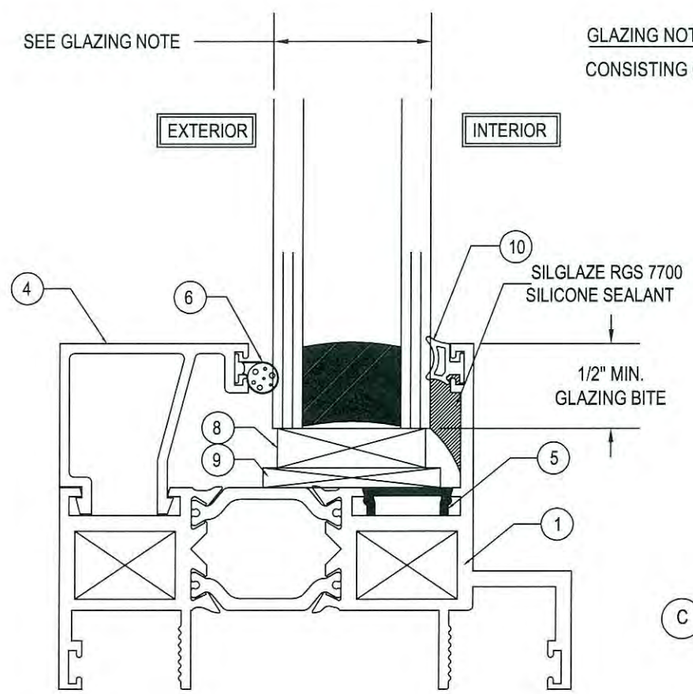

C GLAZING DETAIL
SCALE 3/4"-0" = 1'- 0"

REV.	DATE	DESCRIPTION	BY

E.C. NO. xxxxx-xx XX/XX/XX

5/15/2013

ROBERT L. CLARK, TX P.E. #74072
823 HARROWOOD CT
SARASOTA, FL PH. 941-504-0619

STATE OF TEXAS
ROBERT L. CLARK
74072
REGISTERED PROFESSIONAL ENGINEER

TRACO
A DIVISION OF KAWNEER
71 PROGRESS AVENUE
CRANBERRY TOWNSHIP, PA 16066
PHONE (724) 776-7000
FAX (724) 776-7114

NX-3890 - FIXED WINDOW
NON-IMPACT

SCALE: NONE

DRAWN BY YSE
DATE 05/23/12
DRWG. NO. I-NX3800-002
SHEET 2 OF 03

MATERIAL PARTS LIST

ITEM#	PART #	DESCRIPTION	MATERIAL
		EXTRUSIONS	
1	IF-1105	P.O. MASTER FRAME - 3 1/4"	6063-T6 ALUMINUM
2	S-1542	#30 TRIM	6063-T6 ALUMINUM
3	S-1543	#30 CLIP	6063-T6 ALUMINUM
4	S-4945	GLAZING BEAD-FIXED	6063-T6 ALUMINUM
		GASKET & MISC. PARTS	
5	20-0730-16	EURO GROOVE FILLER	PVC
6	20-4069	OFFSET BULB, 0.275 DIA	FOAM FILLED BULB
7	30-3886	WEEP COVER	NYLON 69
8	20-6110	1/4" x 1" x 4" SETTING BLOCK	SILICONE
9	20-6111	1/8" x 1 1/8" x 4" SETTING BLOCK	SILICONE
10	20-4246	SILICONE GLAZING GASKET	SILICONE
11	-	ANCHOR	410 STAINLESS STEEL
12	15-0111	#8-18 X 3/4" PPH "TEK" SS	410 STAINLESS STEEL

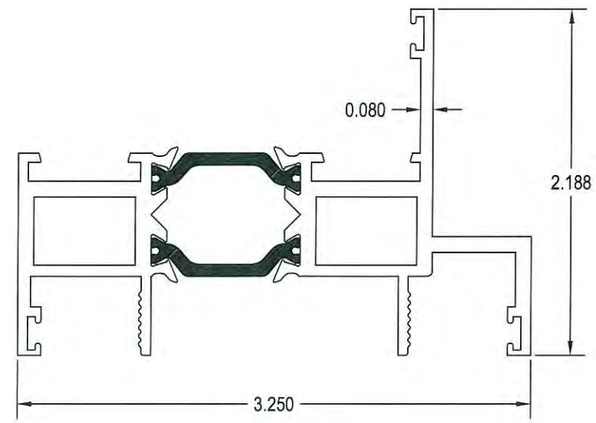

1 P.O. MASTER FRAME
SCALE 1:1

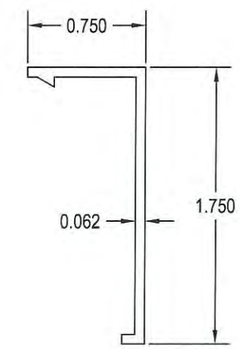

2 #30 TRIM
SCALE 1:1

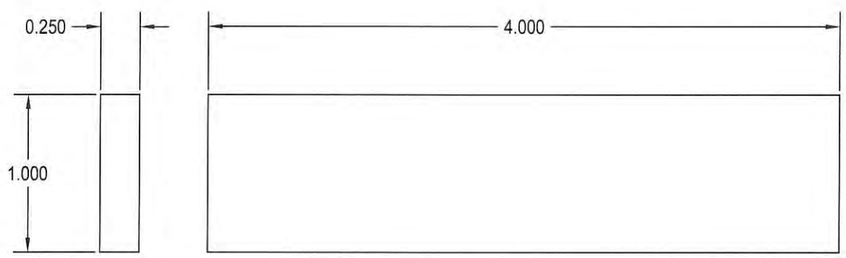

8 1/4" x 1" x 4" SETTING BLOCK
SCALE 1:1

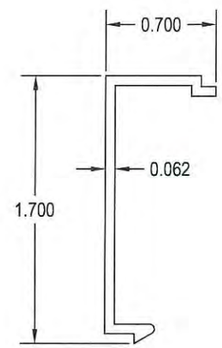

3 #30 CLIP
SCALE 1:1

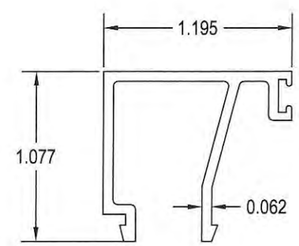

4 GLAZING BEAD - FIXED
SCALE 1:1

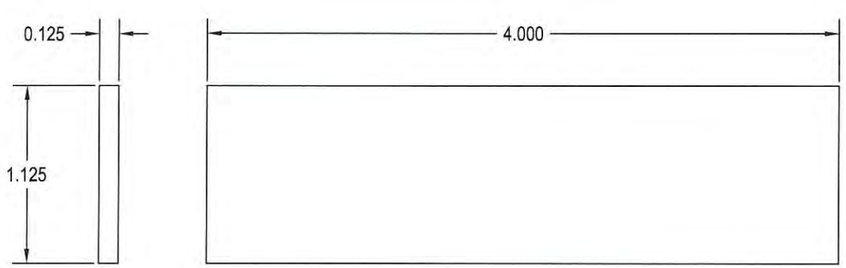

9 1/8" x 1 1/8" x 4" SETTING BLOCK
SCALE 1:1

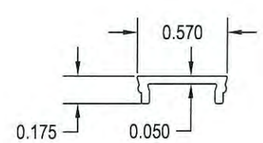

5 EURO GROOVE FILLER
SCALE 1:1

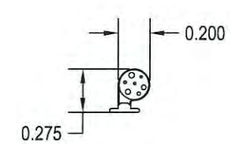

6 OFFSET BULB, 0.275 DIA
SCALE 1:1

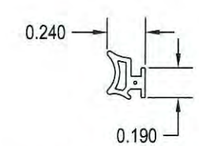

10 SILICONE GLAZING GASKET
SCALE 1:1

REV.	DATE	DESCRIPTION	BY

E.C. NO. xxxxx-xx XX/XX/XX

5/15/2013

ROBERT L. CLARK, TX P.E. #74072
823 HARROWOOD CT
SARASOTA, FL PH. 941-504-0619

STATE OF TEXAS
ROBERT L. CLARK
74072
REGISTERED
PROFESSIONAL ENGINEER

TRACO
A DIVISION OF KAWNEER
71 PROGRESS AVENUE
CRANBERRY TOWNSHIP, PA 16066
PHONE (724) 776-7000
FAX (724) 776-7114

NX-3800 - FIXED WINDOW
NON-IMPACT

SCALE: NONE

DRAWN BY: YSE
DATE: 05/23/12
DRWG. NO.: I-NX3800-003
SHEET: 3 OF 03