REVISIONS			
REV	DESCRIPTION	DATE	APPROVED

NOTES:

1) THE PRODUCT SHOWN HEREIN IS DESIGNED AND MANUFACTURED TO COMPLY WITH REQUIREMENTS OF THE 2006 IBC AND 2006 IRC WITH STATE OF TEXAS MODIFICATIONS.
2) WOOD FRAMING AND MASONRY OPENING TO BE DESIGNED AND ANCHORED TO PROPERLY TRANSFER ALL LOADS TO STRUCTURE. FRAMING AND MASONRY OPENING IS THE RESPONSIBILITY OF THE ARCHITECT OR ENGINEER OF RECORD.
3) 1X BUCK OVER MASONRY/CONCRETE IS OPTIONAL. WHERE 1X BUCK IS NOT USED DISSIMILAR MATERIALS MUST BE SEPARATED WITH APPROVED COATING OR MEMBRANE. SELECTION OF COATING OR MEMBRANE IS THE RESPONSIBILITY OF THE ARCHITECT OR ENGINEER OF RECORD.
4) ALLOWABLE STRESS INCREASE OF 1/3 WAS NOT USED IN THE DESIGN OF THE PRODUCT SHOWN HEREIN. WIND LOAD DURATION FACTOR Cd=1.6 WAS USED FOR WOOD ANCHOR CALCULATIONS.
5) FRAME MATERIAL: EXTRUDED RIGID PVC.
6) UNITS MUST BE GLAZED PER ASTM E1300-04. SEE SHEET 3 FOR GLASS OPTIONS.
7) APPROVED IMPACT PROTECTIVE SYSTEM <u>IS NOT REQUIRED</u> FOR THIS PRODUCT IN WIND BORNE DEBRIS REGIONS.
8) SHIM AS REQUIRED AT EACH INSTALLATION ANCHOR WITH LOAD BEARING SHIM. SHIM WHERE SPACE OF 1/16" OR GREATER OCCURS. MAXIMUM ALLOWABLE SHIM STACK TO BE 1/4".
9) FOR ANCHORING INTO MASONRY/CONCRETE USE 3/16" TAPCONS WITH SUFFICIENT LENGTH TO ACHIEVE A 1 1/4" MINIMUM EMBEDMENT INTO SUBSTRATE WITH 2 1/2" MINIMUM EDGE DISTANCE. LOCATE ANCHORS AS SHOWN IN ELEVATIONS AND INSTALLATION DETAILS.
10) FOR ANCHORING INTO WOOD FRAMING OR 2X BUCK USE #10 WOOD SCREWS WITH SUFFICIENT LENGTH TO ACHIEVE A 1 3/8" MINIMUM EMBEDMENT INTO SUBSTRATE. LOCATE ANCHORS AS SHOWN IN ELEVATIONS AND INSTALLATION DETAILS.
11) FOR ANCHORING INTO METAL STRUCTURE USE #10 SMS OR SELF DRILLING SCREWS SCREWS WITH SUFFICIENT LENGTH TO ACHIEVE 3 THREADS MINIMUM BEYOND STRUCTURE INTERIOR WALL. LOCATE ANCHORS AS SHOWN IN ELEVATIONS AND INSTALLATION DETAILS.
12) ALL FASTENERS TO BE CORROSION RESISTANT.
13) INSTALLATION ANCHORS SHALL BE INSTALLED IN ACCORDANCE WITH ANCHOR MANUFACTURER'S INSTALLATION INSTRUCTIONS, AND ANCHORS SHALL NOT BE USED IN SUBSTRATES WITH STRENGTHS LESS THAN THE MINIMUM STRENGTH SPECIFIED BELOW:
    A. WOOD – MINIMUM SPECIFIC GRAVITY OF G=0.42
    B. CONCRETE – MINIMUM COMPRESSIVE STRENGTH OF 3,192 PSI.
    C. MASONRY – STRENGTH CONFORMANCE TO ASTM C-90, GRADE N, TYPE 1 (OR GREATER).
    D. METAL STRUCTURE: STEEL 18GA, 33KSI OR ALUMINUM 6063-T5 1/8" THICK MINIMUM

SIGNED: 07/23/2013

TABLE OF CONTENTS

SHEET NO.	DESCRIPTION
1	NOTES
2	ELEVATION, ANCHORING
3	CROSS SECTIONS AND B.O.M.
4 – 7	INSTALLATION DETAILS
8	COMPONENTS

KOLBE & KOLBE MILLWORK
1211 DEPOT STREET
MANAWA, WI 54949

WINDQUEST V707 SIDE LITE
51 X 96
NOTES

DRAWN:	DWG NO.	REV
V.L.	08-02164	–

SCALE	DATE	SHEET
NTS	07/23/13	1 OF 8

STATE OF TEXAS
LUIS R. LOMAS
101889
LICENSED
PROFESSIONAL ENGINEER

Luis R. Lomas P.E.
TX No.: 101889

REVISIONS			
REV	DESCRIPTION	DATE	APPROVED

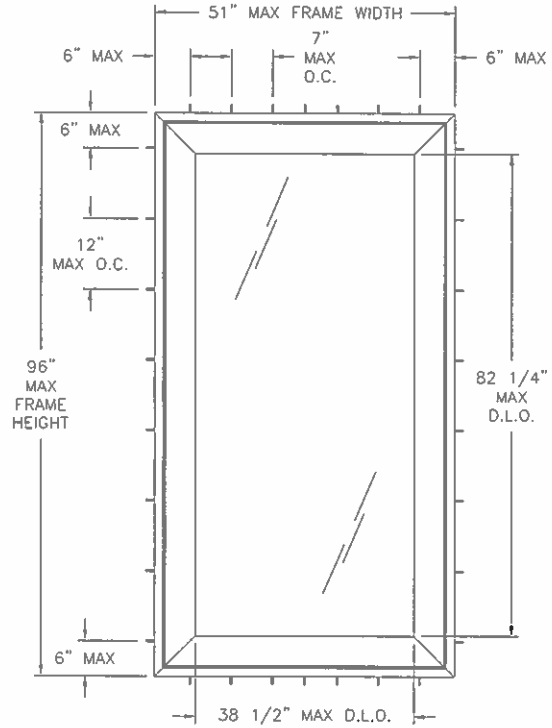

WINDQUEST V707 SIDE LITE
EXTERIOR VIEW FRAME FLUSH INSTALLATION

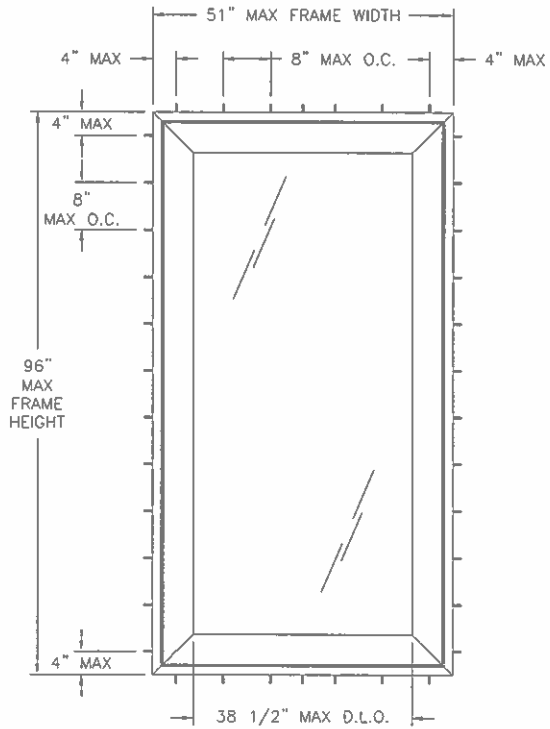

WINDQUEST V707 SIDE LITE
EXTERIOR VIEW STRAP INSTALLATION

DESIGN PRESSURE RATING	IMPACT RATING
±50PSF	LARGE MISSILE IMPACT

MISSILE LEVEL D, WIND ZONE 4

SIGNED: 07/23/2013

KOLBE & KOLBE MILLWORK
1211 DEPOT STREET
MANAWA, WI 54949

WINDQUEST V707 SIDE LITE
51 X 96
ELEVATIONS

DRAWN: V.L.	DWG NO. 08-02164	REV –
SCALE NTS	DATE 07/23/13	SHEET 2 OF 8

STATE OF TEXAS
LUIS R. LOMAS
101889
LICENSED
PROFESSIONAL ENGINEER

Luis R. Lomas P.E.
TX No.: 101889

PARTS LIST				
NO.	PART NUMBER	DESCRIPTION	MANUFACTURER	MATERIAL
1	S003C	FRAME	THERMOPLAST INC.	WHITE PVC
2	S021	1" GLAZING BEAD	THERMOPLAST INC.	WHITE PVC
3	S017	SASH	THERMOPLAST INC.	WHITE PVC
4	S008	SUPPORT BLOCK	THERMOPLAST INC.	WHITE PVC
5	S018	SILL ADAPTER	THERMOPLAST INC.	WHITE PVC
6	7059	SCREEN ADAPTER	THERMOPLAST INC.	WHITE PVC
7	.095	SASH REINFORCEMENT	THERMOPLAST INC.	ALUMINUM 6063-T5
8	110-2550-10	WEEP COVER	RO-MAN	PLASTIC
9		SETTING BLOCK (80 HARDNESS)		
10		SEALING DOW 995	DOW CORNING	
11	HF-7320-187	WEATHER STRIP	SCHLEGEL	
12	#6 X 1 1/4"	FIXED SASH SCREWS		
13	#8 X 3/4"	REINFORCEMENTS SCREWS		
14	S029	SASH STOP	THERMOPLAST INC.	WHITE PVC
15	PB-8322-187	WEATHER STRIP	SCHLEGEL	
16	4560	INSTALLATION STRIP		STEEL G60

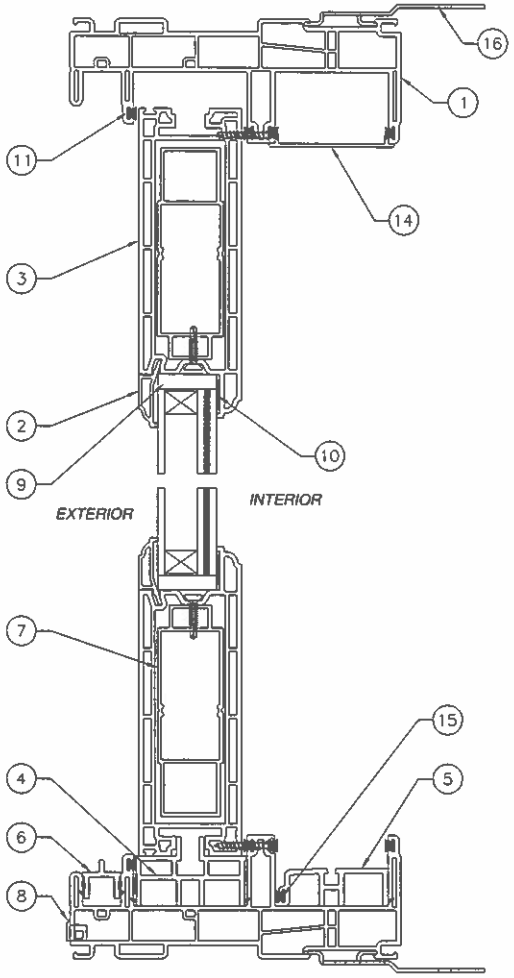

VERTICAL SECTION

REVISIONS			
REV	DESCRIPTION	DATE	APPROVED

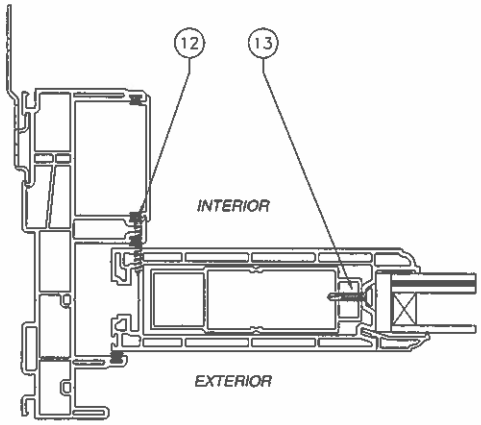

HORIZONTAL SECTION

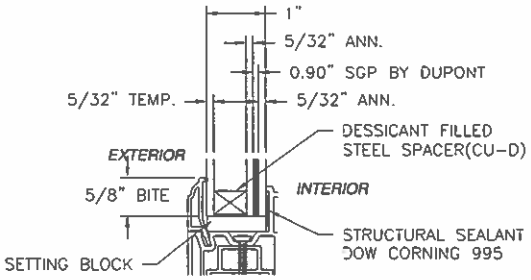

GLAZING DETAIL

WEEP HOLE LOCATIONS:
1. 1" X 3/16" HOLES LOCATED 1 1/2" FROM EACH END OF INTERIOR AND EXTERIOR SILL TRACK AND 3 1/4" FROM EACH END OF SCREEN TRACK.
2. 1 1/2" X 3/16" HOLE WITH COVER LOCATED 3 3/4" FROM EACH END OF SILL FACE.
3. 3/4" X 3/16" HOLE LOCATED 3" FROM EACH END OF BOTTOM RAIL.

SIGNED: 07/23/2013

KOLBE & KOLBE MILLWORK
1211 DEPOT STREET
MANAWA, WI 54949

WINDQUEST V707 SIDE LITE
51 X 96
CROSS SECTIONS AND B.O.M.

DRAWN:	DWG NO.	REV
V.L.	08-02164	-
SCALE NTS	DATE 07/23/13	SHEET 3 OF 8

STATE OF TEXAS
LUIS R. LOMAS
101889
LICENSED
PROFESSIONAL ENGINEER

Luis R. Lomas P.E.
TX No.: 101889

REVISIONS			
REV	DESCRIPTION	DATE	APPROVED

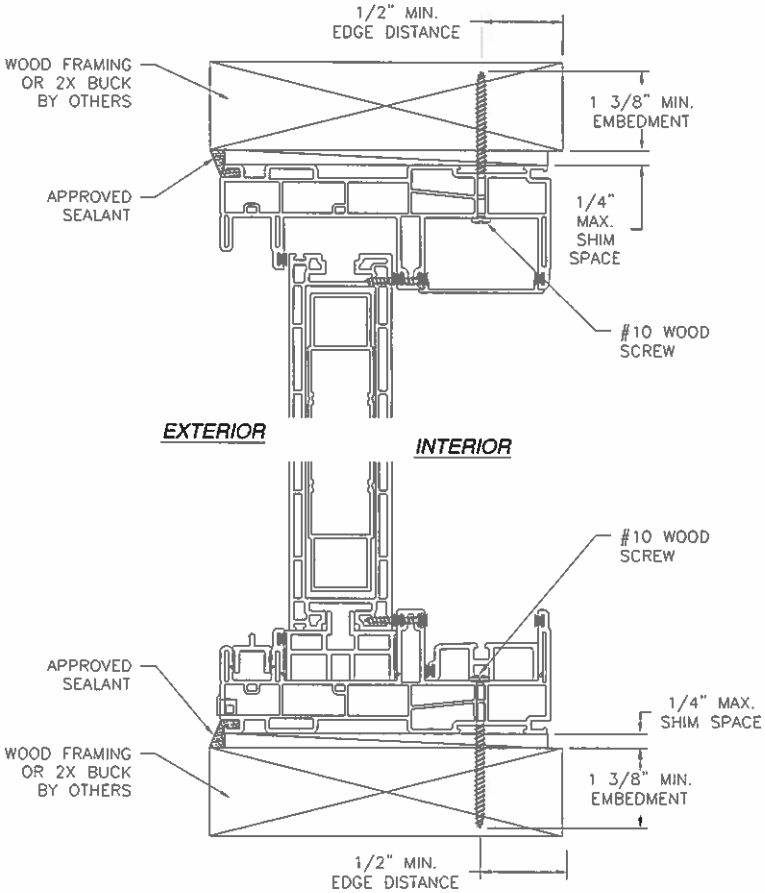

VERTICAL CROSS SECTION
WOOD FRAMING OR 2X BUCK INSTALLATION
HEAD AND SILL SHOWN, JAMBS SIMILAR

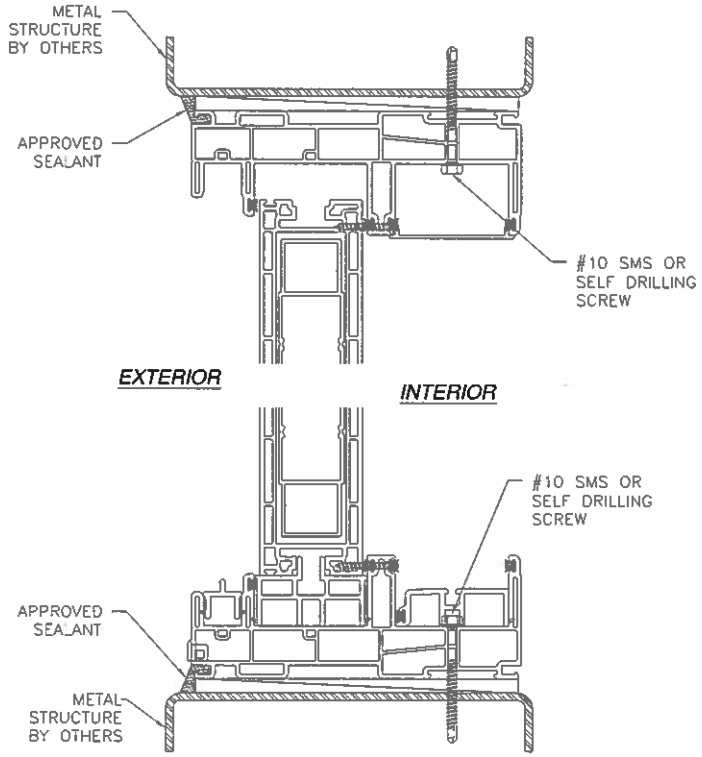

VERTICAL CROSS SECTION
METAL STRUCTURE INSTALLATION
HEAD AND SILL SHOWN, JAMBS SIMILAR

SIGNED: 07/23/2013

NOTE:
INTERIOR AND EXTERIOR FINISHES, BY OTHERS, NOT SHOWN FOR CLARITY.

KOLBE & KOLBE MILLWORK
1211 DEPOT STREET
MANAWA, WI 54949

WINDQUEST V707 SIDE LITE
51 X 96
INSTALLATION DETAILS

DRAWN: V.L.	DWG NO. 08-02164	REV –
SCALE NTS	DATE 07/23/13	SHEET 4 OF 8

STATE OF TEXAS
LUIS R. LOMAS
101889
LICENSED
PROFESSIONAL ENGINEER

Luis R. Lomas P.E.
TX No.: 101889

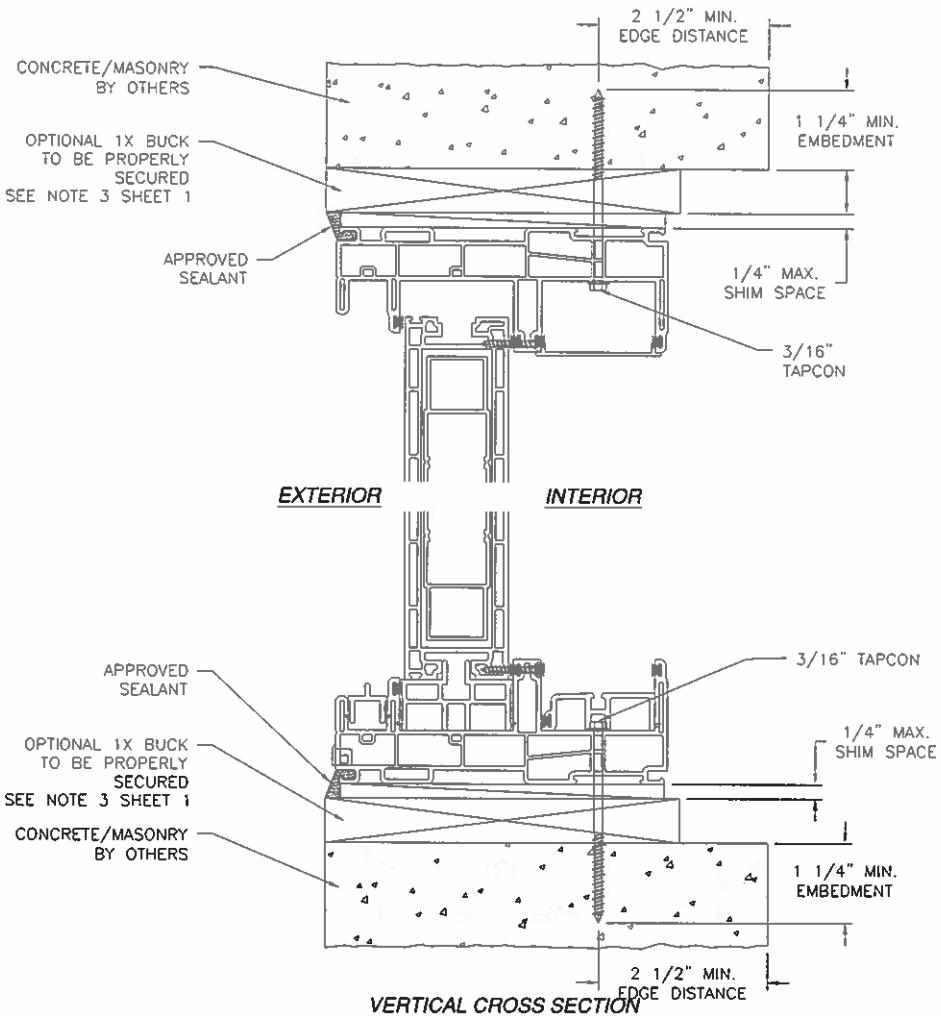

VERTICAL CROSS SECTION
CONCRETE/MASONRY INSTALLATION
HEAD AND SILL SHOWN, JAMBS SIMILAR

REVISIONS			
REV	DESCRIPTION	DATE	APPROVED

NOTE:
INTERIOR AND EXTERIOR FINISHES, BY OTHERS, NOT SHOWN FOR CLARITY.

SIGNED: 07/23/2013

KOLBE & KOLBE MILLWORK
1211 DEPOT STREET
MANAWA, WI 54949

WINDQUEST V707 SIDE LITE
51 X 96
INSTALLATION DETAILS

DRAWN:	DWG NO.	REV
V.L.	08-02164	–
SCALE NTS	DATE 07/23/13	SHEET 5 OF 8

STATE OF TEXAS
LUIS R. LOMAS
101889
LICENSED
PROFESSIONAL ENGINEER

Luis R. Lomas P.E.
TX No.: 101889

REVISIONS			
REV	DESCRIPTION	DATE	APPROVED

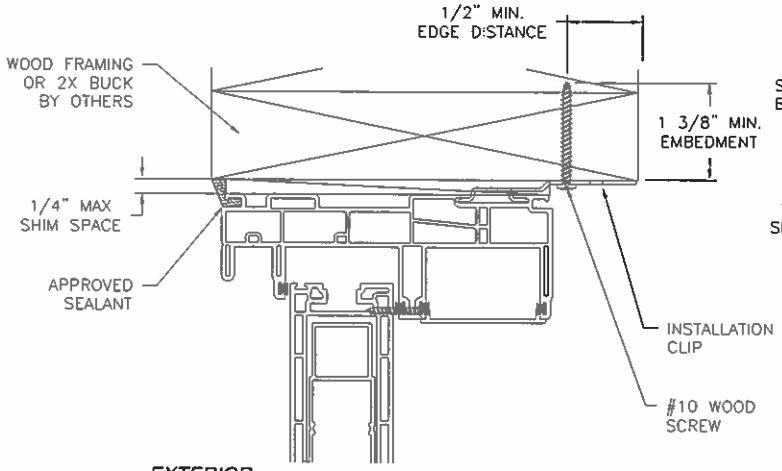

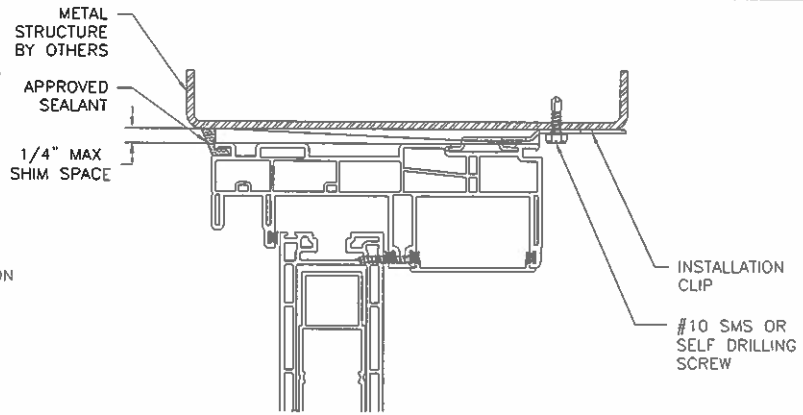

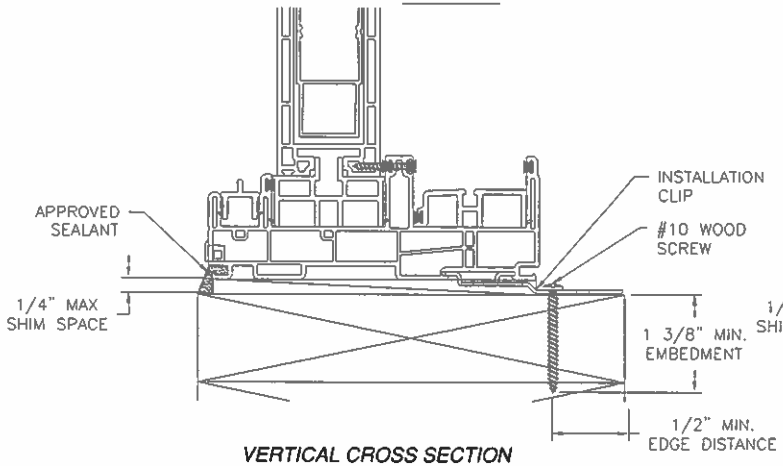

VERTICAL CROSS SECTION
WOOD FRAMING OR 2X BUCK INSTALLATION
HEAD AND SILL SHOWN, JAMBS SIMILAR

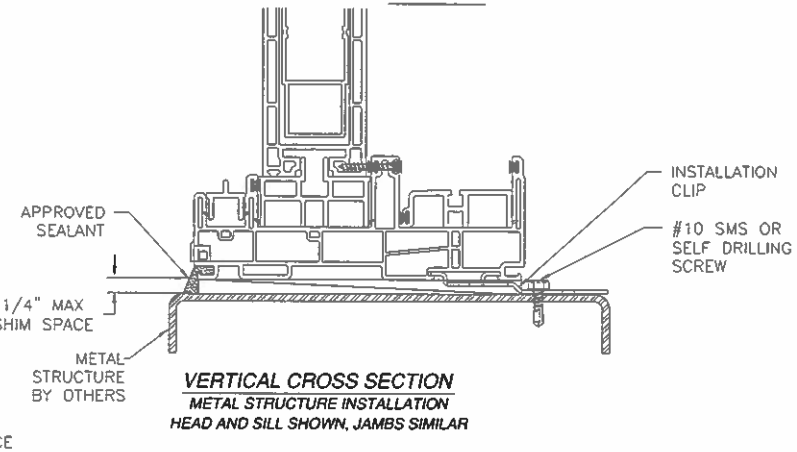

VERTICAL CROSS SECTION
METAL STRUCTURE INSTALLATION
HEAD AND SILL SHOWN, JAMBS SIMILAR

NOTE:
INTERIOR AND EXTERIOR FINISHES, BY OTHERS, NOT SHOWN FOR CLARITY.

SIGNED: 07/23/2013

KOLBE & KOLBE MILLWORK
1211 DEPOT STREET
MANAWA, WI 54949

WINDQUEST V707 SIDE LITE
51 X 96
INSTALLATION DETAILS

DRAWN: V.L.	DWG NO. 08-02164	REV –
SCALE NTS	DATE 07/23/13	SHEET 6 OF 8

STATE OF TEXAS
LUIS R. LOMAS
101889
LICENSED
PROFESSIONAL ENGINEER

Luis R. Lomas P.E.
TX No.: 101889

REVISIONS			
REV	DESCRIPTION	DATE	APPROVED

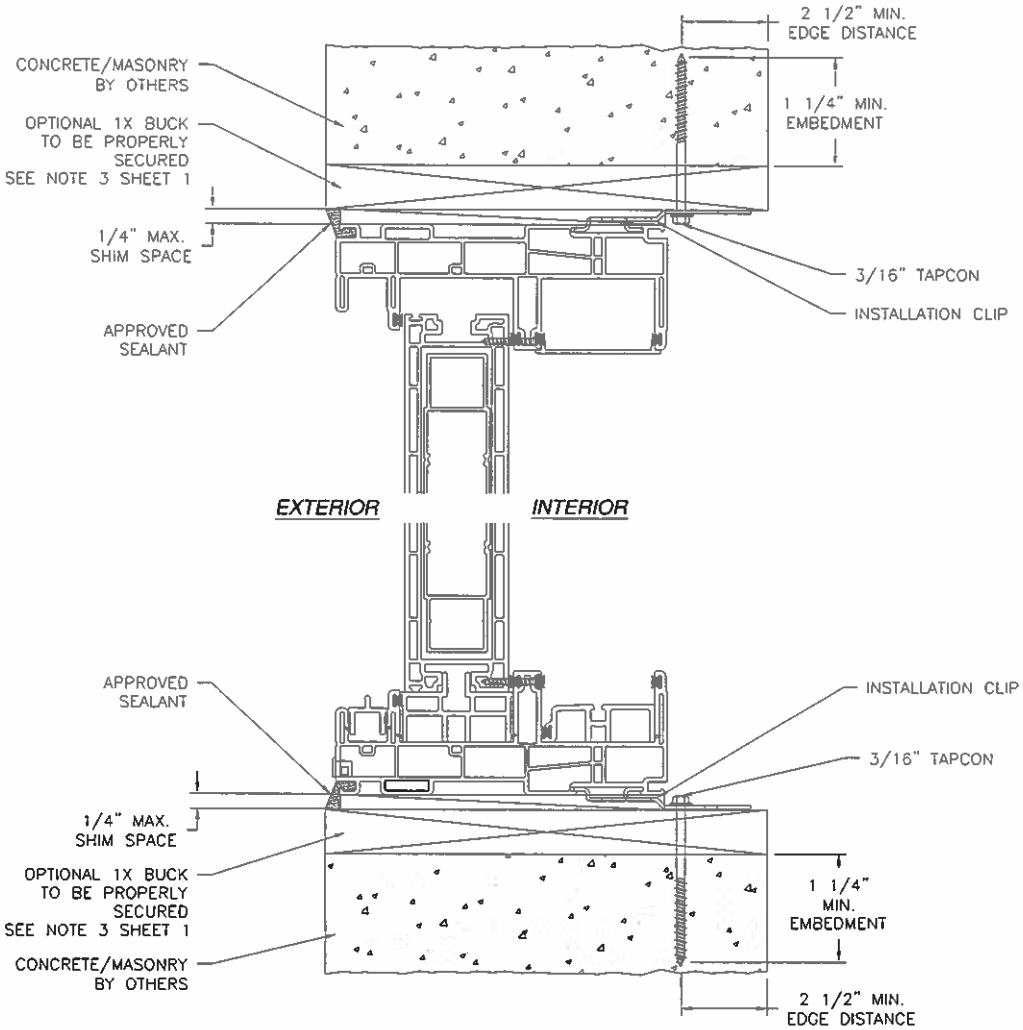

VERTICAL CROSS SECTION
CONCRETE/MASONRY INSTALLATION
HEAD AND SILL SHOWN, JAMBS SIMILAR

NOTE:
INTERIOR AND EXTERIOR FINISHES, BY OTHERS, NOT SHOWN FOR CLARITY.

SIGNED: 07/23/2013

KOLBE & KOLBE MILLWORK
1211 DEPOT STREET
MANAWA, WI 54949

WINDQUEST V707 SIDE LITE
51 X 96
INSTALLATION DETAILS

DRAWN:	DWG NO.	REV
V.L.	08-02164	–
SCALE NTS	DATE 07/23/13	SHEET 7 OF 8

STATE OF TEXAS
LUIS R. LOMAS
101889
LICENSED
PROFESSIONAL ENGINEER

Luis R. Lomas P.E.
TX No.: 101889

REVISIONS			
REV	DESCRIPTION	DATE	APPROVED

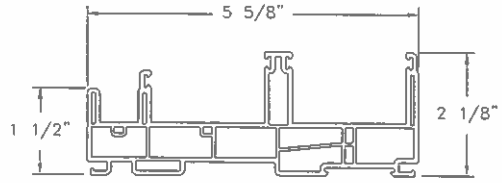

1 FRAME
VINYL PVC .075 THICK

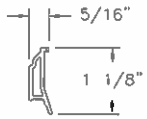

2 GLAZING BEAD
VINYL PVC .055 THICK

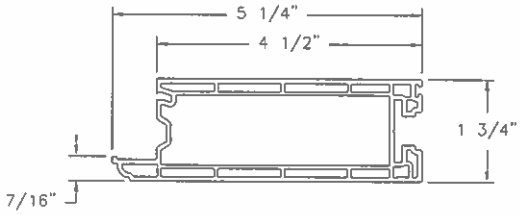

3 SASH
VINYL PVC .079 THICK

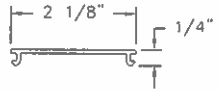

14 SASH STOP
VINYL PVC .063 THICK

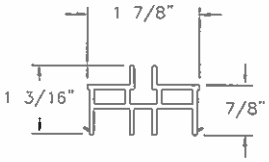

4 SUPPORT BLOCK
VINYL PVC .079 THICK

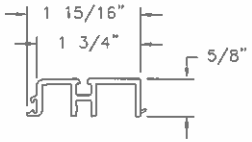

5 SILL ADAPTER
VINYL PVC .087 THICK

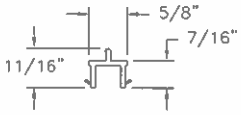

6 SCREEN ADAPTER
VINYL PVC .079 THICK

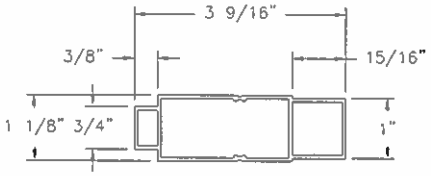

7 SASH REINFORCEMENT
AL 6063-T5 .059 THICK

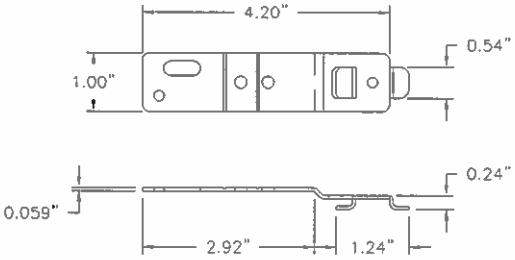

16 INSTALLATION STRIP
GALVANIZED STEEL G60

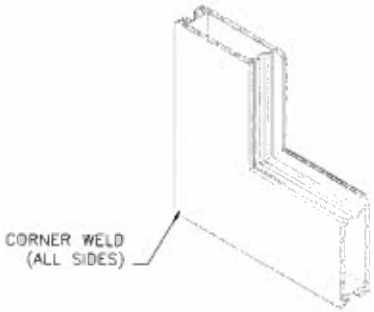

SASH CORNER CONSTRUCTION

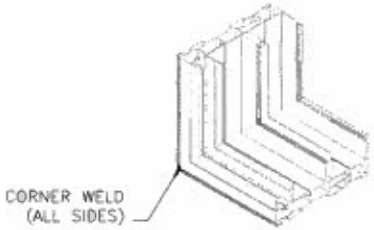

FRAME CORNER CONSTRUCTION

SIGNED: 07/23/2013

KOLBE & KOLBE MILLWORK
1211 DEPOT STREET
MANAWA, WI 54949

WINDQUEST V707 SIDE LITE
51 X 96
INSTALLATION DETAILS

DRAWN: V.L.	DWG NO. 08-02164	REV -
SCALE NTS	DATE 07/23/13	SHEET 8 OF 8

STATE OF TEXAS
LUIS R. LOMAS
101889
LICENSED
PROFESSIONAL ENGINEER

Luis R. Lomas P.E.
TX No.: 101889