REVISIONS			
REV	DESCRIPTION	DATE	APPROVED

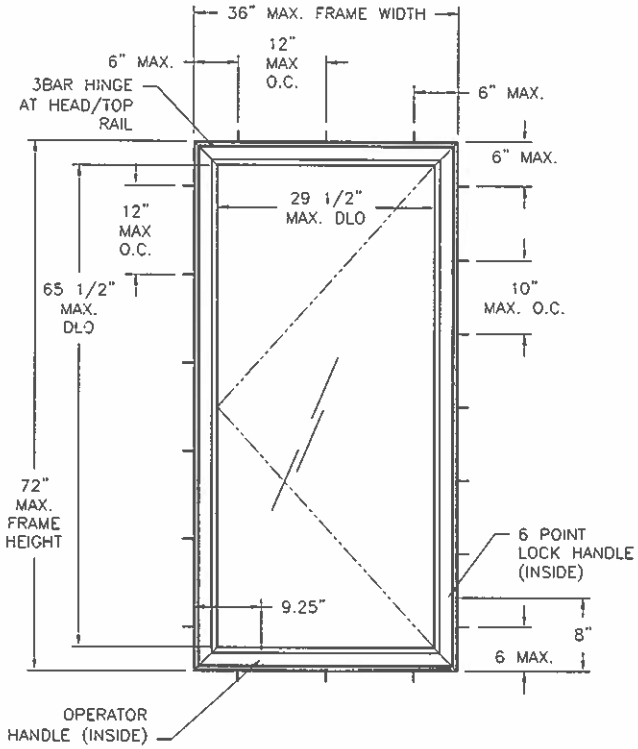

V707 WINDQUEST WHITE PVC CASEMENT WINDOW
STRAP INSTALLATION
EXTERIOR VIEW

DESIGN PRESSURE RATING	IMPACT RATING
±80PSF	NONE

NOTES:

1) THE PRODUCT SHOWN HEREIN IS DESIGNED AND MANUFACTURED TO COMPLY WITH REQUIREMENTS OF THE 2006 IBC AND 2006 IRC WITH STATE OF TEXAS MODIFICATIONS.
2) WOOD FRAMING AND MASONRY OPENING TO BE DESIGNED AND ANCHORED TO PROPERLY TRANSFER ALL LOADS TO STRUCTURE. FRAMING AND MASONRY OPENING IS THE RESPONSIBILITY OF THE ARCHITECT OR ENGINEER OF RECORD.
3) 1X BUCK OVER MASONRY/CONCRETE IS OPTIONAL. WHERE 1X BUCK IS NOT USED DISSIMILAR MATERIALS MUST BE SEPARATED WITH APPROVED COATING OR MEMBRANE. SELECTION OF COATING OR MEMBRANE IS THE RESPONSIBILITY OF THE ARCHITECT OR ENGINEER OF RECORD.
4) UNITS MUST BE GLAZED PER ASTM E1300-04 SEE SHEET 2 FOR GLAZING DETAIL.
5) APPROVED IMPACT PROTECTIVE SYSTEM IS REQUIRED FOR THIS PRODUCT IN WIND BORNE DEBRIS REGIONS.
6) FOR FLUSH AND STRAP ANCHORING INTO WOOD FRAMING OR 2X BUCK USE #8 WOOD SCREW WITH SUFFICIENT LENGTH TO ACHIEVE A 1 3/16" MINIMUM EMBEDMENT INTO SUBSTRATE. LOCATE ANCHORS AS SHOWN IN ELEVATIONS AND INSTALLATION DETAILS.
7) FOR FLUSH AND STRAP ANCHORING INTO MASONRY USE 3/16" TAPCONS WITH SUFFICIENT LENGTH TO ACHIEVE A 1 1/4" MINIMUM EMBEDMENT INTO SUBSTRATE WITH 2 5/8" MINIMUM EDGE DISTANCE. LOCATE ANCHORS AS SHOWN IN ELEVATIONS AND INSTALLATION DETAILS.
8) FOR FIN ANCHORING INTO WOOD FRAMING OR 2X BUCK USE #8 WOOD SCREW WITH SUFFICIENT LENGTH TO ACHIEVE A 1 1/2" MINIMUM EMBEDMENT INTO SUBSTRATE. LOCATE ANCHORS AS SHOWN IN ELEVATIONS AND INSTALLATION DETAILS.
9) ALL FASTENERS TO BE CORROSION RESISTANT.
10) INSTALLATION ANCHORS SHALL BE INSTALLED IN ACCORDANCE WITH ANCHOR MANUFACTURER'S INSTALLATION INSTRUCTIONS, AND ANCHORS SHALL NOT BE USED IN SUBSTRATES WITH STRENGTHS LESS THAN THE MINIMUM STRENGTH SPECIFIED BELOW.
11) INSTALLATION ANCHOR CAPACITIES FOR PRODUCTS HEREIN ARE BASED ON SUBSTRATE MATERIAL WITH THE FOLLOWING PROPERTIES:
    A. WOOD – MINIMUM SPECIFIC GRAVITY OF G=0.42
    B. CONCRETE – MINIMUM COMPRESSIVE STRENGTH OF 3,200 PSI.
    C. MASONRY – STRENGTH CONFORMANCE TO ASTM C-90, GRADE N, TYPE 1 (OR GREATER).

SIGNED: 07/24/2013

TABLE OF CONTENTS

SHEET NO.	DESCRIPTION
1	ELEVATION, ANCHORING LAYOUT AND NOTES
2	ELEVATIONS AND ANCHORING LAYOUTS
3	CROSS SECTIONS AND BILL OF MATERIALS
4 – 8	INSTALLATION DETAILS
9	COMPONENTS

KOLBE & KOLBE MILLWORK
1211 DEPOT ST
MANAWA, WI 54949

V707 WINDQUEST OUTSWING CASEMENT WINDOW
36" X 72" NON-IMPACT
ELEVATION, ANCHORING LAYOUT & NOTES

DRAWN:	DWG NO.	REV
V.L.	08-02170	–
SCALE NTS	DATE 07/23/13	SHEET 1 OF 9

STATE OF TEXAS
Luis R. Lomas
101889
LICENSED
PROFESSIONAL ENGINEER

Luis R. Lomas P.E.
TX No.: 101889

REVISIONS			
REV	DESCRIPTION	DATE	APPROVED

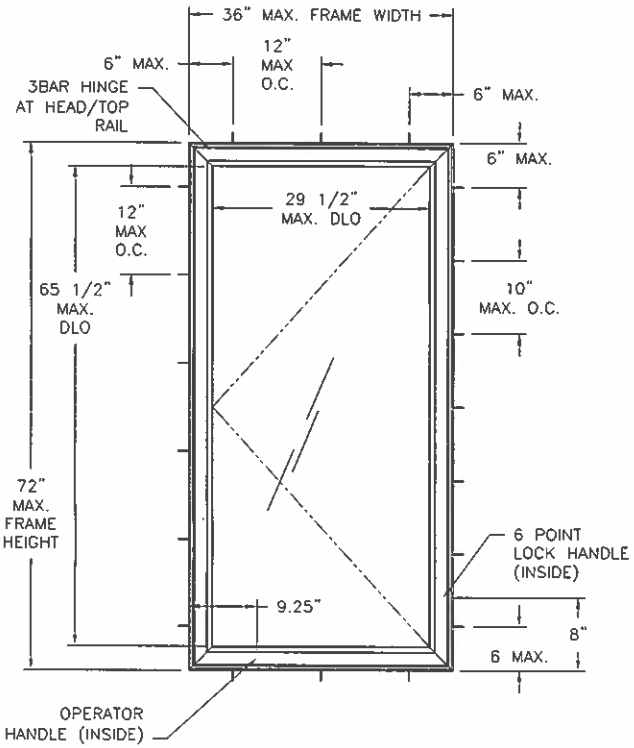

V707 WINDQUEST WHITE PVC CASEMENT WINDOW
FLUSH INSTALLATION
EXTERIOR VIEW

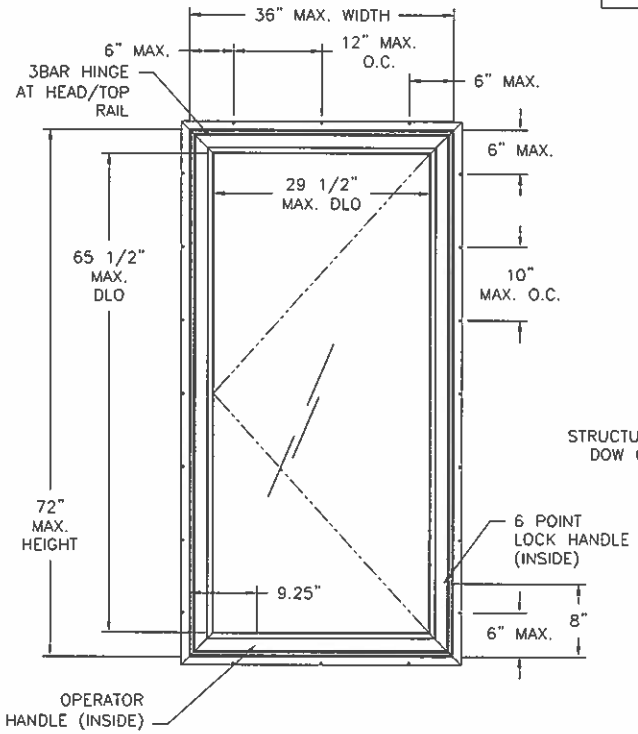

V707 WINDQUEST WHITE PVC CASEMENT WINDOW
FIN INSTALLATION
EXTERIOR VIEW

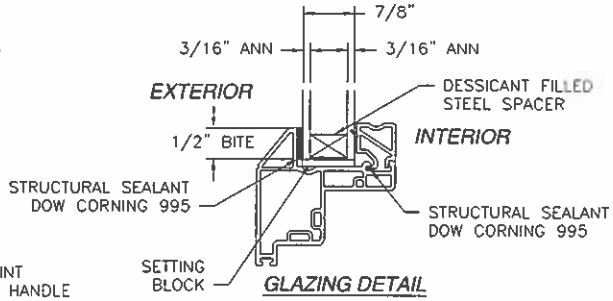

GLAZING DETAIL

DESIGN PRESSURE RATING	IMPACT RATING
±80PSF	NONE

SIGNED: 07/24/2013

KOLBE & KOLBE MILLWORK
1211 DEPOT ST
MANAWA, WI 54949

V707 WINDQUEST OUTSWING CASEMENT WINDOW
36" X 72" NON-IMPACT
ELEVATIONS & ANCHORING LAYOUT

DRAWN: V.L.	DWG NO. 08-02170	REV –
SCALE NTS	DATE 07/23/13	SHEET 2 OF 9

STATE OF TEXAS
LUIS R. LOMAS
101889
LICENSED
PROFESSIONAL ENGINEER

Luis R. Lomas P.E.
TX No.: 101889

PARTS LIST				
NO.	PART NUMBER	DESCRIPTION	MANUFACTURER	MATERIAL
1	4506	FRAME	THERMOPLAST INC	WHITE PVC
2	4413	7/8" GLAZING BEAD	THERMOPLAST INC	WHITE PVC
3	8619	SASH	THERMOPLAST INC	WHITE PVC
4	PB8830187	WEATHER STRIP	SCHLEGEL	
5		SETTING BLOCK (23X50.8X32mm)		80 DUROMETER
6	HG040703	HINGES	ROTO	
7	OP05-7502	DUAL ARM OPERATOR	ROTO	
8	OP05-1003-51	BOTTOM SPACER 3.2MM	ROTO	
9	G2HNDLPLT-02	FASTENER PLATE	ROTO	
10	LB05-1004-51	TIE BAR GUIDE	ROTO	
11	OP05-8002	STUD BRACKET	ROTO	
12	OP05-8100	OPERATOR TRACK	ROTO	
13	LB06-770	TIE BAR	ROTO	
14	LM08-7520-00	LOCK	ROTO	
15	LB05-1003-51	KEEPER	ROTO	
16	6067	SNUBBER		
17		7/16" SCREN FRAME		
18		OPERATOR SCREWS FH #8 X 1"		
19		HINGE SCREWS FH #7 X 5/8"		
20		SNUBBER SCREWS FH #8 X 1"		
21		OPERATOR SCREWS FH #7 X 5/8"		
22		KEEPER SCREWS FH #8 X 5/8"		
23		LOCK SCREWS PH #8 X 1"		
24		STUD BRACKET SCREWS FH#7X5/8"		
25	4560	INTALLATION STRIP		STEEL G60
26	995	STRUCTURAL SEALANT	DOW CORNING	
27	OP05-7810	HANDLE	ROTO	
28		TIE BAR GUIDE SCREW FH #8 X 1"		
29		SNUBBER SCREWS # 8 X 1"		
30		7/8" IGU 1/8" ANN LAMINATED		
31		FIN	THERMOPLAST INC	WHITE PVC
32	14.97	HINGES	TRUTH	
33	50.00	DUAL ARM OPERATOR	TRUTH	
34	21600E	FASTENER PLATE	TRUTH	
35	10276	TIE BAR GUIDE	TRUTH	
36	41014	OPERATOR TRACK	TRUTH	
37		TIE BAR	TRUTH	
38	24-33	LOCK	TRUTH	
39	41129	KEEPER	TRUTH	
40	11454	HANDLE	TRUTH	
41	12511	STUD BRACKET	TRUTH	

REVISIONS			
REV	DESCRIPTION	DATE	APPROVED

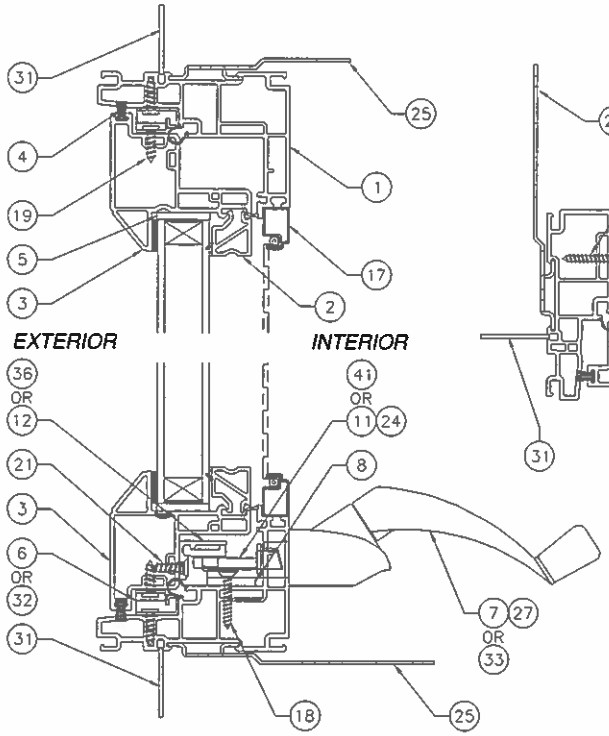

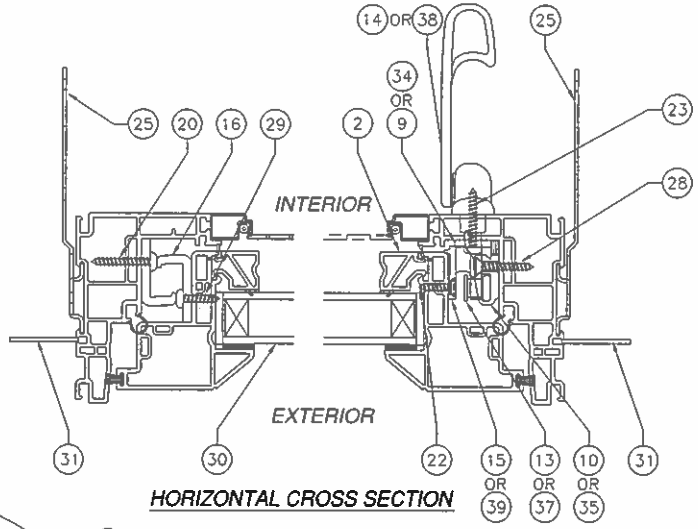

SIGNED: 07/24/2013

KOLBE & KOLBE MILLWORK
1211 DEPOT ST
MANAWA, WI 54949

V707 WINDQUEST OUTSWING CASEMENT WINDOW
36" X 72" NON-IMPACT
CROSS SECTIONS & BILL OF MATERIALS

DRAWN: V.L.	DWG NO. 08-02170	REV -
SCALE NTS	DATE 07/23/13	SHEET 3 OF 9

STATE OF TEXAS
LUIS R. LOMAS
101889
LICENSED
PROFESSIONAL ENGINEER

Luis R. Lomas P.E.
TX No.: 101889

REVISIONS			
REV	DESCRIPTION	DATE	APPROVED

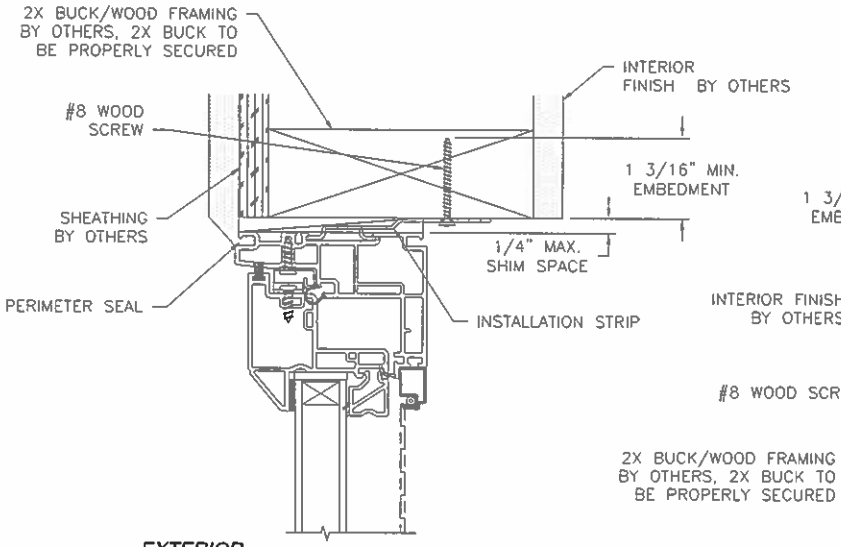

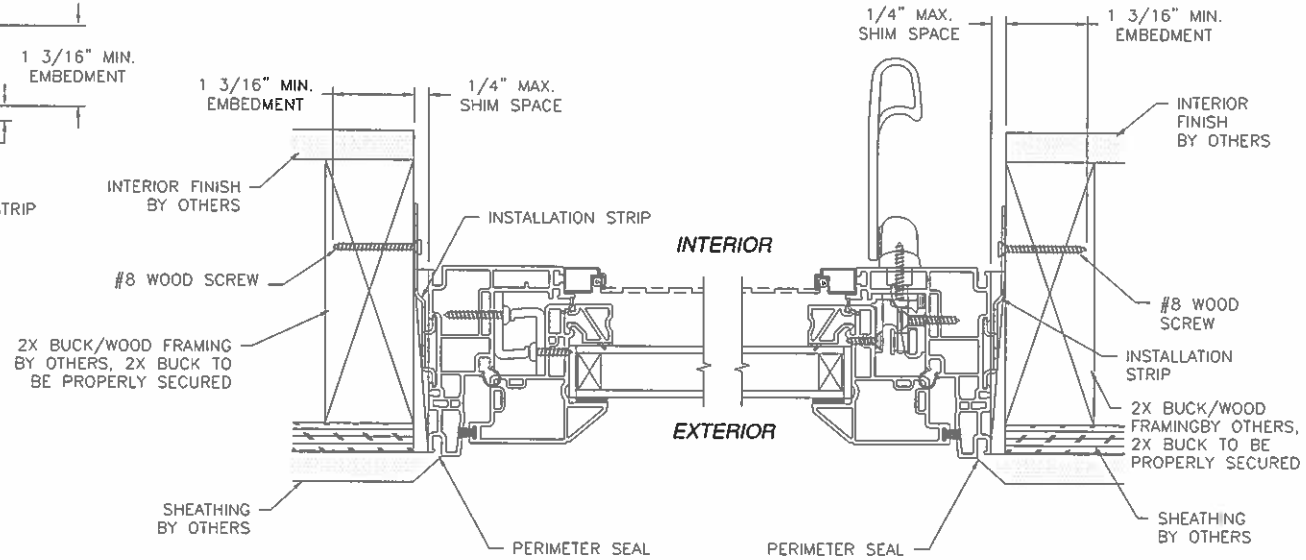

HORIZONTAL CROSS SECTION
STRAP INSTALLATION 2X BUCK/WOOD FRAMING

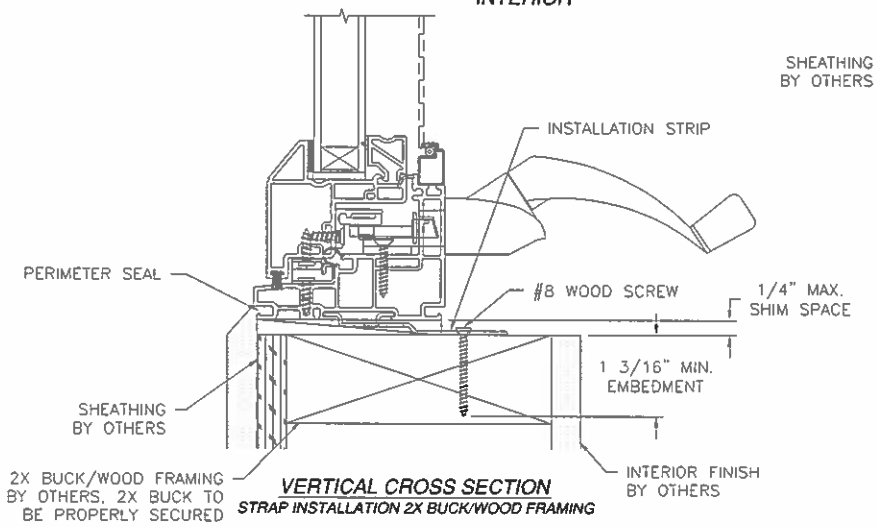

VERTICAL CROSS SECTION
STRAP INSTALLATION 2X BUCK/WOOD FRAMING

SIGNED: 07/24/2013

KOLBE & KOLBE MILLWORK
1211 DEPOT ST
MANAWA, WI 54949

V707 WINDQUEST OUTSWING CASEMENT WINDOW
36" X 72" NON-IMPACT
STRAP INSTALLATION DETAILS

DRAWN: V.L.	DWG NO. 08-02170	REV –
SCALE NTS	DATE 07/23/13	SHEET 4 OF 9

STATE OF TEXAS
LUIS R. LOMAS
101889
LICENSED
PROFESSIONAL ENGINEER

Luis R. Lomas P.E.
TX No.: 101889

REVISIONS			
REV	DESCRIPTION	DATE	APPROVED

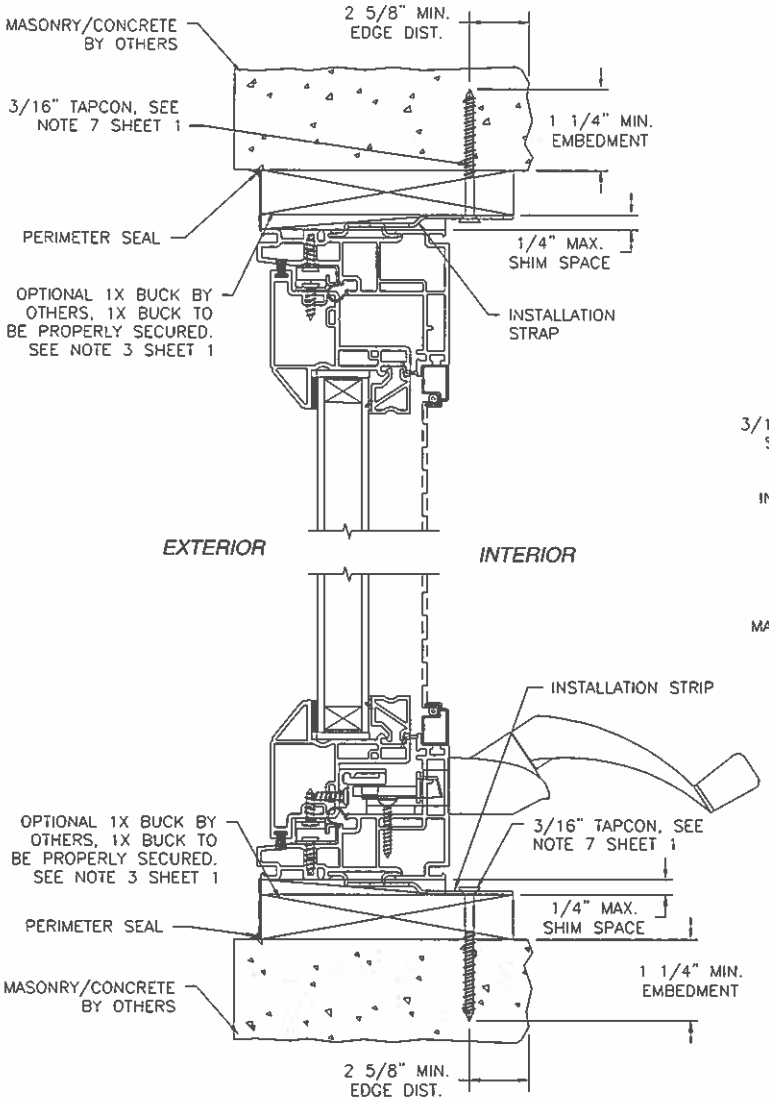

VERTICAL CROSS SECTION
STRAP INSTALLATION MASONRY/CONCRETE

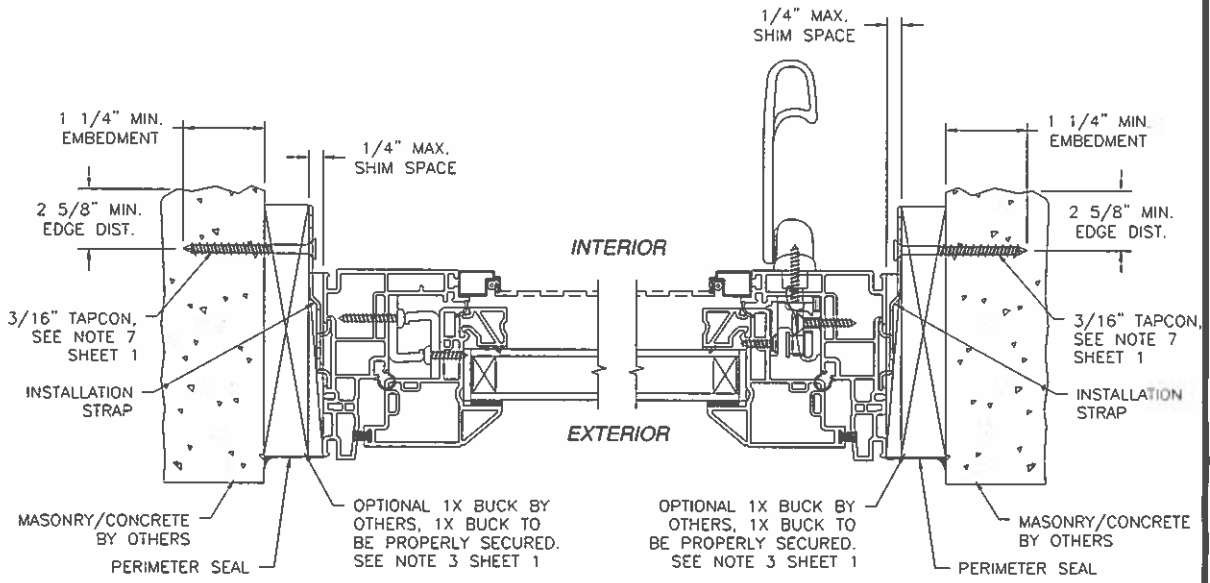

HORIZONTAL CROSS SECTION
STRAP INSTALLATION MASONRY/CONCRETE

SIGNED: 07/24/2013

KOLBE & KOLBE MILLWORK
1211 DEPOT ST
MANAWA, WI 54949

V707 WINDQUEST OUTSWING CASEMENT WINDOW
36" X 72" NON-IMPACT
STRAP INSTALLATION DETAILS

DRAWN: V.L.	DWG NO. 08-02170	REV -
SCALE NTS	DATE 07/23/13	SHEET 5 OF 9

STATE OF TEXAS
LUIS R. LOMAS
101889
LICENSED
PROFESSIONAL ENGINEER

Luis R. Lomas P.E.
TX No.: 101889

REVISIONS			
REV	DESCRIPTION	DATE	APPROVED

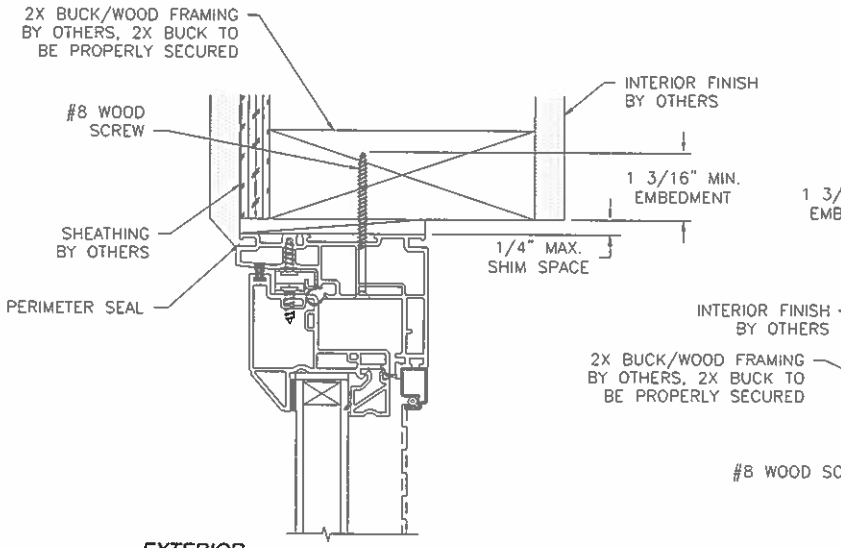

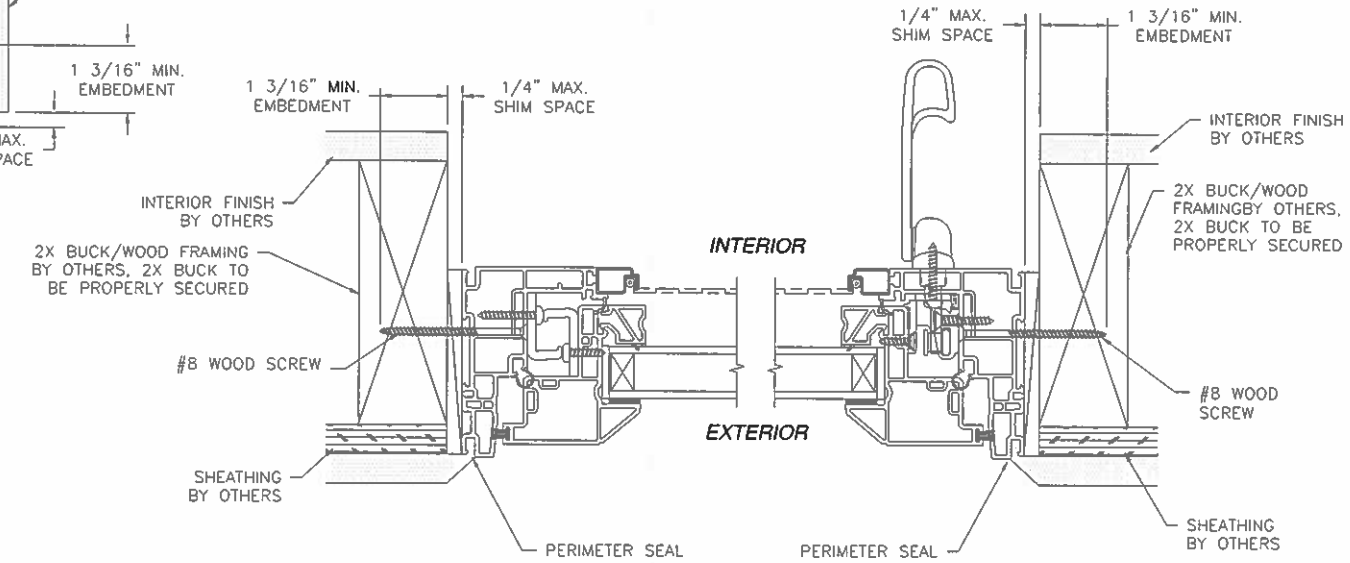

HORIZONTAL CROSS SECTION
FLUSH INSTALLATION 2X BUCK/WOOD FRAMING

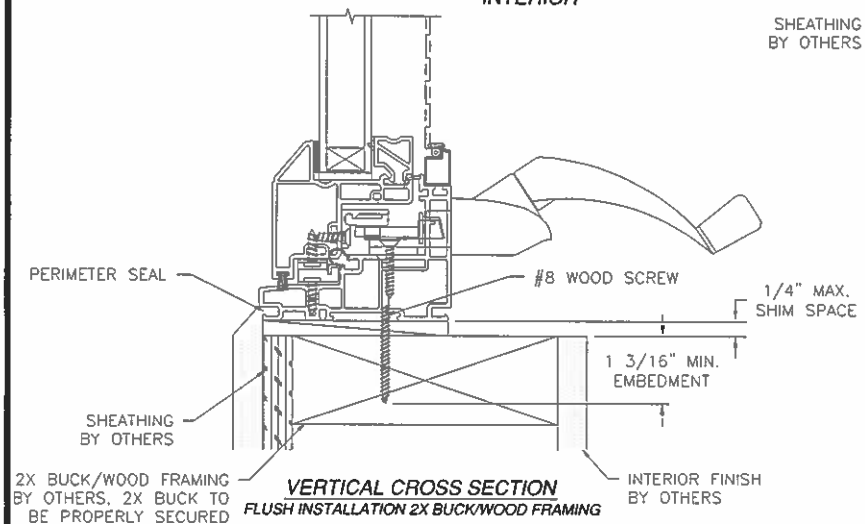

VERTICAL CROSS SECTION
FLUSH INSTALLATION 2X BUCK/WOOD FRAMING

SIGNED: 07/24/2013

KOLBE & KOLBE MILLWORK
1211 DEPOT ST
MANAWA, WI 54949

V707 WINDQUEST OUTSWING CASEMENT WINDOW
36" X 72" NON-IMPACT
FLUSH INSTALLATION DETAILS

DRAWN: V.L.	DWG NO. 08-02170	REV –
SCALE NTS	DATE 07/23/13	SHEET 6 OF 9

STATE OF TEXAS
LUIS R. LOMAS
101889
LICENSED
PROFESSIONAL ENGINEER

Luis R. Lomas P.E.
TX No.: 101889

REVISIONS			
REV	DESCRIPTION	DATE	APPROVED

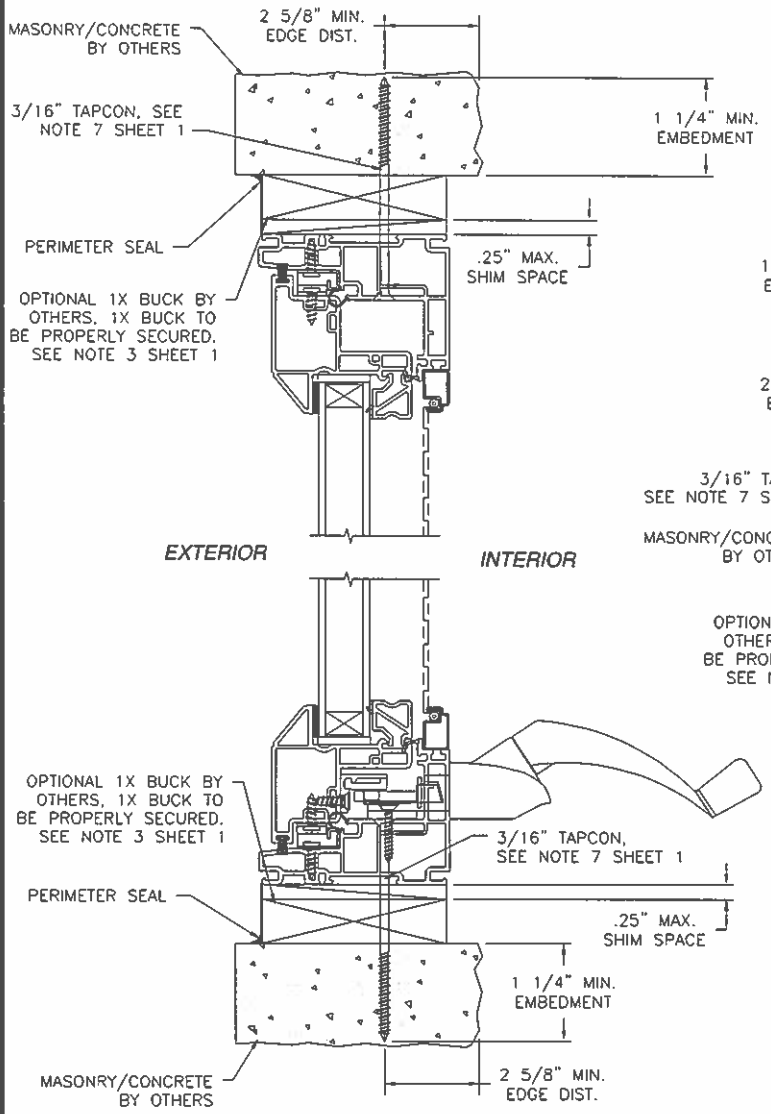

VERTICAL CROSS SECTION
FLUSH INSTALLATION MASONRY/CONCRETE

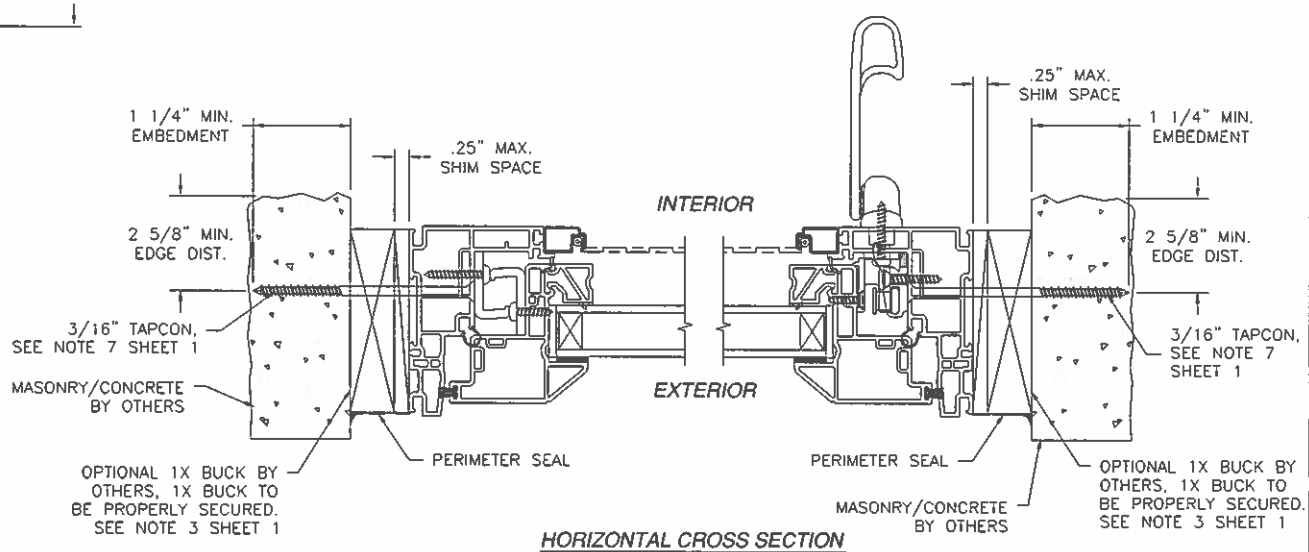

HORIZONTAL CROSS SECTION
FLUSH INSTALLATION MASONRY/CONCRETE

SIGNED: 07/24/2013

KOLBE & KOLBE MILLWORK
1211 DEPOT ST
MANAWA, WI 54949

V707 WINDQUEST OUTSWING CASEMENT WINDOW
36" X 72" NON-IMPACT
FLUSH INSTALLATION DETAILS

DRAWN: V.L.	DWG NO. 08-02170	REV –
SCALE NTS	DATE 07/23/13	SHEET 7 OF 9

STATE OF TEXAS
LUIS R. LOMAS
101889
LICENSED
PROFESSIONAL ENGINEER

Luis R. Lomas P.E.
TX No.: 101889

REVISIONS			
REV	DESCRIPTION	DATE	APPROVED

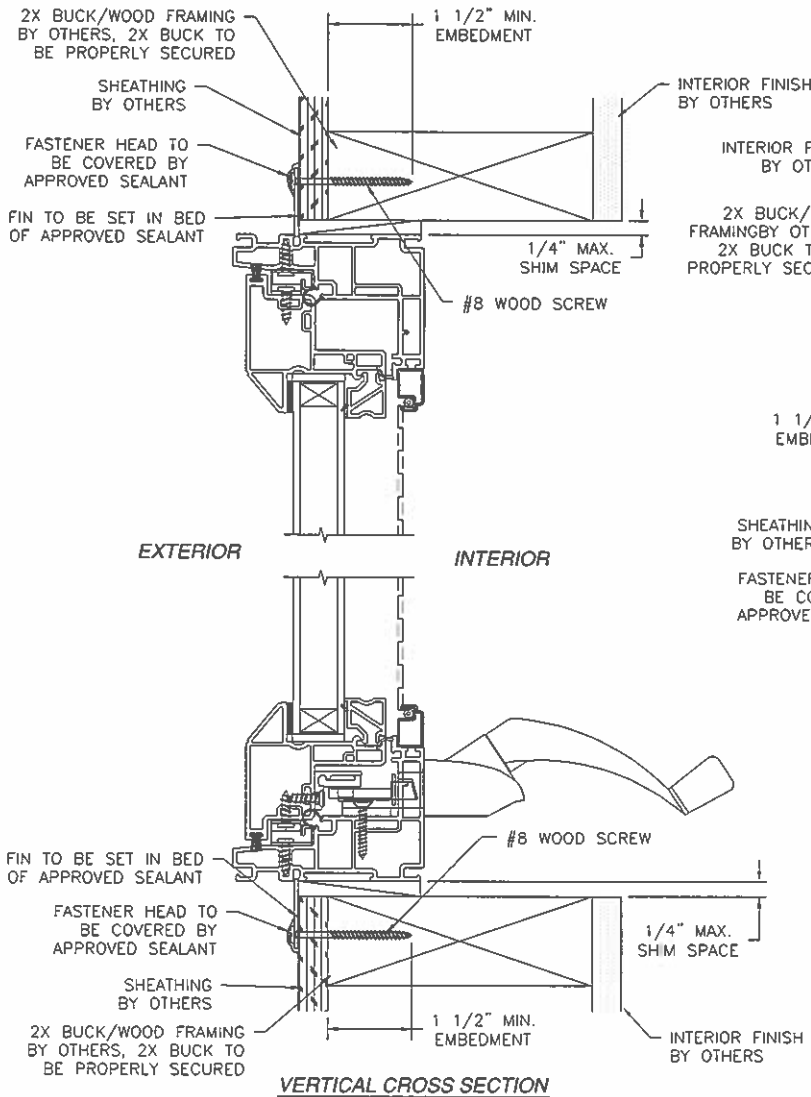

VERTICAL CROSS SECTION
FIN INSTALLATION 2X BUCK/WOOD FRAMING

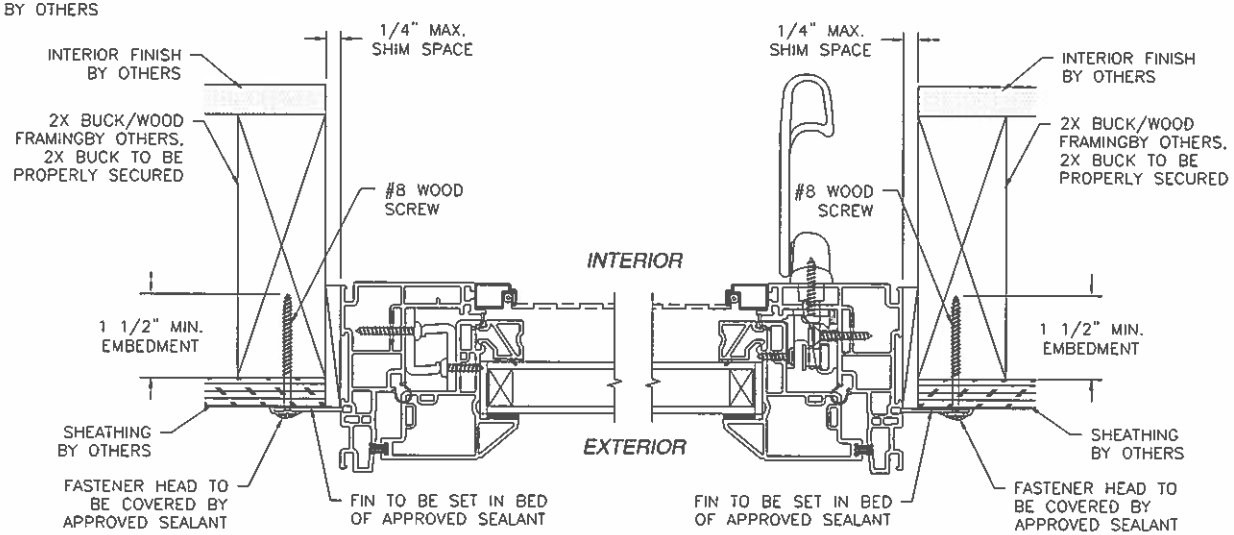

HORIZONTAL CROSS SECTION
FIN INSTALLATION 2X BUCK/WOOD FRAMING

SIGNED: 07/24/2013

KOLBE & KOLBE MILLWORK
1211 DEPOT ST
MANAWA, WI 54949

V707 WINDQUEST OUTSWING CASEMENT WINDOW
36" X 72" NON-IMPACT
FIN INSTALLATION DETAILS

DRAWN: V.L.	DWG NO. 08-02170	REV –
SCALE NTS	DATE 07/23/13	SHEET 8 OF 9

STATE OF TEXAS
LUIS R. LOMAS
101889
LICENSED
PROFESSIONAL ENGINEER

Luis R. Lomas P.E.
TX No.: 101889

REVISIONS			
REV	DESCRIPTION	DATE	APPROVED

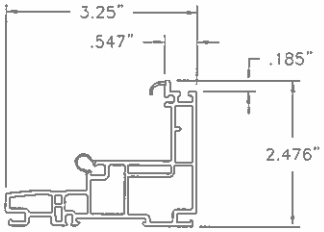

1 **FRAME**
VINYL PVC .071 THICK

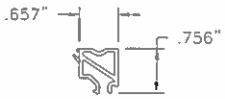

2 **GLAZING BEAD**
VINYL PVC .059 THICK

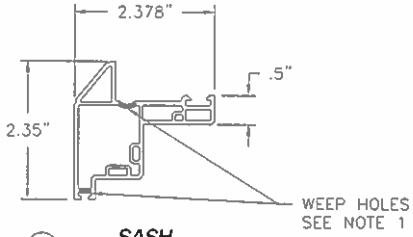

3 **SASH**
VINYL PVC .071 THICK

NOTE:

1.- 5/8" X 1/8" WEEP HOLE LOCATED 1" FROM EACH END OF BOTTOM RAIL.

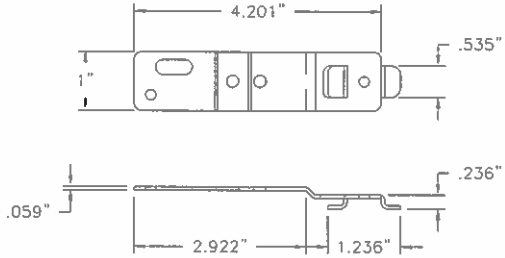

25 **INSTALLATION STRIP**
GALVANIZED STEEL G60

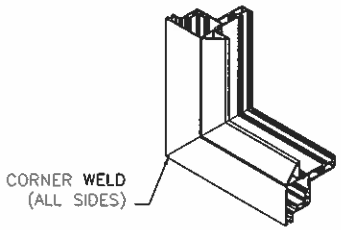

SASH CORNER CONSTRUCTION

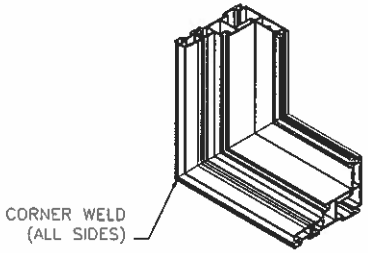

FRAME CORNER CONSTRUCTION

SIGNED: 07/24/2013

KOLBE & KOLBE MILLWORK
1211 DEPOT ST
MANAWA, WI 54949

V707 WINDQUEST OUTSWING CASEMENT WINDOW
36" X 72" NON-IMPACT
COMPONENTS

DRAWN:	DWG NO.	REV
V.L.	08-02170	-
SCALE NTS	DATE 07/23/13	SHEET 9 OF 9

STATE OF TEXAS
LUIS R. LOMAS
101889
LICENSED
PROFESSIONAL ENGINEER

Luis R. Lomas P.E.
TX No.: 101889