THESE DRAWINGS ARE APPLICABLE ONLY TO THE PRODUCT SPECIFIED. THEY MAY NOT BE USED FOR THE ASSEMBLY AND/OR INSTALLATION OF ANY OTHER PRODUCT NOR MAY THEY BE USED FOR RATIONAL AND/OR LOCAL APPROVAL OF ANY PRODUCT NOT PRODUCED BY THE MANUFACTURER STATED ON THESE DRAWINGS.

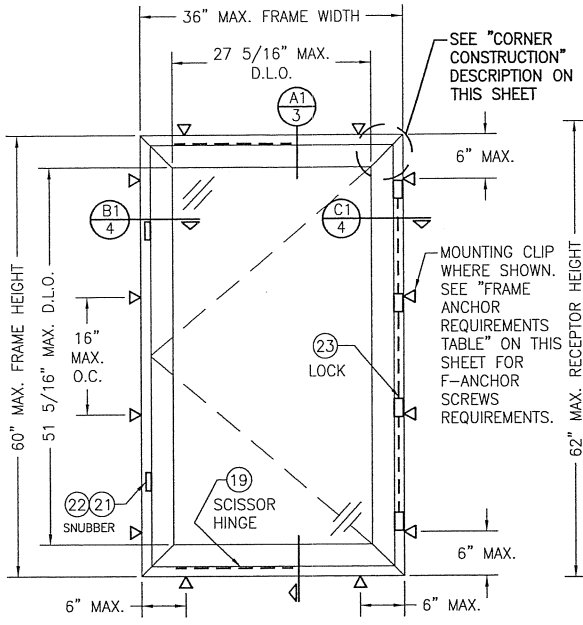

EXTERIOR ELEVATION
SINGLE WINDOW ANCHORED WITH MOUNTING CLIPS
(NO RECEPTOR)
(MULTIPOINT LOCK, SNUBBER & SCISSOR HINGE CONDITION SHOWN. CAMLOCK & BUTT HINGE CONDITON ALSO APPLIES)
SCALE: 3/4"=1'-0"

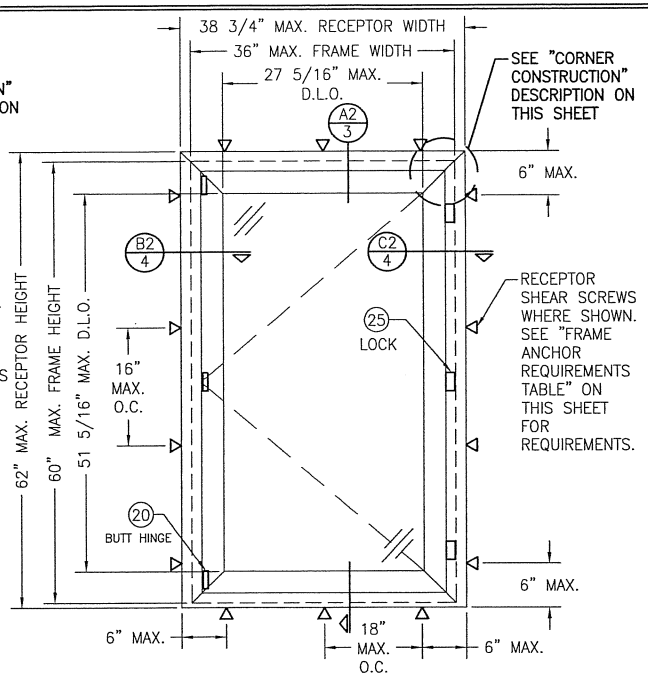

EXTERIOR ELEVATION
SINGLE WINDOW ANCHORED WITH RECEPTOR
(CAMLOCK & BUTT HINGE CONDITION SHOWN. MULTIPOINT LOCK, SNUBBER & SCISSOR HINGE CONDITION ALSO APPLIES)
SCALE: 3/4"=1'-0"

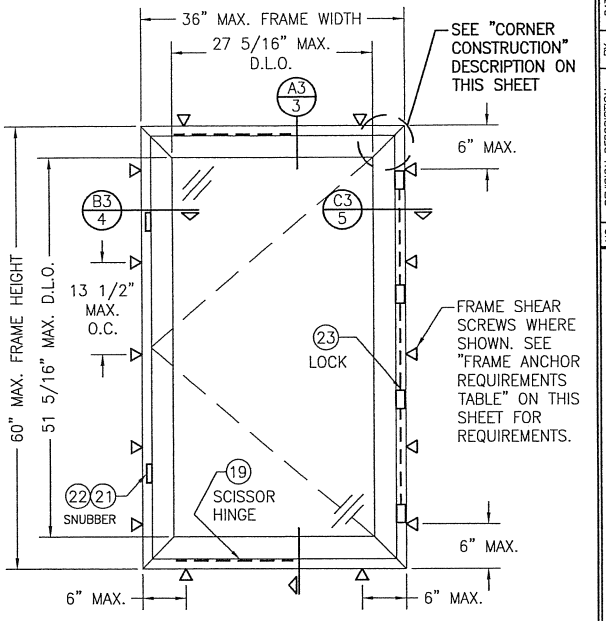

EXTERIOR ELEVATION
SINGLE WINDOW DIRECT MOUNTED
WITH FRAME SHEAR SCREWS
(NO RECEPTOR)
(MULTIPOINT LOCK, SNUBBER & SCISSOR HINGE CONDITION SHOWN. CAMLOCK & BUTT HINGE CONDITON ALSO APPLIES)
SCALE: 3/4"=1'-0"

CAMLOCK REQUIREMENTS	
MAX. WINDOW FRAME HEIGHT	NO. OF LOCK POINTS REQ'D
60"	3
40"	2

MUTIPIONT LOCK REQUIREMENTS	
MAX. WINDOW FRAME HEIGHT	NO. OF LOCK POINTS REQ'D
60"	4
45"	3
30"	2

SNUBBER REQUIREMENTS
2 PER WINDOW; ALL WINDOW SIZES

ALLOWABLE DESIGN PRESSURE
+/-90 PSF

GENERAL NOTES:

1. THESE WINDOW SYSTEMS HAVE BEEN TESTED, ANALYZED & APPROVED FOR DESIGN PRESSURES NOT TO EXCEED THOSE SHOWN IN THE "ALLOWABLE DESIGN PRESSURE TABLE(S).
2. OPENINGS, BUCKING & BUCKING FASTENERS MUST BE PROPERLY DESIGNED & INSTALLED TO TRANSFER WIND LOADS TO THE STRUCTURE.
3. ALL HARDWARE & FASTENERS SHALL BE IN ACCORDANCE WITH THESE DRAWINGS & SHALL NOT VARY UNLESS SPECIFICALLY MENTIONED ON THE DRAWINGS. SPECIFIED ANCHOR EMBED TO BASE MATERIAL SHALL BE BEYOND WALL FINISH OR STUCCO.
4. THE DETAILS & SPECIFICATIONS SHOWN HEREIN REPRESENT THE PRODUCTS TESTED & PROPOSED FOR WATER, AIR, IMPACT, CYCLIC & UNIFORM STATIC AIR PRESSURE TESTING IN CONFORMANCE WITH ASTM E330, E283, E331, F588, E1886 & E1996 FOR LARGE MISSILE IMPACT WINDOWS.
5. THESE WINDOW SYSTEMS HAVE BEEN DESIGNED IN ACCORDANCE WITH AND MEET THE REQUIREMENTS OF THE INTERNATIONAL BUILDING CODE (IBC).
6. IMPACT SHUTTERS ARE NOT REQUIRED WITH THESE WINDOWS.
7. ALL ANCHORS SECURING WINDOW FRAME TO PRESSURE TREATED BUCKS OR WOOD FRAMING SHALL BE CAPABLE OF RESISTING CORROSION CAUSED BY THE PRESSURE TREATING CHEMICALS IN THE WOOD.
8. DETERMINE THE POSITIVE & NEGATIVE DESIGN LOADS TO USE WHEN REFERENCING THESE DOCUMENTS IN ACCORDANCE WITH THE GOVERNING CODE AND GOVERNING WIND VELOCITY. FOR WIND LOAD CALCULATIONS IN ACCORDANCE WITH THE INTERNATIONAL BUILDING CODE, A DIRECTIONALITY FACTOR OF KD = 0.85 MAY BE APPLIED PER THE ASCE-7 STANDARD.
9. NO INCREASE IN ALLOWABLE STRESS HAS BEEN USED IN THE CERTIFICATION OF THIS PRODUCT. WIND LOAD DURATION FACTOR CD = 1.6 WAS USED FOR WOOD SCREW ANALYSIS ONLY.
10. MATERIALS, INCLUDING BUT NOT LIMITED TO STEEL SCREWS, THAT COME INTO CONTACT WITH OTHER DISSIMILAR MATERIALS SHALL BE SEPARATED OR COATED AS REQUIRED TO AVOID CORROSION OF EITHER MATERIAL.

FRAME ANCHOR REQUIREMENTS TABLE
(MOUNTING CLIP, RECEPTOR & MULLION CLIP SCREWS)

OPENING TYPE (SUBSTRATE)	FRAME/CLIP TO OPENING FASTENER TYPE	MINIMUM EMBED	MINIMUM EDGE DIST.
2X_ WOOD FRAME OR BUCK (MIN. GR. 3 & G=0.55)	NO. 14 SMS OR WOOD SCREW	1 1/4"	3/4"
MIN. 18 GA. 33 KSI METAL STUD	(2) NO. 14 SELF TAP/DRILLING SCREW	FULL	1/2"
MIN. 1/8" THK A36 STEEL	(2) NO. 14 SELF TAP/DRILLING SCREW	FULL	1/2"
MIN. 1/8" THK 6063-T5 ALUM.	(2) NO. 14 SELF TAP/DRILLING SCREW	FULL	1/2"
(3) C-90 CMU	(1) 1/4" CONCRETE SCREW	1 1/4"	( )
2500 PSI CONCRETE	(1) 1/4" CONCRETE SCREW	1 1/2"	( )

2" WITH MOUNTING CLIP
2 1/2" WITH RECEPTOR

(1) CONCRETE SCREWS SHALL BE ELCO ULTRACONS, ELCO CRETE-FLEX, ITW RAMSET/RED HEAD TAPCONS OR HILTI KWIK-CON II (HARDENED STEEL OR S.S.).
(2) SELF TAP/DRILLING SCREWS SHALL BE GRADE 5 CORROSION RESISTANT STEEL.
(3) CMU IS APPLICABLE AT SIDES ONLY.

CORNER CONSTRUCTION:

JAMB CORNERS:
MITERED, JOINED TOGETHER WITH A CORNER KEY, AND SECURED WITH (2) NO. 10 X 3/4" SMS SCREWS PER CORNER KEY AND SEALED WITH DOW 1199 SEALANT.

SASH CORNERS:
MITERED, JOINED TOGETHER WITH A CORNER KEY, AND SECURED WITH (2) NO. 10 X 3/4" SMS SCREWS PER CORNER KEY AND SEALED WITH DOW 1199 SEALANT.

STATE OF TEXAS
WARREN W. SCHAEFER
113497
PROFESSIONAL ENGINEER

MAR 04 2013
WARREN W. SCHAEFER, P.E.
P.E. NO. 113497

DRAWN BY: W.R.M.	CHECKED BY: W.W.S.
PLOT: 1=16	DATE: 01/28/13

NO.	REVISION DESCRIPTION	BY	DATE

DRAWING TITLE: AA900 ISOWEB OUT-SWING L.M.I. CASEMENT WINDOW

JOB INFORMATION: KAWNEER COMPANY, INC. 555 GUTHRIDGE COURT NORCROSS, GA 30092 770-449-5555

CONSULTANTS: W. W. SCHAEFER ENGINEERING & CONSULTING, P.A. (REG. NO. F-14980) 7490 150TH COURT NORTH, PALM BEACH GARDENS, FL 33418 PHONE: 561-744-3424

DRAWING NO. 1545T
REV.
SHEET NO. 1 OF 6

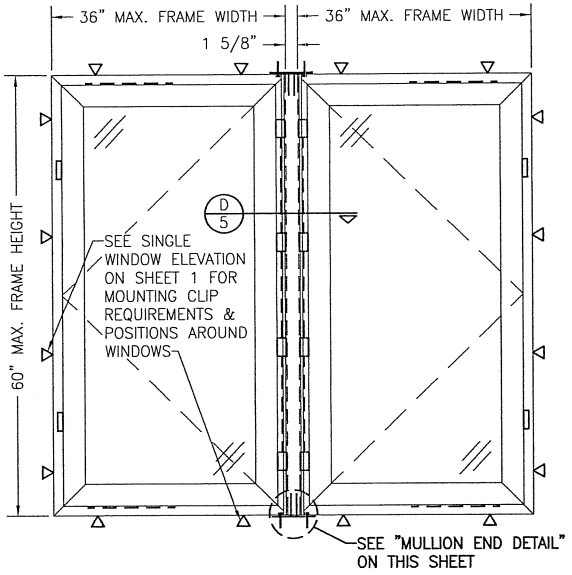

EXTERIOR ELEVATION
MULTIPLE WINDOWS ANCHORED WITH MOUNTING CLIPS
(NO RECEPTOR)
(MULTIPOINT LOCK, SNUBBER & SCISSOR HINGE CONDITION SHOWN. CAMLOCK & BUTT HINGE CONDITON ALSO APPLIES)
SCALE: 3/4"=1'-0"

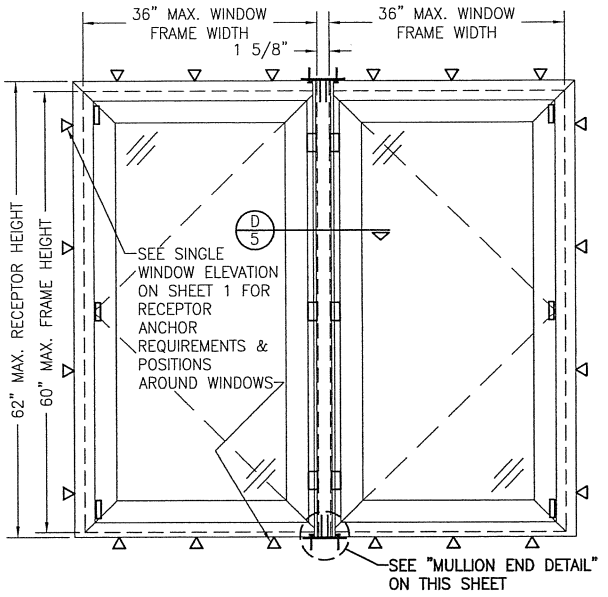

EXTERIOR ELEVATION
MULTIPLE WINDOWS ANCHORED WITH RECEPTOR
(CAMLOCK & BUTT HINGE CONDITION SHOWN. MULTIPOINT LOCK, SNUBBER & SCISSOR HINGE CONDITION ALSO APPLIES)
SCALE: 3/4"=1'-0"

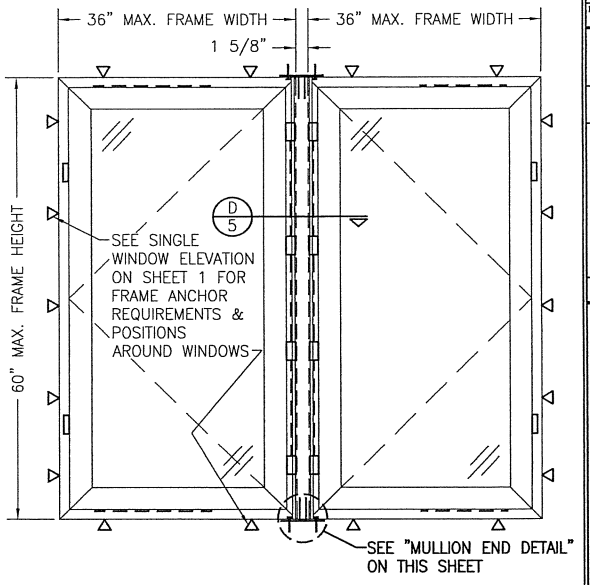

EXTERIOR ELEVATION
MULTIPLE WINDOW DIRECT MOUNTED
WITH FRAME SHEAR SCREWS
(NO RECEPTOR)
(MULTIPOINT LOCK, SNUBBER & SCISSOR HINGE CONDITION SHOWN. CAMLOCK & BUTT HINGE CONDITON ALSO APPLIES)
SCALE: 3/4"=1'-0"

EVALUATION OF THIS PRODUCT IS BASED ON APPLICABLE STANDARDS AND/OR INFORMATION & RESULTS FROM APPLICABLE TEST REPORTS. THE BUILDING CODE VERSION CONSIDERED WITH THIS EVALUATION WAS THAT IN FORCE AT THE TIME OF THE EVALUATION. IN THE EVENT OF CODE VERSION CHANGES/UPDATES OR IN THE EVENT THAT NEW OR ADDITIONAL TESTING IS COMPLETED ON THIS PRODUCT, PRIOR TO STATING CODE COMPLIANCE, THE MANUFACTURER SHALL CONFIRM WITH THE EVALUATION ENGINEER OF RECORD THAT EVERYTHING SPECIFIED HERE-IN IS CURRENT WITH ALL CURRENT TESTING, CODES AND APPLICABLE STANDARDS.

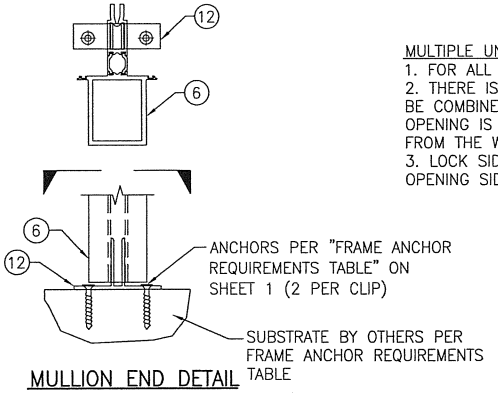

MULLION END DETAIL
(WINDOW FRAMES NOT SHOWN FOR CLARITY)
SCALE: N.T.S.

MULTIPLE UNIT NOTES:
1. FOR ALL DETAIL NOT SHOWN, SEE SINGLE WINDOW ELEVATION.
2. THERE IS NO LIMIT ON THE NUMBER OF WINDOWS THAT MAY BE COMBINED HORIZONTALLY INTO ONE OPENING PROVIDING THE OPENING IS DESIGNED TO SUPPORT ALL LOADS TRANSFERED FROM THE WINDOWS & THEIR MULLIONS.
3. LOCK SIDE OF WINDOWS MAY BE AT MULLION SIDE OR OPENING SIDE.

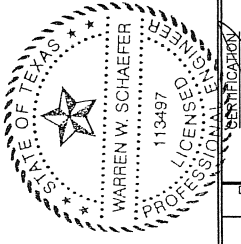

DRAWN BY: W.R.M.	CHECKED BY: W.W.S.
PLOT: 1=16	DATE: 01/28/13

NO.	REVISION DESCRIPTION	BY	DATE

JOB INFORMATION:
KAWNEER COMPANY, INC.
555 GUTHRIDGE COURT
NORCROSS, GA 30092
770-449-5555

DRAWING TITLE
AA900 ISOWEB OUT-SWING L.M.I. CASEMENT WINDOW

CONSULTANTS
W. W. SCHAEFER ENGINEERING & CONSULTING, P.A. (REG. NO. F-14980)
7480 150TH COURT NORTH
PALM BEACH GARDENS, FL 33418
PHONE: 561-744-3424

CERTIFICATION
MAR 04 2013
WARREN W. SCHAEFER, P.E.
P.E. NO. 113497

DRAWING NO. 1545T
REV.
SHEET NO. 2 OF 6

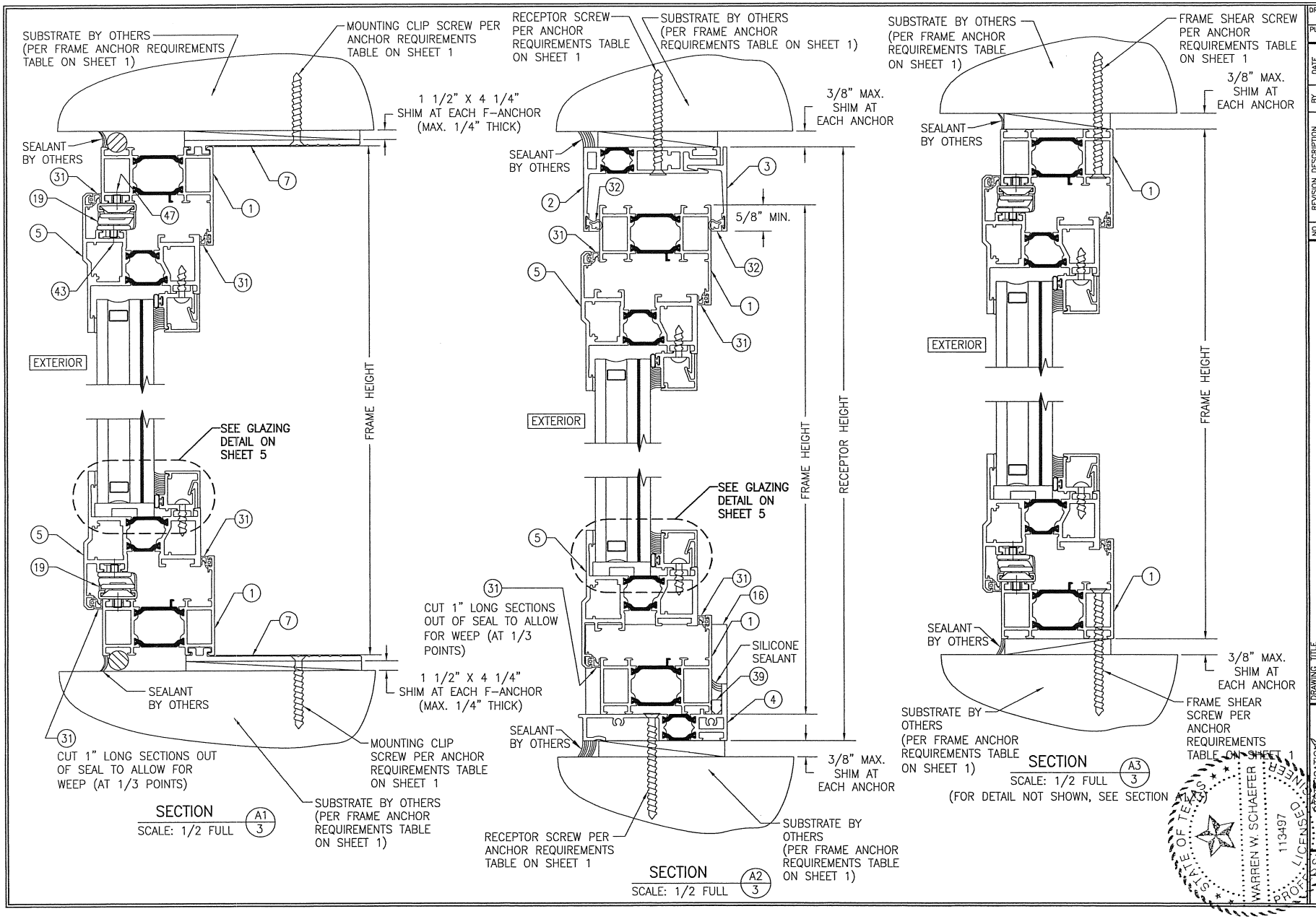

DRAWN BY: W.R.M.	CHECKED BY: W.W.S.
PLOT: 1=2	DATE: 01/28/13

NO.	REVISION DESCRIPTION	BY	DATE

DRAWING TITLE: AA900 ISOWEB OUT-SWING L.M.I. CASEMENT WINDOW

JOB INFORMATION: KAWNEER COMPANY, INC. 555 GUTHRIDGE COURT NORCROSS, GA 30092 770-449-5555

CONSULTANTS: W. W. SCHAEFER ENGINEERING & CONSULTING, P.A. (REG. NO. F-14980) 7480 150TH COURT NORTH PALM BEACH GARDENS, FL 33418 PHONE: 561-744-3424

MAR 04 2013

WARREN W. SCHAEFER, P.E. P.E. NO. 113497

STATE OF TEXAS PROFESSIONAL ENGINEER WARREN W. SCHAEFER 113497 LICENSED

DRAWING NO. 1545T REV.

SHEET NO. 3 OF 6

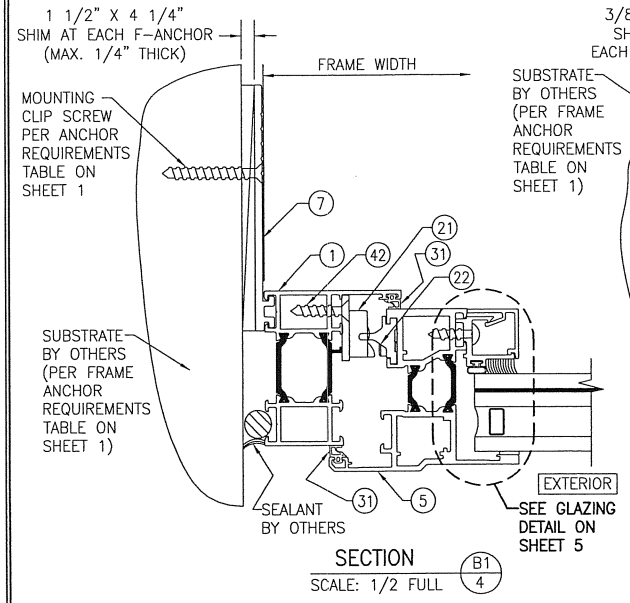

SECTION B1/4
SCALE: 1/2 FULL

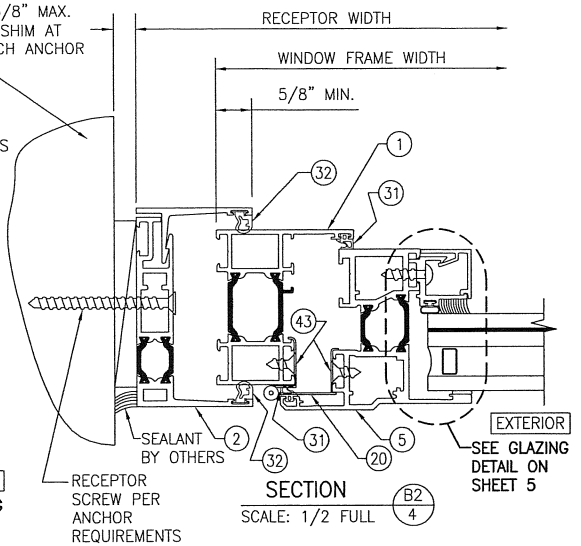

SECTION B2/4
SCALE: 1/2 FULL

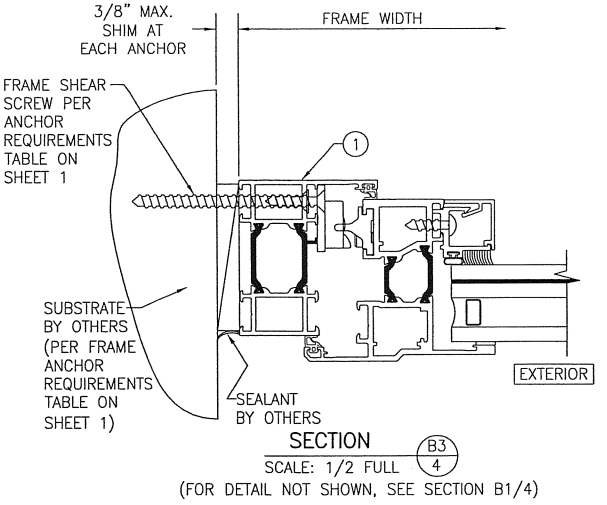

SECTION B3/4
SCALE: 1/2 FULL
(FOR DETAIL NOT SHOWN, SEE SECTION B1/4)

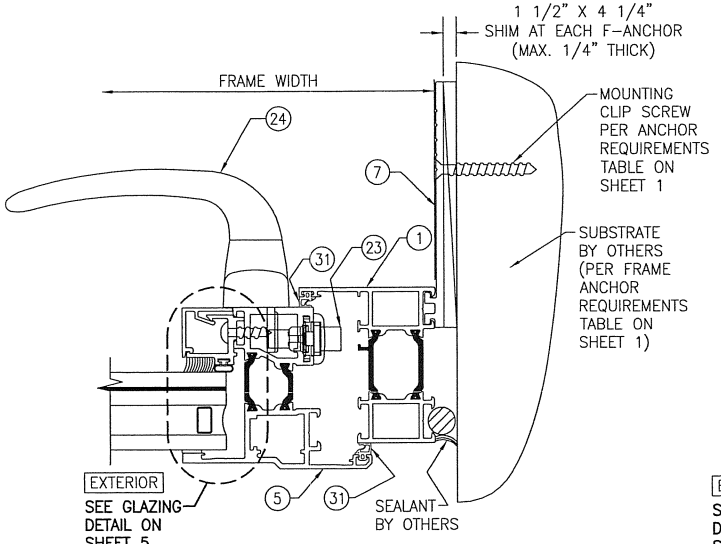

SECTION C1/4
SCALE: 1/2 FULL

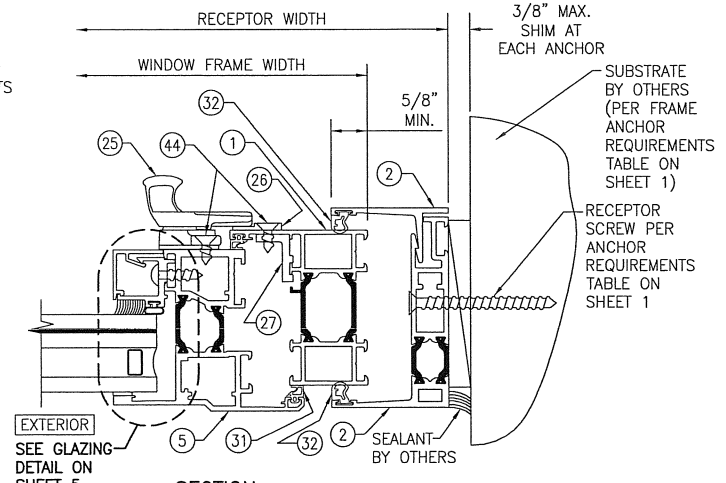

SECTION C2/4
SCALE: 1/2 FULL

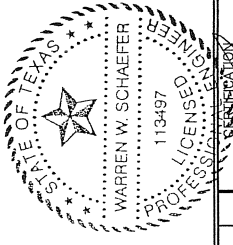

DRAWN BY: W.R.M.	CHECKED BY: W.W.S.
PLOT: 1=2	DATE: 01/28/13

NO.	REVISION DESCRIPTION	BY	DATE

DRAWING TITLE: AA900 ISOWEB OUT-SWING L.M.I. CASEMENT WINDOW

JOB INFORMATION: KAWNEER COMPANY, INC.
555 GUTHRIDGE COURT
NORCROSS, GA 30092
770-449-5555

CONSULTANTS: W. W. SCHAEFER ENGINEERING & CONSULTING, P.A. (REG. NO. F-14980)
7480 150TH COURT NORTH
PALM BEACH GARDENS, FL 33418
PHONE: 561-744-3424

CERTIFICATION: MAR 04 2013
WARREN W. SCHAEFER, P.E.
P.E. NO. 113497

DRAWING NO. 1545T
REV. B
SHEET NO. 4 OF 6

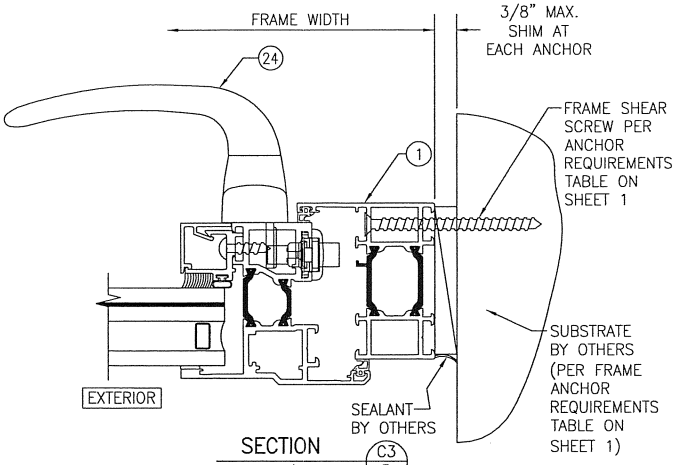

SECTION C3/5
SCALE: 1/2 FULL
(FOR DETAIL NOT SHOWN, SEE SECTION C1/4)

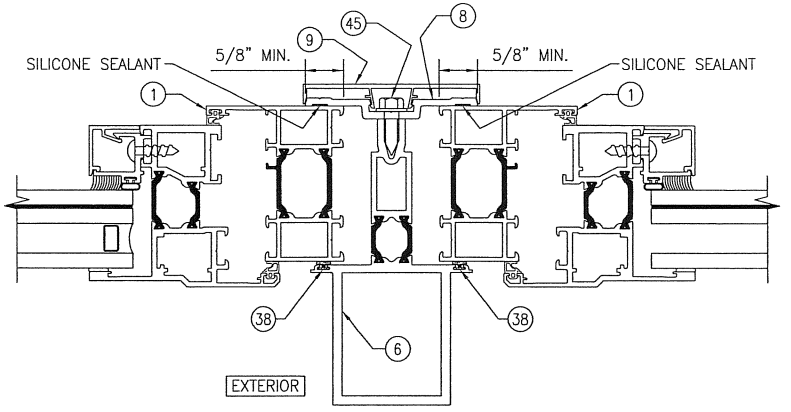

SECTION D/5
SCALE: 1/2 FULL
(FOR HARDARE CONDITIONS & DETAILS NOT SHOWN; SEE OTHER SECTIONS)

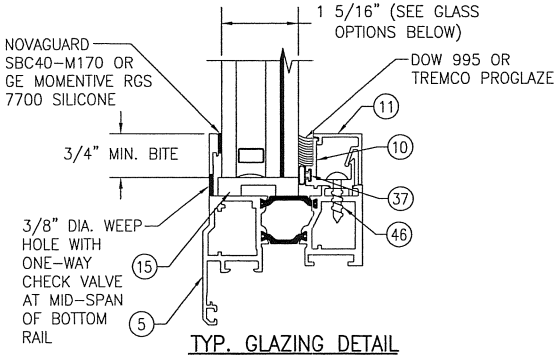

TYP. GLAZING DETAIL

GLASS OPTION 1: 1 5/16" LAMINATED I.G. (1/4" HT.ST./0.075" SOLUTIA SAFLEX CP/1/4" HT.ST. INTERIOR; 1/2" AIR SPACE; 1/4" TEMP. EXTERIOR)
GLASS OPTION 2: 1 5/16" LAMINATED I.G. (1/4" HT.ST./0.10" SOLUTIA SAFLEX HP/1/4" HT.ST. INTERIOR; 1/2" AIR SPACE; 1/4" TEMP. EXTERIOR)
GLASS OPTION 3: 1 5/16" LAMINATED I.G. (1/4" HT.ST./0.090" DUPONT SG/1/4" HT.ST. INTERIOR; 1/2" AIR SPACE; 1/4" TEMP. EXTERIOR)
GLASS OPTION 4: 1 5/16" LAMINATED I.G. (1/4" HT.ST./0.090" SOLUTIA SALFEX/1/4" HT.ST. INTERIOR; 1/2" AIR SPACE; 1/4" TEMP. EXTERIOR)
GLASS OPTION 5: 1 5/16" LAMINATED I.G. (1/4" HT.ST./0.090" DUPONT BUTICITE PVB/1/4" HT.ST. INTERIOR; 1/2" AIR SPACE; 1/4" TEMP. EXTERIOR)

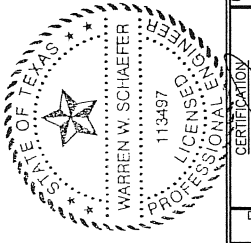

DRAWN BY: W.R.M.	CHECKED BY: W.W.S.
PLOT: 1=2	DATE: 01/28/13

NO.	REVISION DESCRIPTION	BY	DATE

DRAWING TITLE: AA900 ISOWEB OUT-SWING L.M.I. CASEMENT WINDOW

JOB INFORMATION: KAWNEER COMPANY, INC. 555 GUTHRIDGE COURT NORCROSS, GA 30092 770-449-5555

CONSULTANTS: W. W. SCHAEFER ENGINEERING & CONSULTING, P.A. (REG. NO. F-14980) 7480 150TH COURT NORTH PALM BEACH GARDENS, FL 33418 PHONE: 561-744-3424

CERTIFICATION: MAR 04 2013 WARREN W. SCHAEFER, P.E. P.E. NO. 113497

DRAWING NO. 1545T | REV.

SHEET NO. 5 OF 6

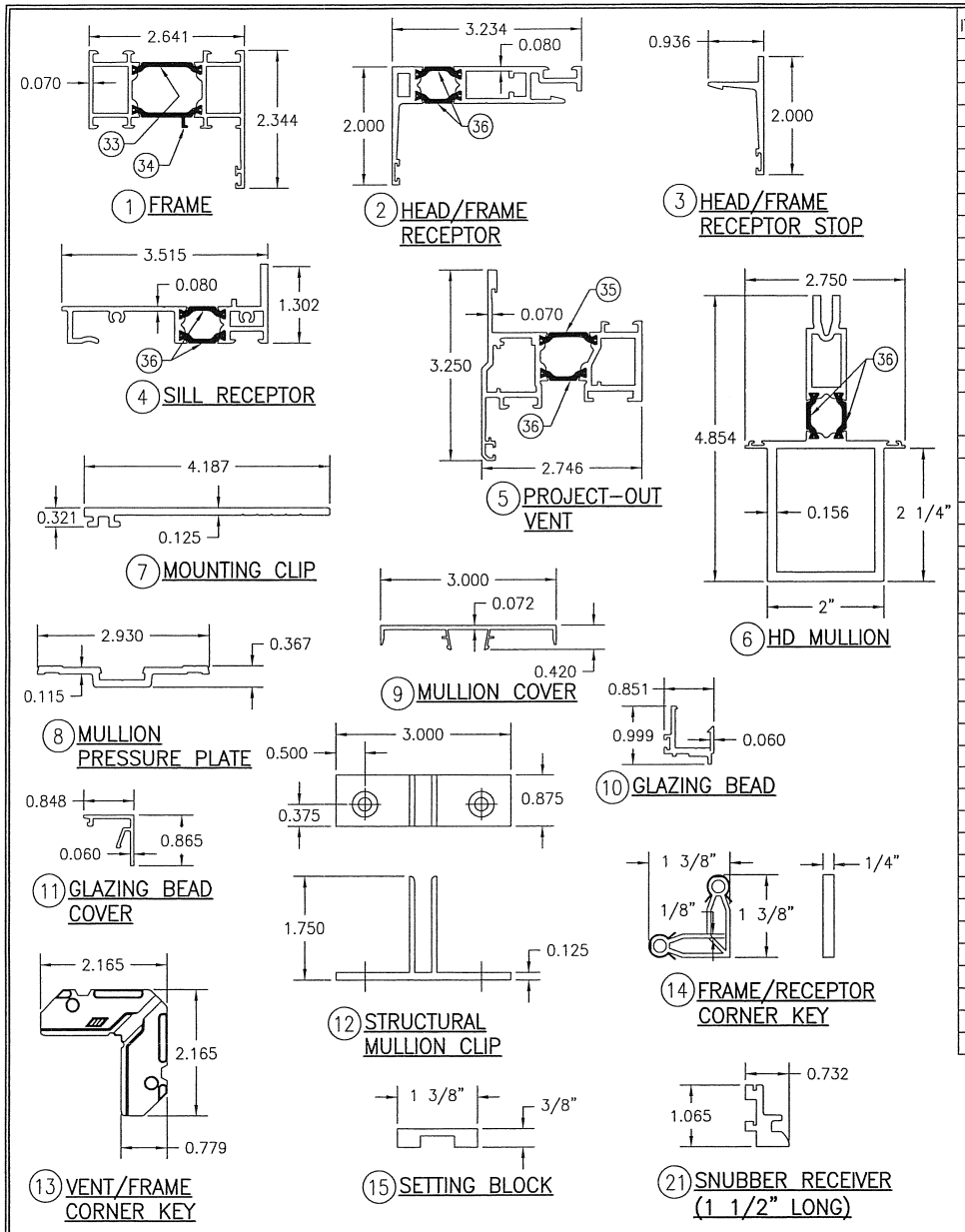

ITEM #	PART #	ITEM DESCRIPTION	MANUFACTURER/NOTES
		PARTS	
1	248-200	FRAME	6063-T6 ALUMINUM
2	248-205	HEAD/FRAME RECEPTOR	6063-T6 ALUMINUM
3	248-018	HEAD/FRAME RECEPTOR STOP	6063-T6 ALUMINUM
4	248-209	SILL RECEPTOR	6063-T6 ALUMINUM
5	248-206	PROJECT-OUT VENT	6063-T6 ALUMINUM
6	248-212	HD MULLION	6063-T6 ALUMINUM
7	248-448	MOUNTING CLIP	6063-T6 ALUMINUM
8	248-025	MULLION PRESSURE PLATE	6063-T6 ALUMINUM
9	248-026	MULLION COVER	6063-T6 ALUMINUM
10	248-067	GLAZING BEAD	6063-T6 ALUMINUM
11	248-068	GLAZING BEAD COVER	6063-T6 ALUMINUM
12	248-466	STRUCTURAL MULLION CLIP	6063-T6 ALUMINUM
13	248-415	VENT/FRAME CORNER KEY	CAST ALUMINUM
14	716-413	FRAME/RECEPTOR CORNER KEY	CAST ZINC/CARBON STEEL
15	127-132	SETTING BLOCK	EPDM (QTY. AS REQUIRED)
16	248-463	3.35" X 2.75" X 0.063" SUB-SILL END DAM PLATE	5052 H32 ALUMINUM
		HARDWARE	
19	248-451	4-BAR HINGE (2 PER WINDOW; ALL WINDOW SIZES)	6061-T6 ALUMINUM BY: ADVANTAGE MANUFACTURING
20	248-475	BUTT HINGE	6063-T6 ALUMINUM
21	248-435	SNUBBER RECEIVER	BY: ADVANTAGE MANUFACTURING
22	248-425	SNUBBER DRIVER	BY: ADVANTAGE MANUFACTURING
23	248-433	MULTIPOINT LOCK	BY: GIESSE
24	248-428	HANDLE TO OPERATE MULTIPOINT LOCK	BY: GIESSE
25	225-405/406	CAMLOCK/HANDLE	BY: BRONZE CRAFT
26	248-423	CAMLOCK HANDLE STRIKE	BY: ADVANTAGE MANUFACTURING
27	248-441	CAMLOCK STRIKE BACKUP PLATE	6063-T6 ALUMINUM
		SEALS AND SEALANTS	
31	127-112	VENT WEATHERING	EPDM
32	027-883	1/4" RECEPTOR WEATHERING	FLEXIBLE PVC
33	248-400	DEBRIDGING/THERMAL BREAK	TECATHERM-66-GF
34	248-401	DEBRIDGING/THERMAL BREAK	TECATHERM-66-GF
35	248-403	DEBRIDGING/THERMAL BREAK	TECATHERM-66-GF
36	248-404	DEBRIDGING/THERMAL BREAK	TECATHERM-66-GF
37	127-074	0.215" BULB GASKET	POLYPROPYLENE
38	027-874	WEATHERING	VISTAPLEX/POLYPROPYLENE
39	127-038	1/4" SEALANT SPACER	SCR-900
		MISC. FASTENERS	
42	028-520	#10 X 1" FHTF SCREW	1 PER SNUBBER
43	128-940	#10-32 X 1/4" PHMS TORX SCREW	(HINGE SCREW) 2 PER VENT
44	128-415	#10 X 7/16" FHTF SCREW	4 PER CAMLOK ASSEMBLY
45	128-943	1/4" X 3/4" HHTF SCREW	WITHIN 3" OF CORNERS & 9 MAX. O.C.
46	128-507	#10 X 3/4" PHTF SCREW	WITHIN 3" OF CORNERS & 18 MAX. O.C.
47	128-534	#10 X 5/8" FTHTFS SCREW	(HINGE SCREW) 3 PER FRAME

MAR 04 2013

DRAWN BY: W.R.M.	CHECKED BY: W.W.S.
PLOT: 1=2	DATE: 01/28/13

NO.	REVISION DESCRIPTION	BY	DATE

DRAWING TITLE: AA900 ISOWEB OUT-SWING L.M.I. CASEMENT WINDOW

JOB INFORMATION: KAWNEER COMPANY, INC. 555 GUTHRIDGE COURT NORCROSS, GA 30092 770-449-5555

CONSULTANTS: W. W. SCHAEFER ENGINEERING & CONSULTING, P.A. (REG. NO. F-14980) 7460 150TH COURT NORTH, PALM BEACH GARDENS, FL 33418 PHONE: 561-744-3424

CERTIFICATION: STATE OF FLORIDA WARREN W. SCHAEFER P.E. LICENSE NO. 13497 STATE OF FLORIDA PROFESSIONAL ENGINEER

DRAWING NO. 15451 REV. A

SHEET NO. 6 OF 6