ATRIUM COMPANIES, INC.

8300/8301/121/131 HORIZONTAL SLIDING WINDOW (NON-IMPACT)

INSTALLATION NOTES:

1. *ONE (1)* INSTALLATION ANCHOR IS REQUIRED AT EACH ANCHOR LOCATION SHOWN, UNLESS OTHERWISE STATED.
2. THE NUMBER OF INSTALLATION ANCHORS DEPICTED IS THE MINIMUM NUMBER OF ANCHORS TO BE USED FOR PRODUCT INSTALLATION.
3. INSTALL INDIVIDUAL INSTALLATION ANCHORS WITHIN A TOLERANCE OF ±1/2 INCH OF THE DEPICTED LOCATION IN THE ANCHOR LAYOUT DETAIL (I.E., WITHOUT CONSIDERATION OF TOLERANCES). TOLERANCES ARE NOT CUMULATIVE FROM ONE INSTALLATION ANCHOR TO THE *NEXT*.
4. FOR INSTALLATION INTO WOOD FRAMING USE *#10 WOOD SCREWS* OF SUFFICIENT LENGTH TO ACHIEVE *1 1/2 INCH* MINIMUM EMBEDMENT INTO WOOD SUBSTRATE.
5. FOR INSTALLATION THROUGH 1X BUCK TO CONCRETE/MASONRY, OR DIRECTLY INTO CONCRETE/MASONRY, USE *3/16 INCH DIAMETER ITW TAPCON* OF SUFFICIENT LENGTH TO ACHIEVE *1 1/4 INCH* MINIMUM EMBEDMENT.
6. FOR INSTALLATION INTO METAL STUD OR APPROVED MULLION USE ONE (1) #10 SELF-TAPPING SCREW PER LOCATION OF SUFFICIENT LENGTH TO ACHIEVE *3 THREADS* MINIMUM PENETRATION BEYOND METAL FRAME SUBSTRATE.
7. MINIMUM EMBEDMENT AND EDGE DISTANCE EXCLUDE WALL FINISHES, INCLUDING BUT NOT LIMITED TO STUCCO, FOAM, BRICK VENEER, AND SIDING.
8. INSTALLATION ANCHORS AND ASSOCIATED HARDWARE MUST BE MADE OF CORROSION RESISTANT MATERIAL OR HAVE A CORROSION RESISTANT COATING. DISSIMILAR MATERIALS MUST BE SEPARATED OR COATED IN ACCORDANCE WITH FBC SECTION 2003.8.4.
9. INSTALLATION ANCHORS SHALL BE INSTALLED IN ACCORDANCE WITH ANCHOR MANUFACTURER'S INSTALLATION INSTRUCTIONS, AND ANCHORS SHALL NOT BE USED IN SUBSTRATES WITH STRENGTHS LESS THAN THE MINIMUM STRENGTH SPECIFIED BY THE ANCHOR MANUFACTURER.
10. INSTALLATION ANCHOR CAPACITIES FOR PRODUCTS HEREIN ARE BASED ON SUBSTRATE MATERIALS WITH THE FOLLOWING PROPERTIES:
    A. WOOD - MINIMUM SPECIFIC GRAVITY OF 0.42.
    B. CONCRETE -MINIMUM COMPRESSIVE STRENGTH OF 2700 PSI.
    C. MASONRY - STRENGTH CONFORMANCE TO ASTM C-90
    D. STEEL - MINIMUM YIELD STRENGTH OF 33 KSI. MINIMUM WALL THICKNESS OF 47.8 MILS. (18 GUAGE)
    E. ALUMINUM - MINIMUM ALLOY AND TEMPERING OF 6063-T5. MINIMUM WALL THICKNESS OF 1/8 INCH.

GENERAL NOTES:

1. THE PRODUCT SHOWN HEREIN IS DESIGNED AND MANUFACTURED TO COMPLY WITH THE 2006 INTERNATIONAL BUILDING CODE (IBC) AND INTERNATIONAL RESIDENTIAL CODE (IRC) WITH 2006 TEXAS REVISIONS, EFFECTIVE JANUARY 1,2008, AND HAS BEEN EVALUATED ACCORDING TO THE FOLLOWING:
   - AAMA/WDMA/CSA 101/I.S.2/A440-05
2. ADEQUACY OF THE EXISTING STRUCTURAL CONCRETE/MASONRY AND METAL STUD FRAMING AS A MAIN WIND FORCE RESISTING SYSTEM CAPABLE OF WITHSTANDING AND TRANSFERRING APPLIED PRODUCT LOADS TO THE FOUNDATION IS THE RESPONSIBILITY OF THE ENGINEER OR ARCHITECT OF RECORD FOR THE PROJECT OF INSTALLATION.
3. 1X AND 2X BUCKS SHALL BE DESIGNED AND ANCHORED TO PROPERLY TRANSFER ALL LOADS TO THE STRUCTURE. BUCK DESIGN AND INSTALLATION IS THE RESPONSIBILITY OF THE ENGINEER OR ARCHITECT OF RECORD FOR THE PROJECT OF INSTALLATION.
4. THE INSTALLATION DETAILS DESCRIBED HEREIN ARE GENERIC AND MAY NOT REFLECT ACTUAL CONDITIONS FOR A SPECIFIC SITE. IF SITE CONDITIONS CAUSE INSTALLATION TO DEVIATE FROM THE REQUIREMENTS DETAILED HEREIN, A LICENSED ENGINEER OR ARCHITECT SHALL PREPARE SITE SPECIFIC DOCUMENTS FOR USE WITH THIS DOCUMENT.
5. APPROVED IMPACT PROTECTIVE SYSTEM IS REQUIRED TO PROTECT THIS PRODUCT IN AREAS REQUIRING IMPACT RESISTANCE.
6. WINDOW FRAME MATERIAL: *PVC/VINYL*
7. GLASS SHALL MEET THE REQUIREMENTS OF ASTM E1300-04 GLASS CHARTS. SEE SHEET *4* FOR GLAZING DETAILS..
8. *DESIGNATIONS "X" AND "O" STAND FOR THE FOLLOWING:*
   X: OPERABLE PANEL
   O: FIXED PANEL

TABLE OF CONTENTS

SHEET	REVISION	SHEET DESCRIPTION
1	-	GENERAL & INSTALLATION NOTES
2	-	ELEVATIONS & ANCHOR LAYOUTS
3	-	VERTICAL SECTIONS
4	-	HORIZONTAL SECTIONS & GLAZING DETAIL
5	-	COMPONENTS & BILL OF MATERIALS

OVERALL SIZE		CONFIGURATION	DESIGN PRESSURE	MISSILE IMPACT RATING
WIDTH	HEIGHT			
78"	48"	XO	+/- 40 PSF	NON-IMPACT
96"	48"	XOX	+/- 30 PSF	NON-IMPACT

ALEX SPYROU
2013.07.25 14:18:55
-04'00'

ATRIUM COMPANIES, INC.
9001 AMBASSADOR ROW
DALLAS, TEXAS 75247
PH: (214) 637-2696 FX: (214) 424-6734

TITLE: 8300/8301/121/131 HORIZONTAL SLIDING WINDOW GENERAL AND INSTALLATION NOTES

PREPARED BY:
BUILDING DROPS
398 E. DANIA BEACH, BLVD, STE. 338
DANIA BEACH, FL 33004
PH: (954) 399-8478 FX: (954) 744-4738

REVISIONS

NO.	DESCRIPTION	BY	DATE

STATE OF TEXAS
ALEXIS SPYROU
102957
LICENSED
PROFESSIONAL ENGINEER
72573

DATE: 06.20.13 | DWN BY: ADS | CHK BY: HFN | SCALE: NTS

DWG #: ATR059

SHEET: 1 OF 5

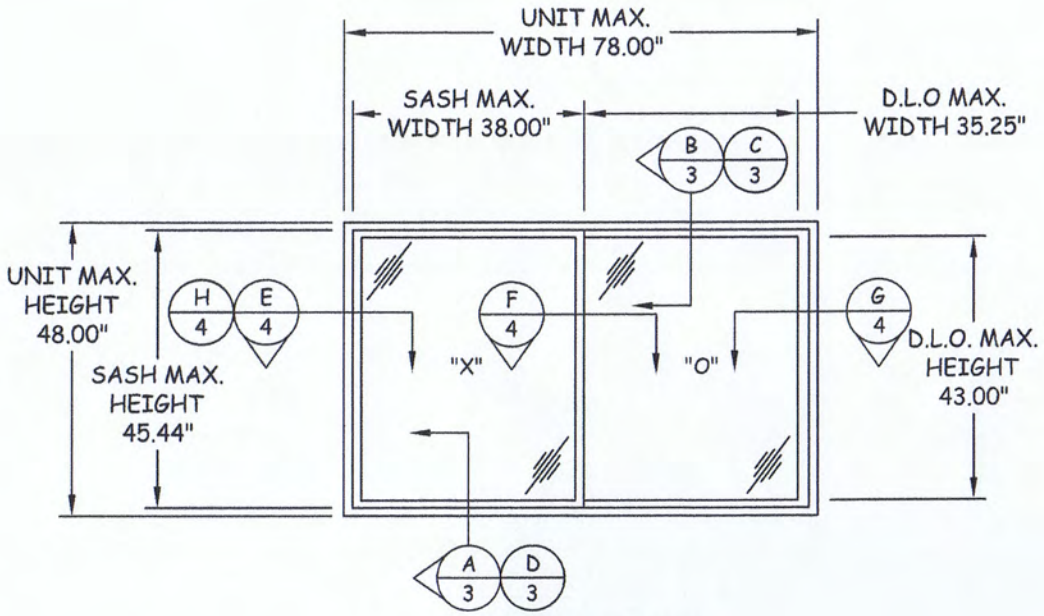

ELEVATION

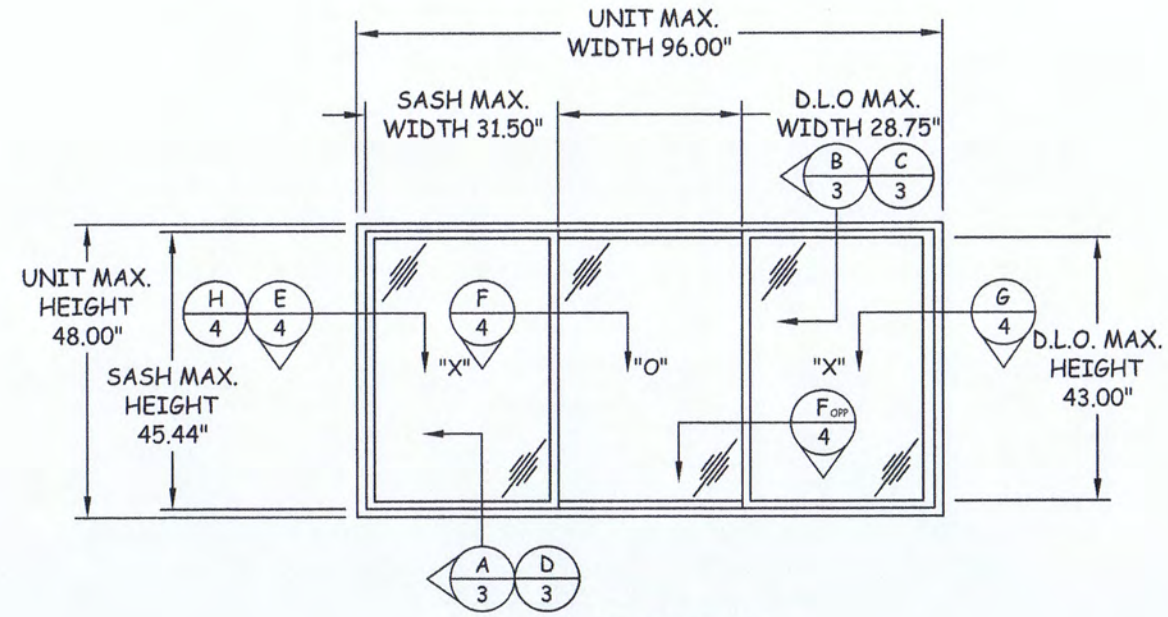

ELEVATION

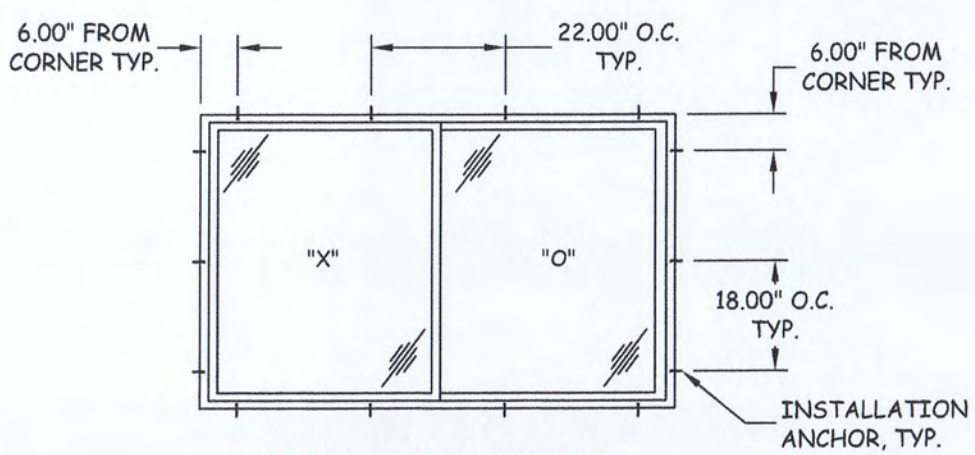

ANCHOR LAYOUT

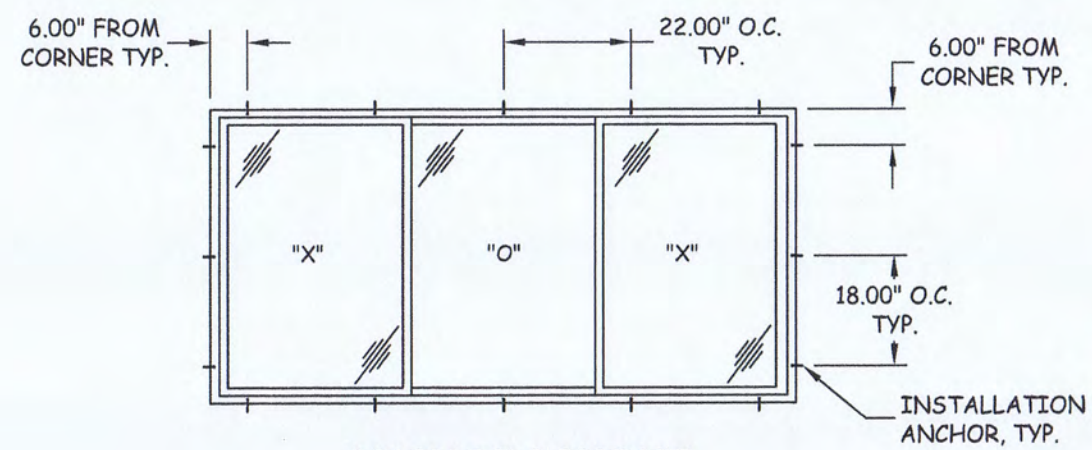

ANCHOR LAYOUT

ATRIUM
COMPANIES, INC.
9001 AMBASSADOR ROW
DALLAS, TEXAS 75247
PH: (214) 637-2696 FX: (214) 424-6734

TITLE: 8300/8301/121/131
HORIZONTAL SLIDING WINDOW
ELEVATIONS & ANCHOR LAYOUTS

PREPARED BY:
BUILDING DROPS
398 E. DANIA BEACH, BLVD, STE. 338
DANIA BEACH, FL 33004
PH: (954) 399-8478 FX: (954) 744-4738

REVISIONS

NO.	DESCRIPTION	BY	DATE

STATE OF TEXAS
ALEXIS SPYROU
102957
LICENSED
PROFESSIONAL ENGINEER
7-25-13
ALEXIS SPYROU
TEXAS P.E. NO. 102957
398 E. DANIA BEACH BLVD., STE. 338
DANIA BEACH, FL 33004

DATE: 06.20.13	DWN BY: ADS	CHK BY: HFN	SCALE: NTS

DWG #: ATR059

SHEET: 2 OF 5

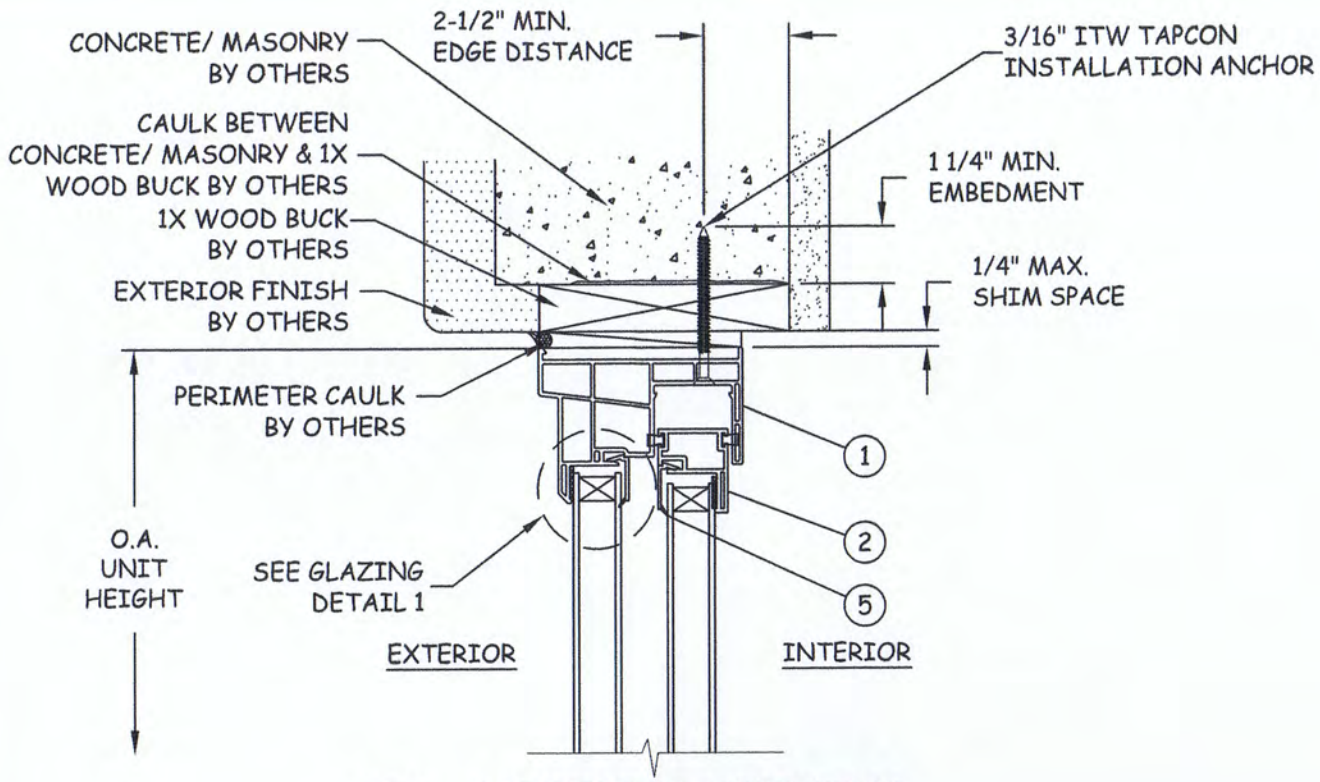

B/3 VERTICAL SECTION

HEAD - CONCRETE/MASONRY
FINLESS INSTALLATION

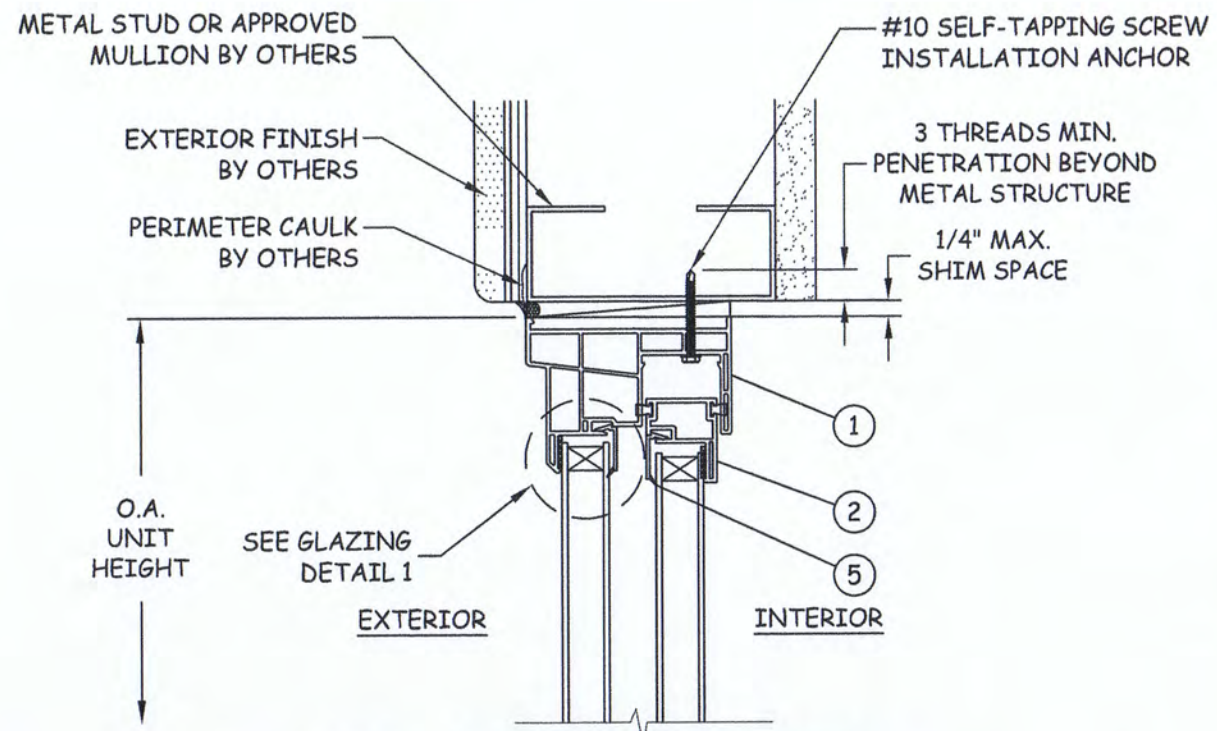

C/3 VERTICAL SECTION

HEAD - METAL STUD
FINLESS INSTALLATION

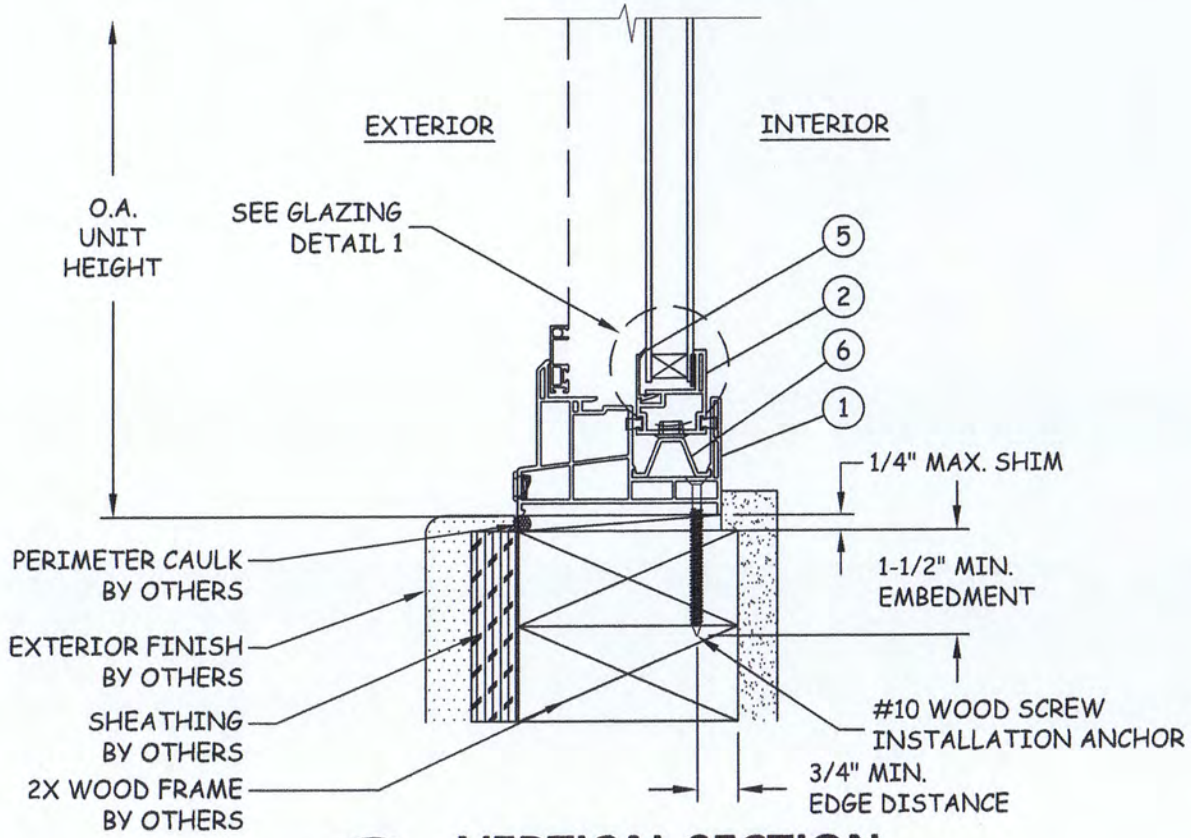

A/3 VERTICAL SECTION

SILL - 2X WOOD FRAME
FINLESS INSTALLATION

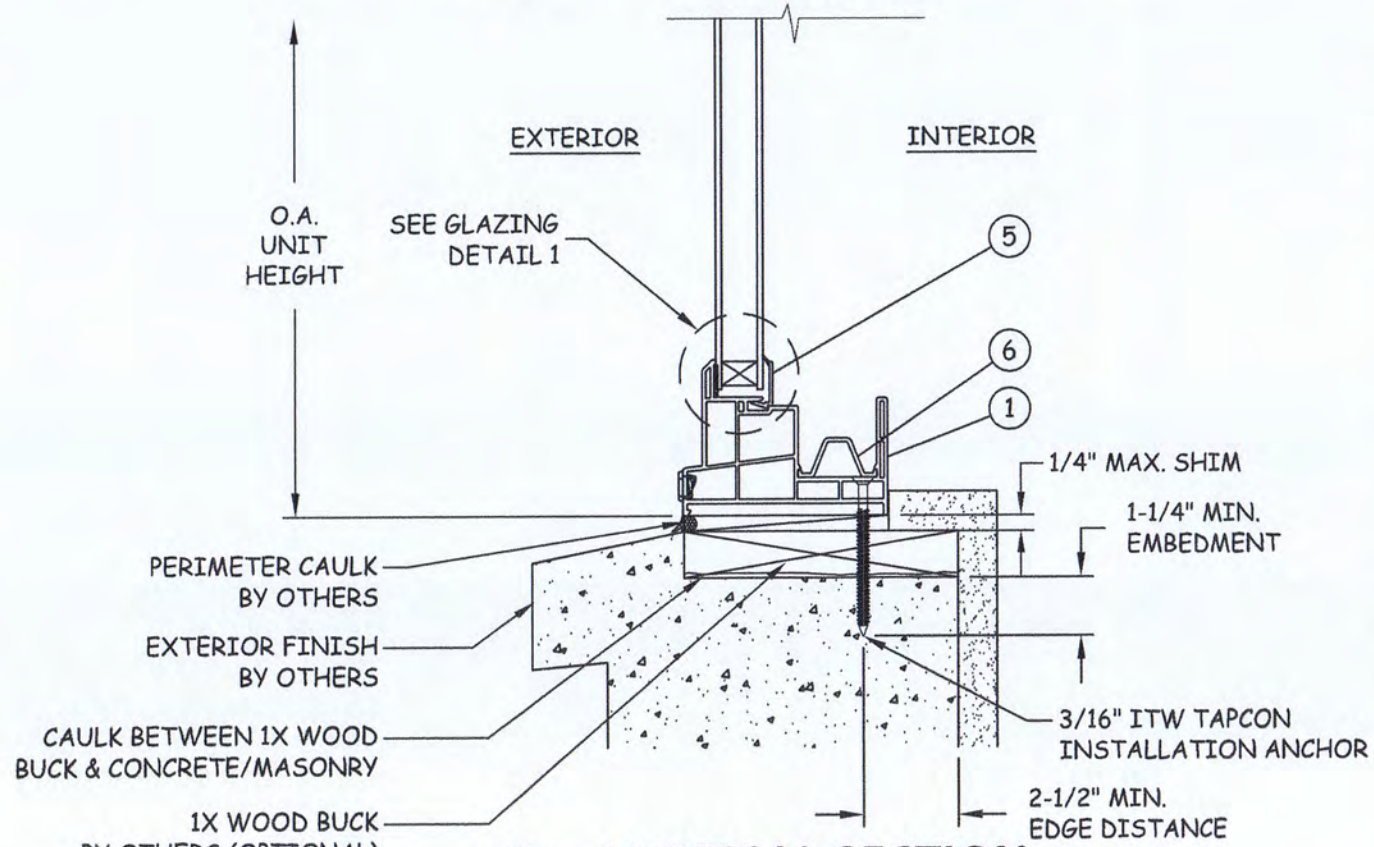

D/3 VERTICAL SECTION

SILL - CONCRETE/MASONRY
FINLESS INSTALLATION

ATRIUM COMPANIES, INC.
9001 AMBASSADOR ROW
DALLAS, TEXAS 75247
PH: (214) 637-2696 FX: (214) 424-6734

TITLE: 8300/8301/121/131 HORIZONTAL SLIDING WINDOW
VERTICAL SECTIONS

PREPARED BY:
BUILDING DROPS
398 E. DANIA BEACH, BLVD, STE. 338
DANIA BEACH, FL 33004
PH: (954) 399-8478 FX: (954) 744-4738

REVISIONS

NO.	DESCRIPTION	BY	DATE

STATE OF TEXAS
ALEXIS SPYROU
102957
LICENSED
PROFESSIONAL ENGINEER

DATE: 06.20.13	DWN BY: ADS	CHK BY: HFN	SCALE: NTS

DWG #: ATR059

SHEET: 3 OF 5

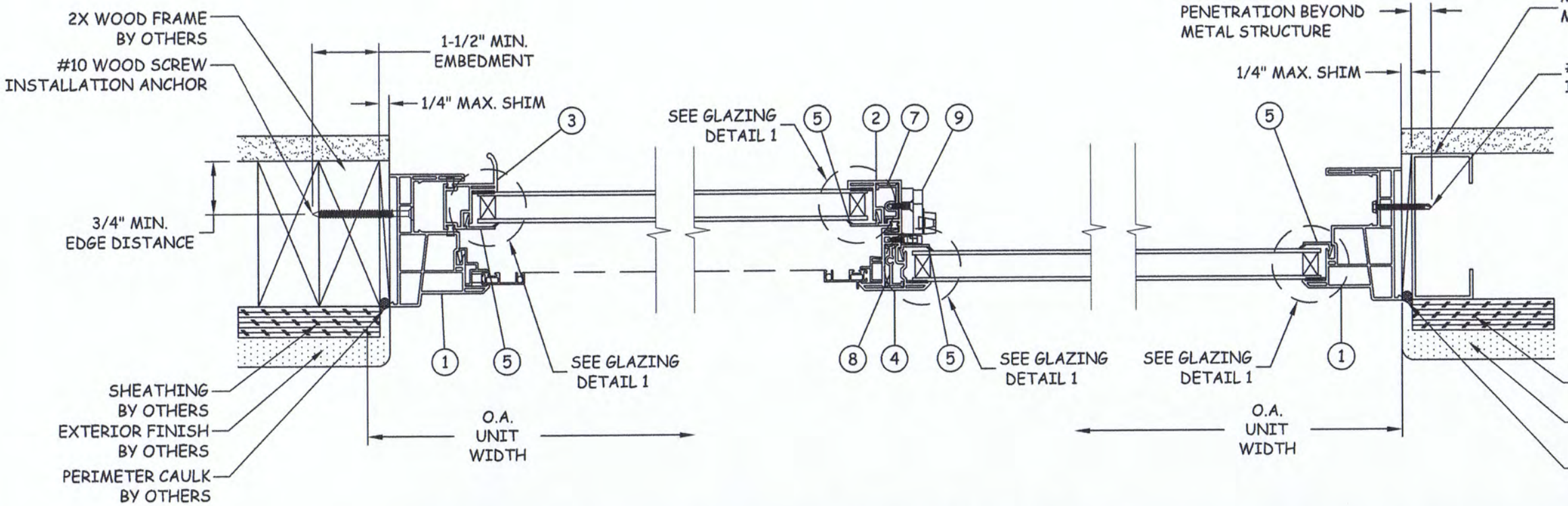

E/4 HORIZONTAL SECTION

JAMB - 2X WOOD FRAME
FINLESS INSTALLATION

F/4 HORIZONTAL SECTION

MEETING STILE

G/4 HORIZONTAL SECTION

JAMB - METAL STUD FRAME
FINLESS INSTALLATION

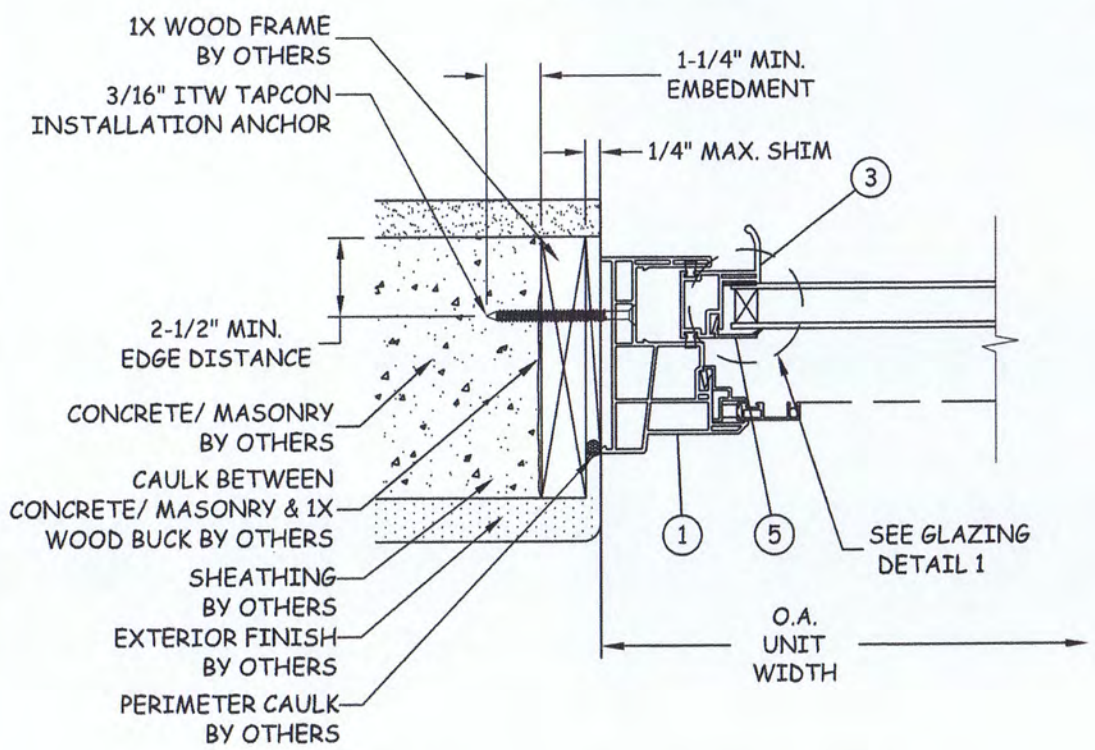

H/4 HORIZONTAL SECTION

JAMB - CONCRETE/MASONRY
FINLESS INSTALLATION

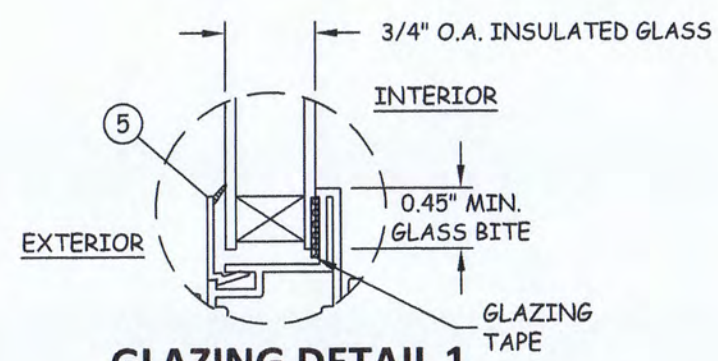

GLAZING DETAIL 1

NOTE:
GLASS THICKNESS AND TYPE MAY VARY PER ASTM E 1300-04 GLASS CHART REQUIREMENTS

ATRIUM COMPANIES, INC.
9001 AMBASSADOR ROW
DALLAS, TEXAS 75247
PH: (214) 637-2696 FX: (214) 424-6734

TITLE: 8300/8301/121/131 HORIZONTAL SLIDING WINDOW
HORIZONTAL SECTIONS

PREPARED BY:
BUILDING DROPS
398 E. DANIA BEACH, BLVD, STE. 338
DANIA BEACH, FL 33004
PH: (954) 399-8478 FX: (954) 744-4738

REVISIONS

NO.	DESCRIPTION	BY	DATE

STATE OF TEXAS
ALEXIS SPYROU
102957
LICENSED
PROFESSIONAL ENGINEER
7-25-13

DATE: 06.20.13
DWN BY: ADS
CHK BY: HFN
SCALE: NTS

DWG #: ATR059

SHEET: 4 OF 5

BILL OF MATERIALS			
NO.	DESCRIPTION	MATERIAL	MANUFACTURER
1	FRAME	PVC/VINYL	ATRIUM
2	SASH RAIL & STILE	PVC/VINYL	ATRIUM
3	OPERATING STILE	PVC/VINYL	ATRIUM
4	FIXED MEETING STILE	PVC/VINYL	ATRIUM
5	GLAZING BEAD	PVC/VINYL	ATRIUM
6	ROLLER TRACK	PVC/VINYL	ATRIUM
7	OPERABLE MEETING STILE REINFORCEMENT	ALUMINUM 6063-T5	ATRIUM
8	FIXED MEETING STILE REINFORCEMENT	ALUMINUM 6063-T5	ATRIUM
9	CAM LOCK	ZINC DIE-CAST	ATRIUM

1 FRAME
PVC/VINYL
TYPICAL WALL THICKNESS: .065"

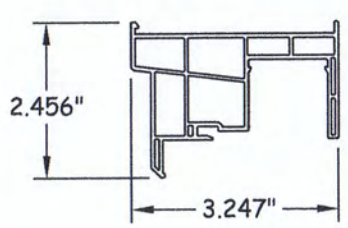

2 SASH RAIL & STILE
PVC/VINYL
TYPICAL WALL THICKNESS: .065"

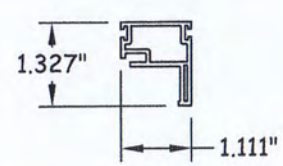

3 OPERATING STILE
PVC/VINYL
TYPICAL WALL THICKNESS: .065"

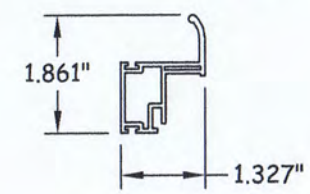

4 FIXED MEETING STILE
PVC/VINYL
TYPICAL WALL THICKNESS: .065"

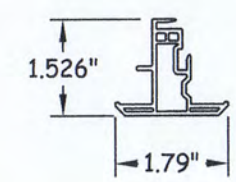

5 GLAZING BEAD
PVC/VINYL
TYPICAL WALL THICKNESS: .050"

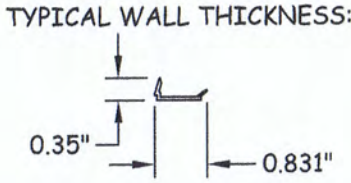

6 ROLLER TRACK
PVC/VINYL
TYPICAL WALL THICKNESS: .063"

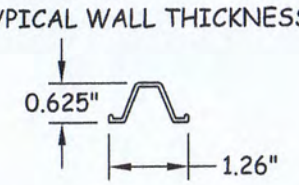

7 OPERABLE MEETING STILE REINFORCEMENT
ALUMINUM 6063-T5
TYPICAL WALL THICKNESS: .050"

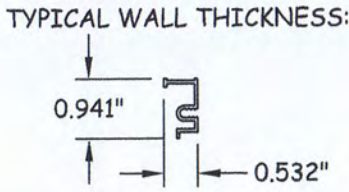

8 FIXED MEETING STILE REINFORCEMENT
ALUMINUM 6063-T5
TYPICAL WALL THICKNESS: .050"

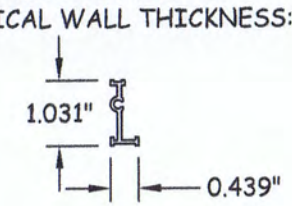

9 CAM LOCK
ZINC DIE-CAST

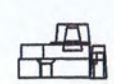

ATRIUM COMPANIES, INC.
9001 AMBASSADOR ROW
DALLAS, TEXAS 75247
PH: (214) 637-2696 FX: (214) 424-6734

TITLE: 8300/8301/121/131
HORIZONTAL SLIDING WINDOW
COMPONENTS & BILL OF MATERIALS

PREPARED BY:
BUILDING DROPS
398 E. DANIA BEACH, BLVD, STE. 338
DANIA BEACH, FL 33004
PH: (954) 399-8478 FX: (954) 744-4738

REVISIONS

NO.	DESCRIPTION	BY	DATE

STATE OF TEXAS
ALEXIS SPYROU
102957
LICENSED
PROFESSIONAL ENGINEER
7-25-13

DATE: 06.20.13	DWN BY: ADS	CHK BY: HFN	SCALE: NTS

DWG #: ATR059

SHEET: 5 OF 5