| REVISIONS | | | |
|---|---|---|---|
| REV | DESCRIPTION | DATE | APPROVED |
| A | REVISED RATING 54"X84" UNIT & ANCHORS | 11/28/12 | R.L. |

NOTES:

1. THE PRODUCT SHOWN HEREIN IS DESIGNED AND MANUFACTURED TO COMPLY WITH REQUIREMENTS OF THE IBC AND IRC WITH STATE OF TEXAS MODIFICATIONS.
2. WOOD FRAMING AND MASONRY OPENING TO BE DESIGNED AND ANCHORED TO PROPERLY TRANSFER ALL LOADS TO STRUCTURE. FRAMING AND MASONRY OPENING IS THE RESPONSIBILITY OF THE ARCHITECT OR ENGINEER OF RECORD.
3. 1X BUCK OVER MASONRY/CONCRETE IS OPTIONAL. WHERE 1X BUCK IS NOT USED DISSIMILAR MATERIALS MUST BE SEPARATED WITH APPROVED COATING OR MEMBRANE. SELECTION OF COATING OR MEMBRANE IS THE RESPONSIBILITY OF THE ARCHITECT OR ENGINEER OF RECORD.
4. ALLOWABLE STRESS INCREASE OF 1/3 WAS NOT USED IN THE DESIGN OF THE PRODUCT SHOWN HEREIN. WIND LOAD DURATION FACTOR Cd=1.6 WAS USED FOR WOOD ANCHOR CALCULATIONS.
5. FRAME MATERIAL: EXTRUDED RIGID PVC.
6. UNITS MUST BE GLAZED PER ASTM E1300-04, SEE SHEET 2 FOR GLASS OPTIONS.
7. APPROVED IMPACT PROTECTIVE SYSTEM <u>IS REQUIRED</u> FOR THIS PRODUCT IN WIND BORNE DEBRIS REGIONS.
8. SHIM AS REQUIRED AT EACH INSTALLATION ANCHOR WITH LOAD BEARING SHIM. SHIM WHERE SPACE OF 1/16" OR GREATER OCCURS. MAXIMUM ALLOWABLE SHIM STACK TO BE 1/4".
9. FOR FRAME INSTALLATION INTO WOOD FRAMING OR 2X BUCK USE #14 WOOD SCREWS WITH SUFFICIENT LENGTH TO ACHIEVE A 1 3/4" MINIMUM EMBEDMENT INTO SUBSTRATE. LOCATE ANCHORS AS SHOWN IN ELEVATIONS AND INSTALLATION DETAILS.
10. FOR FRAME INSTALLATION INTO MASONRY/CONCRETE USE 1/4" TAPCONS WITH SUFFICIENT LENGTH TO ACHIEVE A 1 1/4" MINIMUM EMBEDMENT INTO SUBSTRATE WITH 2 1/2'' MINIMUM EDGE DISTANCE. LOCATE ANCHORS AS SHOWN IN ELEVATIONS AND INSTALLATION DETAILS.
11. FOR FRAME INSTALLATION INTO METAL STRUCTURE USE #14 SMS OR SELF DRILLING SCREWS WITH SUFFICIENT LENGTH TO ACHIEVE 3 THREADS MINIMUM BEYOND STRUCTURE INTERIOR WALL. LOCATE ANCHORS AS SHOWN IN ELEVATIONS AND INSTALLATION DETAILS.
12. ALL FASTENERS TO BE CORROSION RESISTANT.
13. INSTALLATION ANCHORS SHALL BE INSTALLED IN ACCORDANCE WITH ANCHOR MANUFACTURER'S INSTALLATION INSTRUCTIONS AND ANCHORS SHALL NOT BE USED IN SUBSTRATES WITH STRENGTHS LESS THAN THE MINIMUM STRENGTH SPECIFIED BELOW:
    A. WOOD – MINIMUM SPECIFIC GRAVITY OF G=0.42
    B. CONCRETE – MINIMUM COMPRESSIVE STRENGTH OF 3,192 PSI.
    C. MASONRY – STRENGTH CONFORMANCE TO ASTM C-90, GRADE N, TYPE 1 (OR GREATER).
    D. METAL STRUCTURE: STEEL 18GA, 33KSI OR ALUMINUM 6063-T5 1/8" THICK MINIMUM

SIGNED: 11/28/2012

TABLE OF CONTENTS


| SHEET NO. | DESCRIPTION |
|---|---|
| 1 | NOTES |
| 2 –3 | ELEVATIONS |
| 4 | B.O.M. AND CROSS SECTIONS |
| 5 – 6 | INSTALLATION DETAILS |
| 7 | COMPONENTS. |



WinDoor INCORPORATED
7500 AMSTERDAM DRIVE
ORLANDO, FL 32832
Phone: 407.481.8400
Fax: 407.481.0505
www.windoorinc.com


V130 VINYL FIXED WINDOW
SINGLE AND TRIPLE
NOTES

| DRAWN: | DWG NO. | REV |
|---|---|---|
| V.L. | 08-01757 | A |
| SCALE NTS | DATE 08/24/12 | SHEET 1 OF 7 |

STATE OF TEXAS
LUIS R. LOMAS
101889
LICENSED
PROFESSIONAL ENGINEER

Luis R. Lomas P.E.
TX No.: 101889

| REVISIONS | | | |
|---|---|---|---|
| REV | DESCRIPTION | DATE | APPROVED |
| A | REVISED RATING 54"X84" UNIT & ANCHORS | 11/28/12 | R.L. |

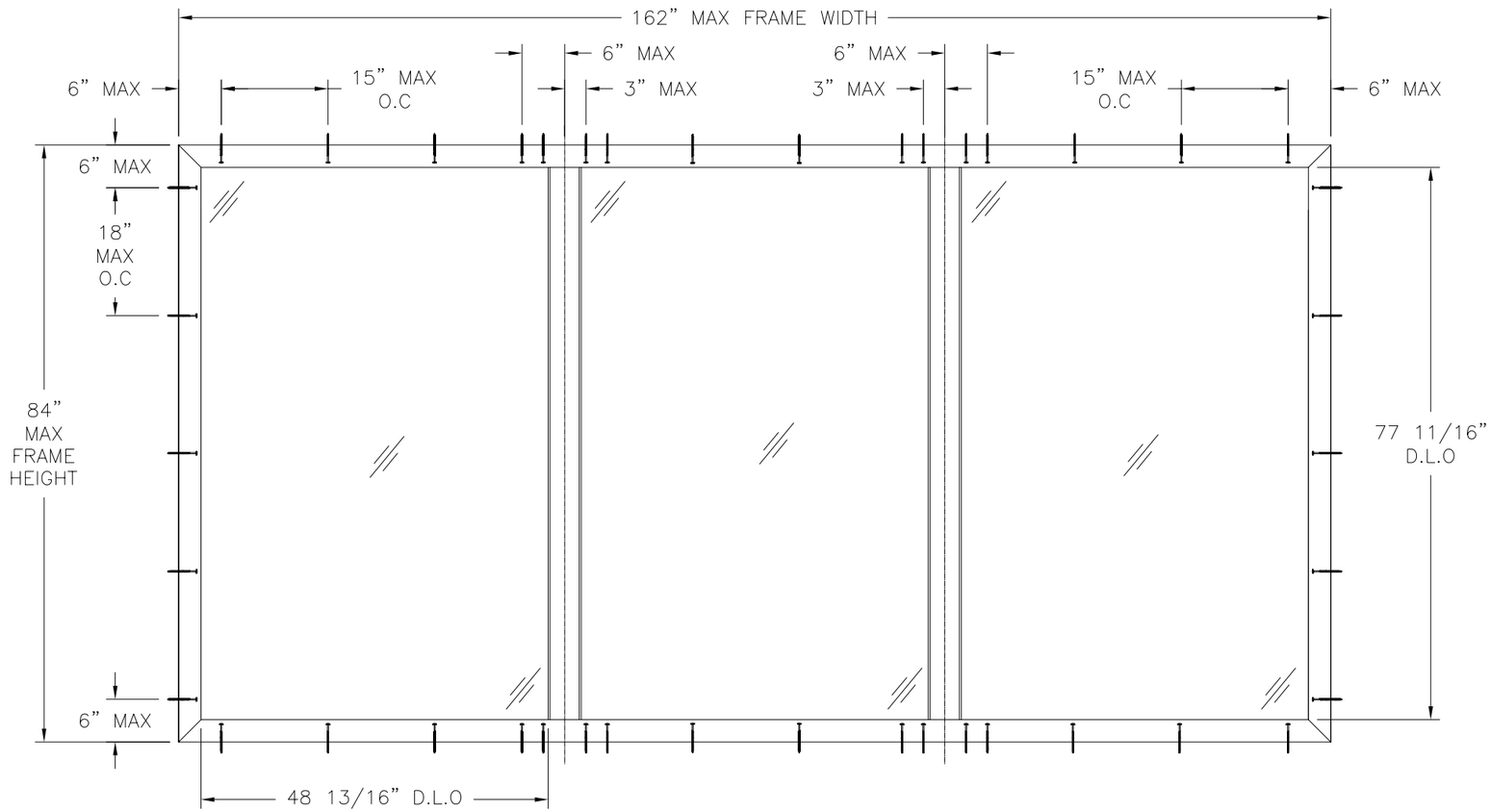


*V130 DIRECT SET VINYL FIXED WINDOW*

*TRIPLE UNIT*

*EXTERIOR VIEW*

| DESIGN PRESSURE RATING | IMPACT RATING |
|---|---|
| ±80.0PSF | NONE |

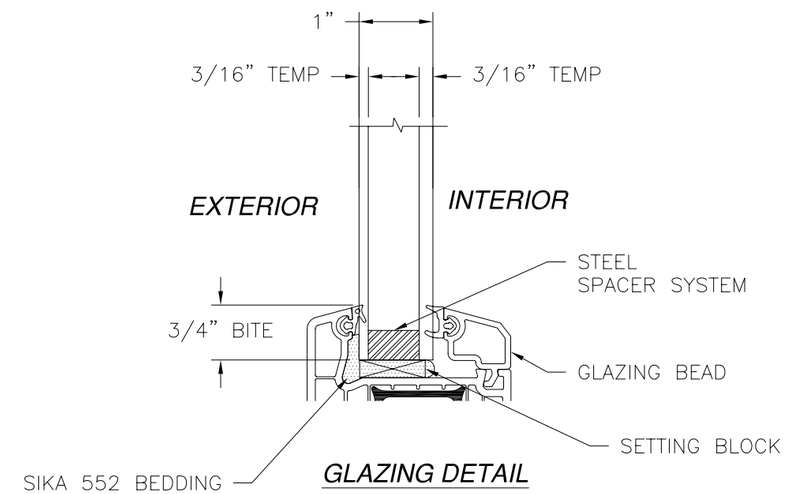


***GLAZING DETAIL***

*SIGNED: 11/28/2012*


WinDoor INCORPORATED

7500 AMSTERDAM DRIVE
ORLANDO, FL 32832
Phone: 407.481.8400
Fax: 407.481.0505
www.windoorinc.com


V130 VINYL FIXED WINDOW
SINGLE AND TRIPLE
TRIPLE. ELEVATION

| DRAWN: | DWG NO. | REV |
|---|---|---|
| V.L. | 08-01757 | A |
| SCALE NTS | DATE 08/24/12 | SHEET 2 OF 7 |

STATE OF TEXAS
LUIS R. LOMAS
101889
LICENSED
PROFESSIONAL ENGINEER


Luis R. Lomas P.E.
TX No.: 101889

| REVISIONS | | | |
|---|---|---|---|
| REV | DESCRIPTION | DATE | APPROVED |
| A | REVISED RATING 54"X84" UNIT & ANCHORS | 11/28/12 | R.L. |

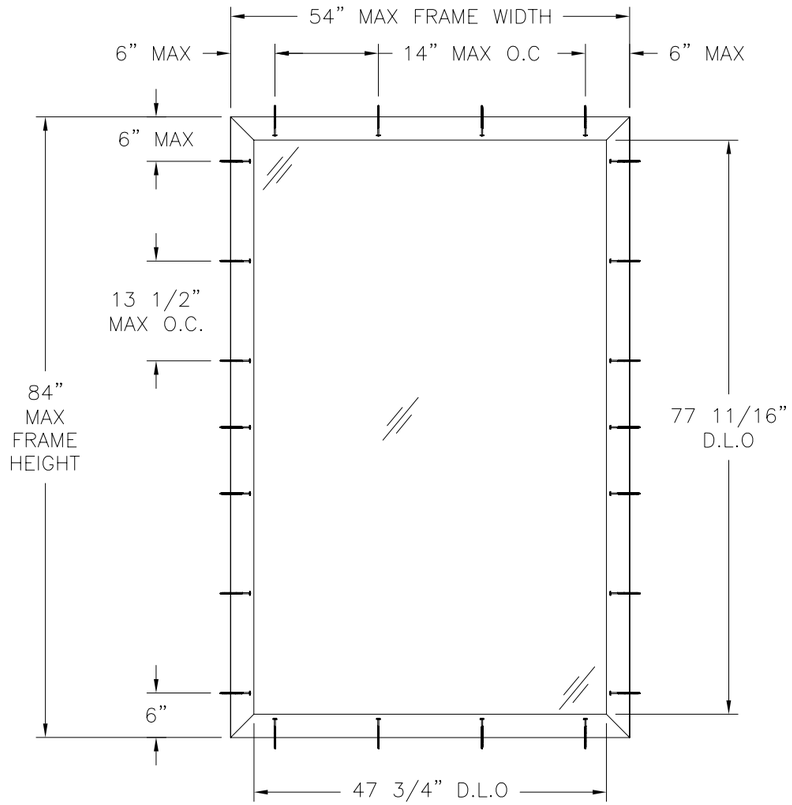


*V130 DIRECT SET VINYL FIXED WINDOW*
*EXTERIOR VIEW*

| DESIGN PRESSURE RATING | IMPACT RATING |
|---|---|
| +100.0/-120.0PSF | NONE |

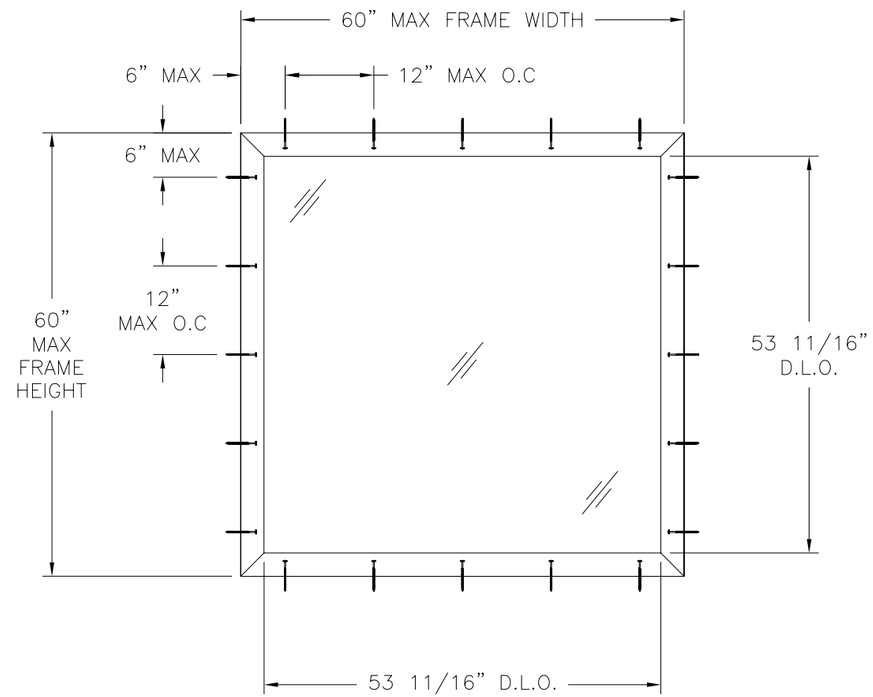


*V130 DIRECT SET VINYL FIXED WINDOW*
*EXTERIOR VIEW*

| DESIGN PRESSURE RATING | IMPACT RATING |
|---|---|
| ±100.0PSF | NONE |

*SIGNED: 11/28/2012*


WinDoor INCORPORATED
7500 AMSTERDAM DRIVE
ORLANDO, FL 32832
Phone: 407.481.8400
Fax: 407.481.0505
www.windoorinc.com


V130 VINYL FIXED WINDOW
SINGLE AND TRIPLE
SINGLE ELEVATIONS

| DRAWN: | DWG NO. | REV |
|---|---|---|
| V.L. | 08-01757 | A |
| SCALE NTS | DATE 08/24/12 | SHEET 3 OF 7 |

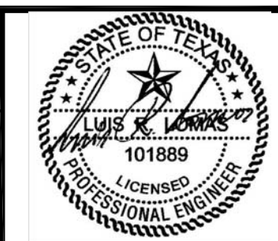


Luis R. Lomas P.E.
TX No.: 101889

| PARTS LIST | | | | |
|---|---|---|---|---|
| NO. | PART NUMBER | DESCRIPTION | MANUFACTURER | MATERIAL |
| 1 | 101.214 | FRAME | VEKA | RIGID PVC |
| 2 | 102.238 | 118MM T MULLION | VEKA | RIGID PVC |
| 3 | 107.200 | 1" GLAZING BEAD | VEKA | RIGID PVC |
| 4 | 107.203 | 1 1/4" GLAZING BEAD | VEKA | RIGID PVC |
| 5 | FH-06512 | FRAME REINFORCEMENT | KEYMARK | ALUMINUM 6005 T6 |
| 6 | 113.271.400.000PC | T MULLION REINFORCEMENT | VEKA | G90 GALV. STEEL |
| 7 | 112.050 | GLAZING GASKET | VEKA | DUROMETER 60 |
| 8 | 106.200.1 | CONNECTOR | VEKA | G90 GALV. STEEL |
| 9 | 112.253 | GLAZING GASKET | VEKA | DUROMETER 70 |
| 11 | 01-100-7755-002 | NEOPRENE SETTING BLOCK | FRANK LOWE | DUROMETER 80 |
| 12 | SIKA 552 | URETHANE SEALANT | | |
| 13 | | #10 X 3/4" FH SCREW | | STAINLESSS STEEL |

| REVISIONS | | | |
|---|---|---|---|
| REV | DESCRIPTION | DATE | APPROVED |
| A | REVISED RATING 54"X84" UNIT & ANCHORS | 11/28/12 | R.L. |

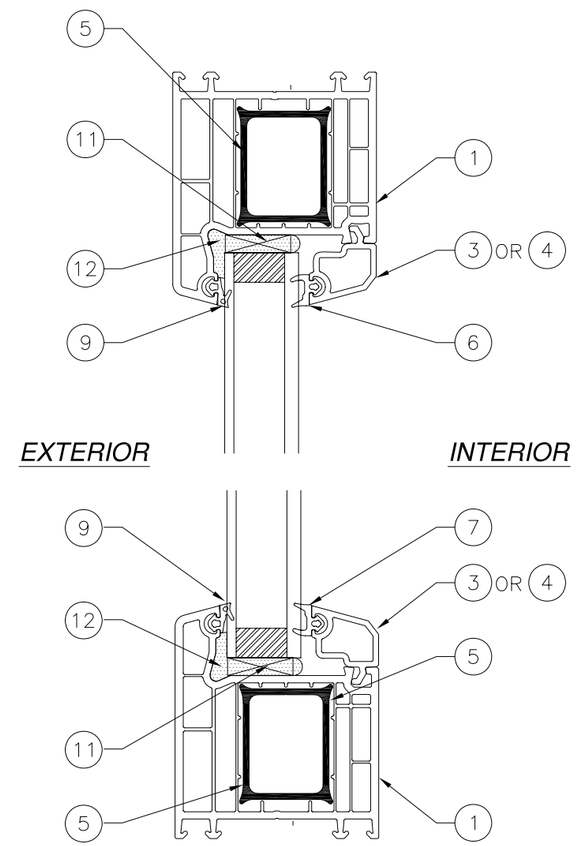


VERTICAL CROSS SECTION

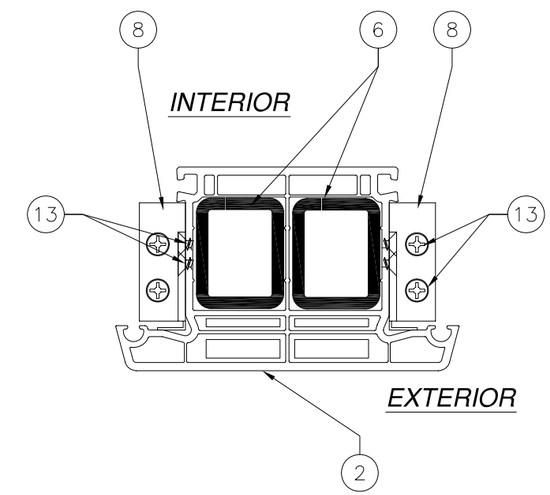


MULLION CONNECTOR DETAIL

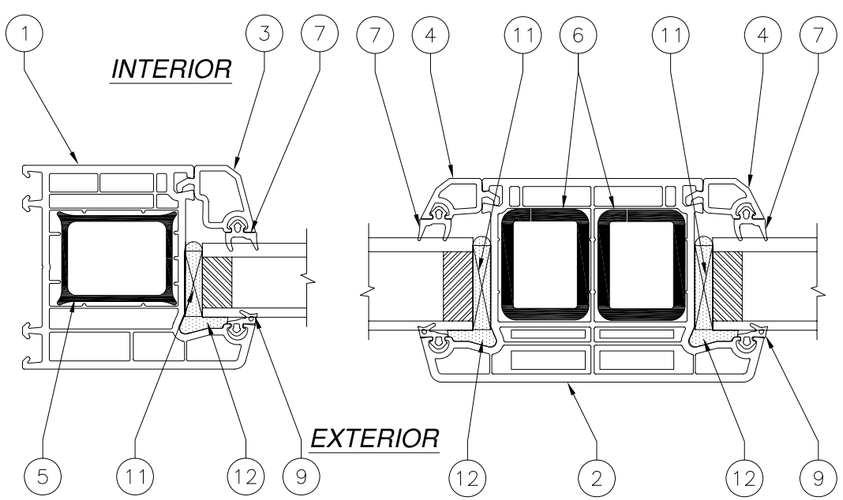


HORIZONTAL CROSS SECTION

SIGNED: 11/28/2012


WinDoor INCORPORATED
7500 AMSTERDAM DRIVE
ORLANDO, FL 32832
Phone: 407.481.8400
Fax: 407.481.0505
www.windoorinc.com


V130 VINYL FIXED WINDOW
SINGLE AND TRIPLE
B.O.M. AND CROSS SECTIONS

| DRAWN: | DWG NO. | REV |
|---|---|---|
| V.L. | 08-01757 | A |
| SCALE NTS | DATE 08/24/12 | SHEET 4 OF 7 |

STATE OF TEXAS
LUIS R. LOMAS
101889
LICENSED
PROFESSIONAL ENGINEER

Luis R. Lomas P.E.
TX No.: 101889

| REVISIONS | | | |
|---|---|---|---|
| REV | DESCRIPTION | DATE | APPROVED |
| A | REVISED RATING 54"X84" UNIT & ANCHORS | 11/28/12 | R.L. |

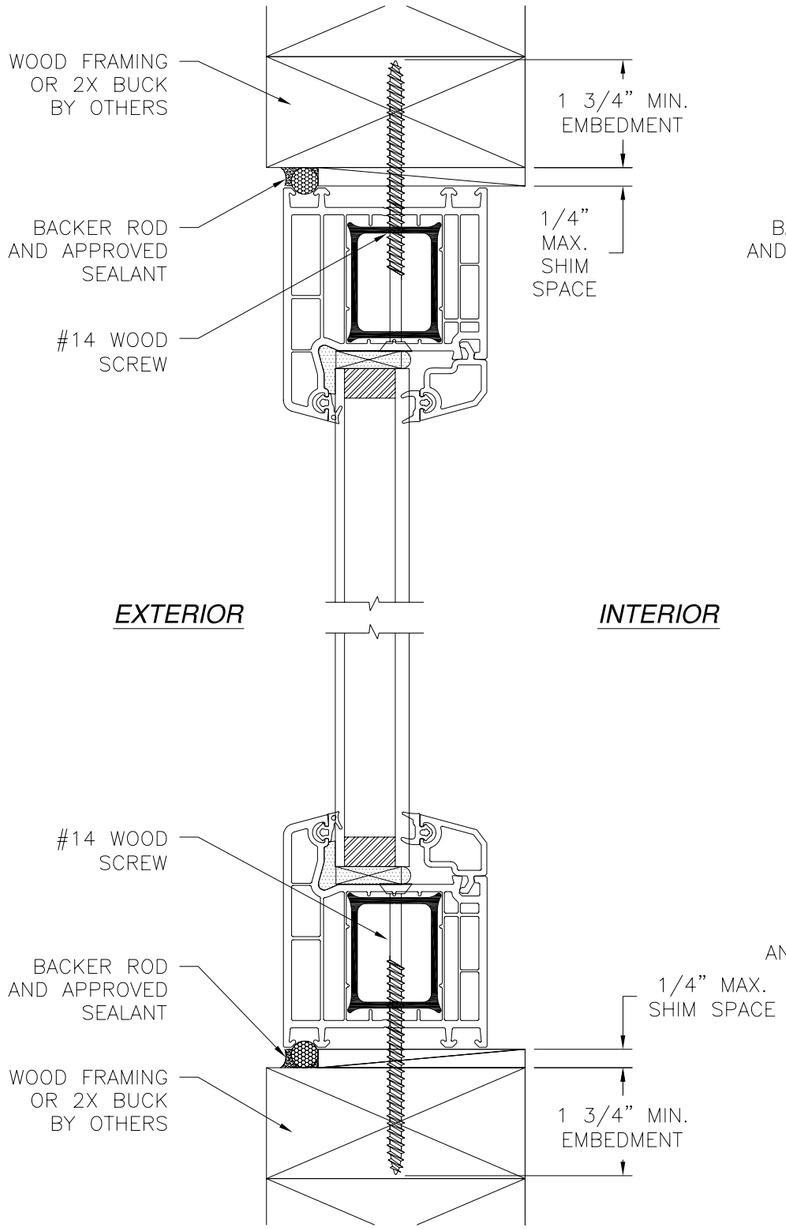


## VERTICAL CROSS SECTION

*WOOD FRAMING OR 2X BUCK INSTALLATION*
*HEAD AND SILL SHOWN, JAMBS SIMILAR*

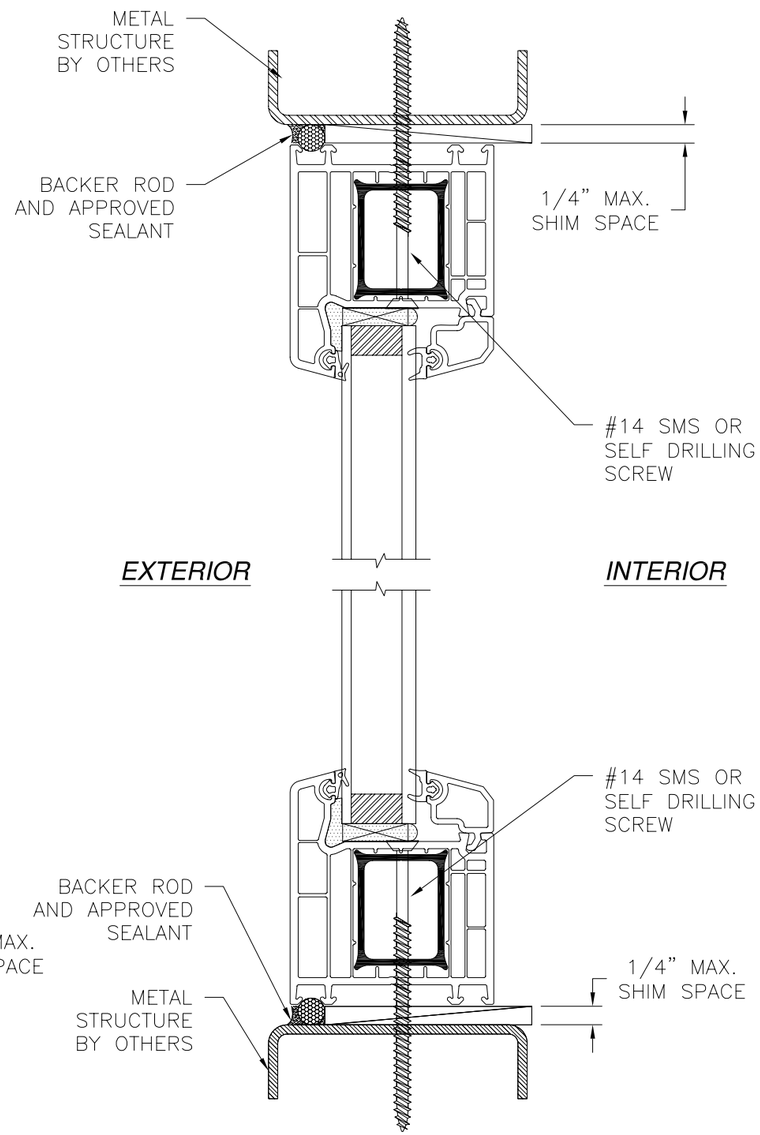


## VERTICAL CROSS SECTION

*METAL STRUCTURE INSTALLATION*
*HEAD AND SILL SHOWN, JAMBS SIMILAR*

NOTE: - SEALANT AND BACKER ROD MATERIAL AND JOINT DESIGN BY OTHERS.
- INTERIOR AND EXTERIOR FINISHES BY OTHERS OMITTED FOR CLARITY.

*SIGNED: 11/28/2012*


WinDoor INCORPORATED
7500 AMSTERDAM DRIVE
ORLANDO, FL 32832
Phone: 407.481.8400
Fax: 407.481.0505
www.windoorinc.com


V130 VINYL FIXED WINDOW
SINGLE AND TRIPLE
FRAME INSTALLATION DETAILS

| DRAWN: | DWG NO. | REV |
|---|---|---|
| V.L. | 08-01757 | A |
| SCALE NTS | DATE 08/24/12 | SHEET 5 OF 7 |

STATE OF TEXAS
LUIS R. LOMAS
101889
LICENSED
PROFESSIONAL ENGINEER

Luis R. Lomas P.E.
TX No.: 101889

| REVISIONS | | | |
|---|---|---|---|
| REV | DESCRIPTION | DATE | APPROVED |
| A | REVISED RATING 54"X84" UNIT & ANCHORS | 11/28/12 | R.L. |

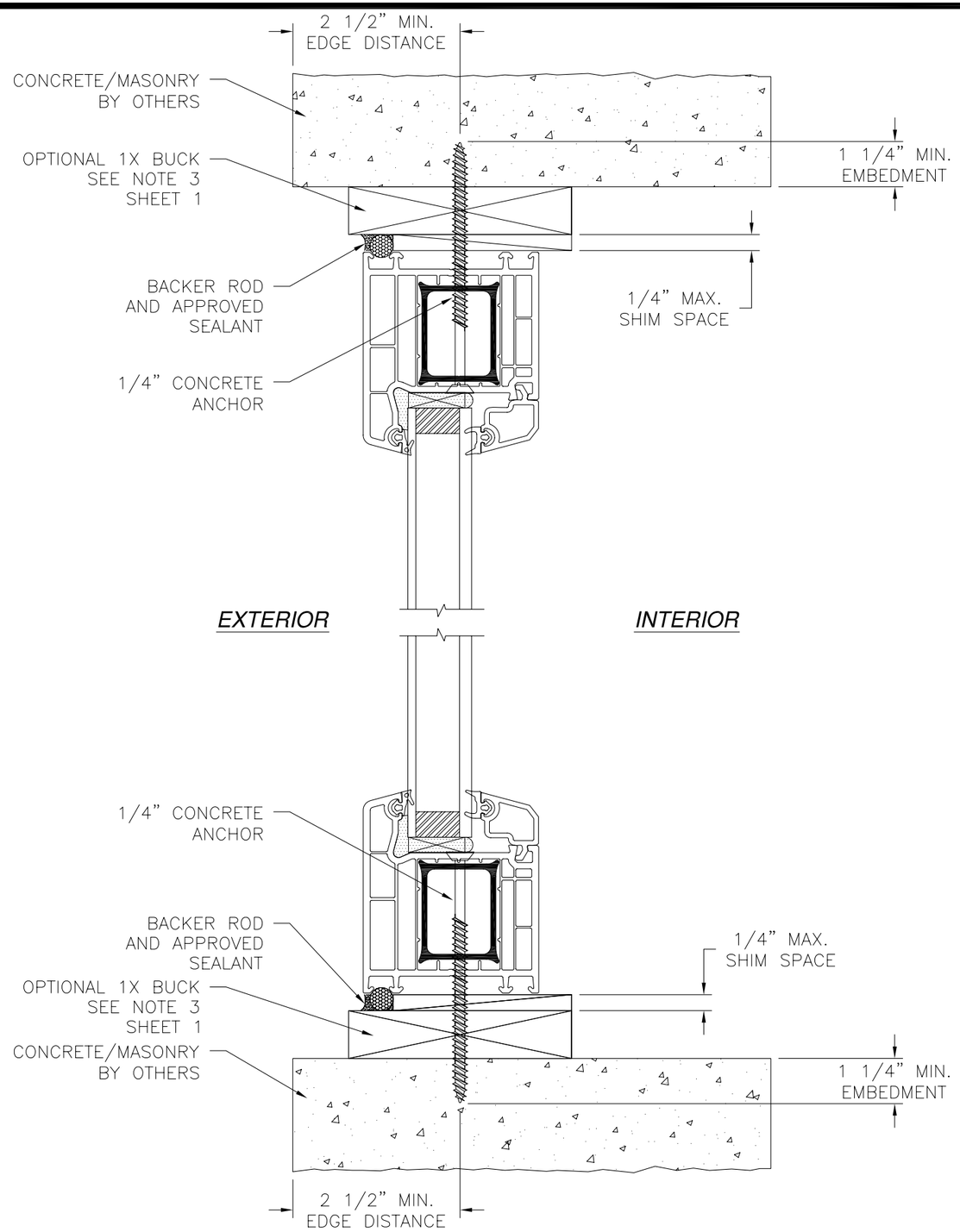


*VERTICAL CROSS SECTION*

*CONCRETE/MASONRY INSTALLATION*

*HEAD AND SILL SHOWN, JAMBS SIMILAR*

NOTE: - SEALANT AND BACKER ROD MATERIAL AND JOINT DESIGN BY OTHERS.
- INTERIOR AND EXTERIOR FINISHES BY OTHERS OMITTED FOR CLARITY.

*SIGNED: 11/28/2012*


WinDoor INCORPORATED
7500 AMSTERDAM DRIVE
ORLANDO, FL 32832
Phone: 407.481.8400
Fax: 407.481.0505
www.windoorinc.com


V130 VINYL FIXED WINDOW
SINGLE AND TRIPLE
FRAME INSTALLATION DETAILS

| DRAWN: | DWG NO. | REV |
|---|---|---|
| V.L. | 08-01757 | A |

| SCALE | DATE | SHEET |
|---|---|---|
| NTS | 08/24/12 | 6 OF 7 |

STATE OF TEXAS
LUIS R. LOMAS
101889
LICENSED
PROFESSIONAL ENGINEER

Luis R. Lomas P.E.
TX No.: 101889

| REVISIONS | | | |
|---|---|---|---|
| REV | DESCRIPTION | DATE | APPROVED |
| A | REVISED RATING 54"X84" UNIT & ANCHORS | 11/28/12 | R.L. |

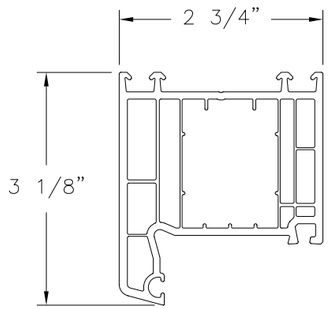


1 **FRAME**
RIGID PVC .110" THICK

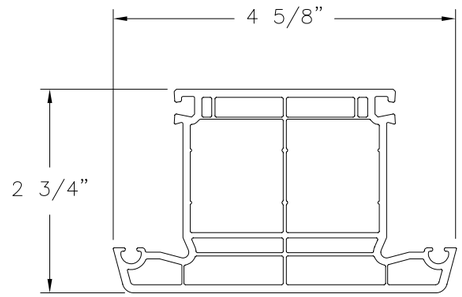


2 **T MULLION**
RIGID PVC .110" THICK

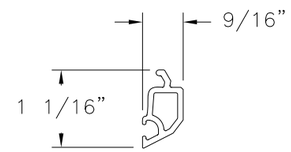


3 **GLAZING BEAD**
RIGID PVC .075" THICK

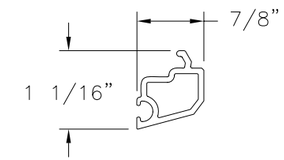


4 **GLAZING BEAD**
RIGID PVC .075" THICK

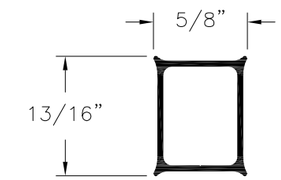


5 **REINFORCEMENT**
ALUMINUM 6005-T6 .080" THICK

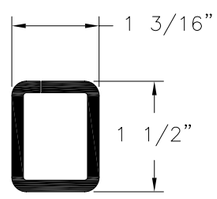


6 **REINFORCEMENT**
G90 GALVANIZED STEEL .157" THICK

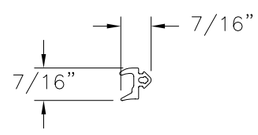


7 **GLAZING GASKET**
EPDM 60 DUROMETER

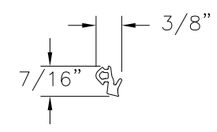


9 **GLAZING GASKET**
EPDM 70 DUROMETER

NOTE: - SEALANT AND BACKER ROD MATERIAL AND JOINT DESIGN BY OTHERS.
- INTERIOR AND EXTERIOR FINISHES BY OTHERS OMITTED FOR CLARITY.

SIGNED: 11/28/2012


WinDoor INCORPORATED
7500 AMSTERDAM DRIVE
ORLANDO, FL 32832
Phone: 407.481.8400
Fax: 407.481.0505
www.windoorinc.com


V130 VINYL FIXED WINDOW
SINGLE AND TRIPLE
COMPONENTS

| DRAWN: | DWG NO. | REV |
|---|---|---|
| V.L. | 08-01757 | A |
| SCALE NTS | DATE 08/24/12 | SHEET 7 OF 7 |

STATE OF TEXAS
LUIS R. LOMAS
101889
LICENSED
PROFESSIONAL ENGINEER

Luis R. Lomas P.E.
TX No.: 101889