REVISIONS			
REV	DESCRIPTION	DATE	APPROVED
A	REVISED COMPLIANCE	02/18/16	R.L.

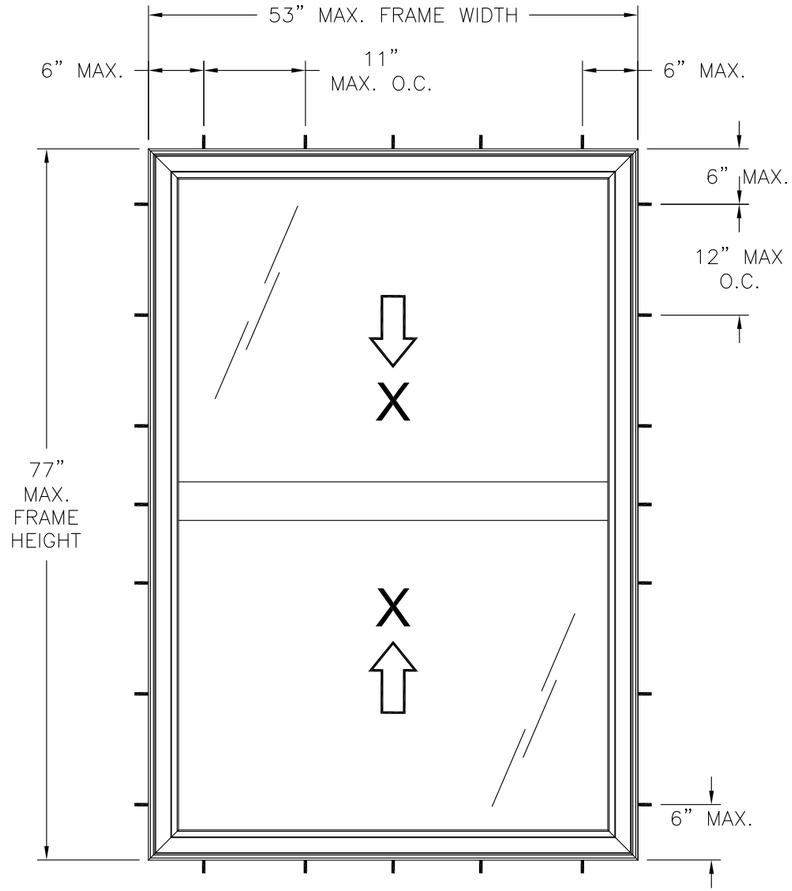

SERIES 6312 VINYL DOUBLE HUNG WINDOW

EXTERIOR VIEW

DESIGN PRESSURE RATING	*IMPACT RATING*
+45.0/-50.0	*LARGE AND SMALL MISSILE IMPACT*

MISSILE LEVEL D, WIND ZONE 4

NOTES:

1. THE PRODUCT SHOWN HEREIN IS DESIGNED AND MANUFACTURED TO COMPLY WITH REQUIREMENTS OF THE 2006 IBC AND 2006 IRC WITH STATE OF TEXAS MODIFICATIONS AND THE 2009 IBC, 2009 IRC, 2012 IBC AND 2012 IRC.
2. WOOD FRAMING AND MASONRY OPENING TO BE DESIGNED AND ANCHORED TO PROPERLY TRANSFER ALL LOADS TO STRUCTURE. FRAMING AND MASONRY OPENING IS THE RESPONSIBILITY OF THE ARCHITECT OR ENGINEER OF RECORD.
3. 1X BUCK OVER MASONRY/CONCRETE IS OPTIONAL. WHERE 1X BUCK IS NOT USED DISSIMILAR MATERIALS MUST BE SEPARATED WITH APPROVED COATING OR MEMBRANE. SELECTION OF COATING OR MEMBRANE IS THE RESPONSIBILITY OF THE ARCHITECT OR ENGINEER OF RECORD.
4. ALLOWABLE STRESS INCREASE OF 1/3 WAS NOT USED IN THE DESIGN OF THE PRODUCT SHOWN HEREIN. WIND LOAD DURATION FACTOR Cd=1.6 WAS USED FOR WOOD ANCHOR CALCULATIONS.
5. FRAME MATERIAL: EXTRUDED RIGID PVC.
6. UNITS MUST BE GLAZED PER ASTM E1300–04, SEE SHEET 1 FOR GLASS DETAILS
7. APPROVED IMPACT PROTECTIVE SYSTEM <u>IS NOT REQUIRED</u> FOR THIS PRODUCT IN WIND BORNE DEBRIS REGIONS.
8. SHIM AS REQUIRED AT EACH INSTALLATION ANCHOR WITH LOAD BEARING SHIM. SHIM WHERE SPACE OF 1/16" OR GREATER OCCURS. MAXIMUM ALLOWABLE SHIM STACK TO BE 1/4".
9. FOR ANCHORING INTO WOOD FRAMING OR 2X BUCK USE #10 WOOD SCREWS WITH SUFFICIENT LENGTH TO ACHIEVE A 1 3/8" MINIMUM EMBEDMENT INTO SUBSTRATE. LOCATE ANCHORS AS SHOWN IN ELEVATIONS AND INSTALLATION DETAILS.
10. FOR ANCHORING INTO MASONRY/CONCRETE USE 3/16" TAPCONS WITH SUFFICIENT LENGTH TO ACHIEVE A 1 1/4" MINIMUM EMBEDMENT INTO SUBSTRATE WITH 2 1/2'' MINIMUM EDGE DISTANCE. LOCATE ANCHORS AS SHOWN IN ELEVATIONS AND INSTALLATION DETAILS.
11. FOR ANCHORING INTO METAL STRUCTURE USE #10 SMS OR SELF DRILLING SCREWS WITH SUFFICIENT LENGTH TO ACHIEVE 3 THREADS MINIMUM BEYOND STRUCTURE INTERIOR WALL. LOCATE ANCHORS AS SHOWN IN ELEVATIONS AND INSTALLATION DETAILS.
12. ALL FASTENERS TO BE CORROSION RESISTANT.
13. INSTALLATION ANCHORS SHALL BE INSTALLED IN ACCORDANCE WITH ANCHOR MANUFACTURER'S INSTALLATION INSTRUCTIONS AND ANCHORS SHALL NOT BE USED IN SUBSTRATES WITH STRENGTHS LESS THAN THE MINIMUM STRENGTH SPECIFIED BELOW:
    A. WOOD – MINIMUM SPECIFIC GRAVITY OF G=0.42
    B. CONCRETE – MINIMUM COMPRESSIVE STRENGTH OF 3,192 PSI.
    C. MASONRY – STRENGTH CONFORMANCE TO ASTM C–90, GRADE N, TYPE 1 (OR GREATER).
    D. METAL STRUCTURE: STEEL 18GA, 33KSI OR ALUMINUM 6063–T5 1/8" THICK MINIMUM

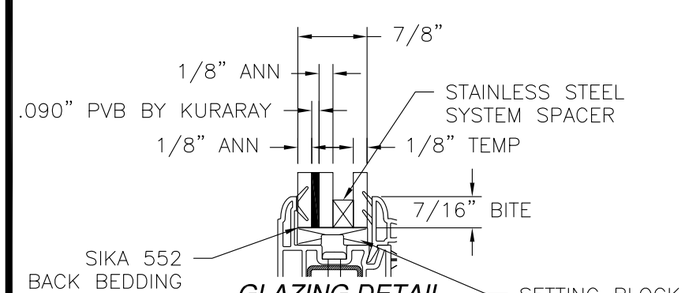

GLAZING DETAIL

SIGNED: 02/18/2016

TABLE OF CONTENTS	
SHEET NO.	DESCRIPTION
1	ELEVATION, ANCHORING AND NOTES
2	CROSS SECTIONS AND B.O.M.
3 – 4	INSTALLATION DETAILS

REGENCY PLUS, INC.
2000 LOCUST GAP HIGHWAY
MT CARMEL, PA 17851

SERIES 6312 VINYL DOUBLE HUNG WINDOW
53" x 77"
ELEVATION AND NOTES

DRAWN:	DWG NO.	REV
V.L.	08–01714	A
SCALE NTS	DATE 09/17/12	SHEET 1 OF 3

Luis R. Lomas P.E.
TX No.: 101889

REVISIONS			
REV	DESCRIPTION	DATE	APPROVED
A	REVISED COMPLIANCE	02/18/16	R.L.

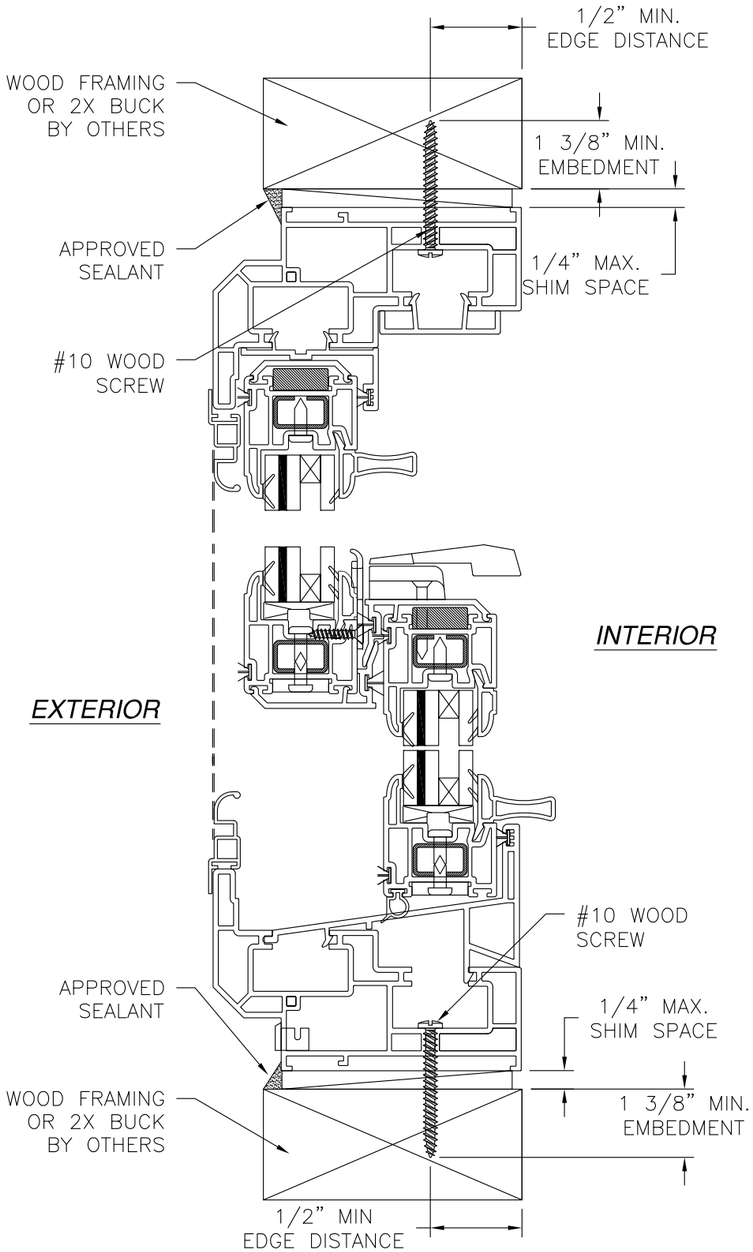

VERTICAL CROSS SECTION

WOOD FRAMING OR 2X BUCK INSTALLATION

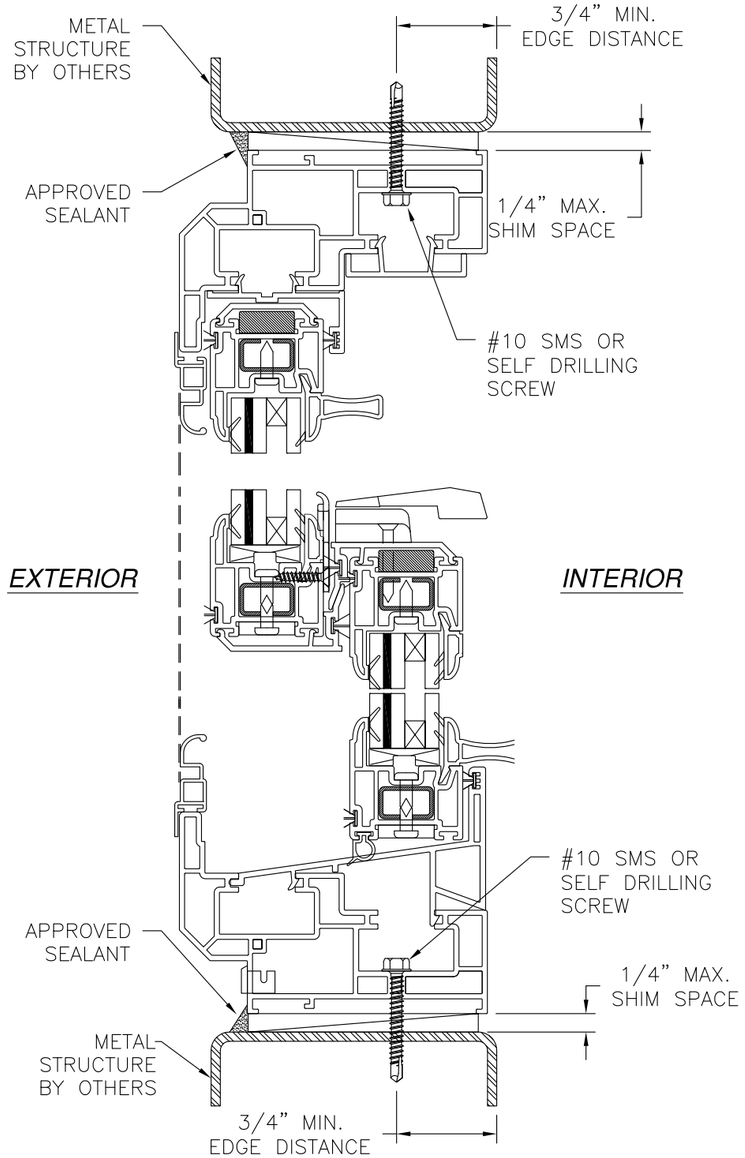

VERTICAL CROSS SECTION

METAL STRUCTURE INSTALLATION

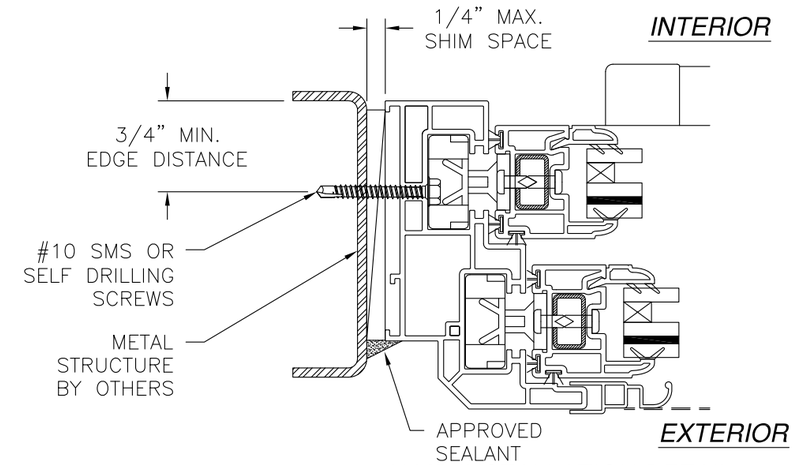

JAMB INSTALLATION DETAIL

METAL STRUCTURE INSTALLATION

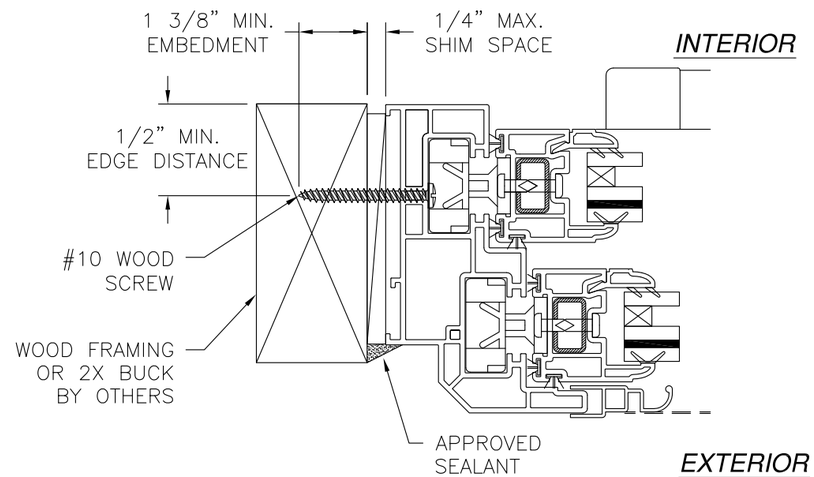

JAMB INSTALLATION DETAIL

WOOD FRAMING OR 2X BUCK INSTALLATION

SIGNED: 02/18/2016

NOTES:

1. *INTERIOR AND EXTERIOR FINISHES, BY OTHERS, NOT SHOWN FOR CLARITY.*
2. *PERIMETER AND JOINT SEALANT BY OTHERS TO BE DESIGNED IN ACCORDANCE WITH ASTM E2112*

REGENCY PLUS, INC.
2000 LOCUST GAP HIGHWAY
MT CARMEL, PA 17851

SERIES 6312 VINYL DOUBLE HUNG WINDOW
53" x 77"
INSTALLATION DETAILS

DRAWN:	DWG NO.	REV
V.L.	08-01714	A
SCALE NTS	DATE 09/17/12	SHEET 2 OF 3

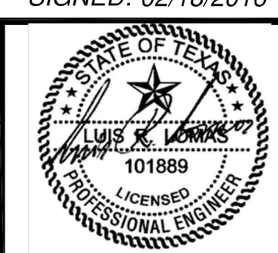

Luis R. Lomas P.E.
TX No.: 101889

REVISIONS			
REV	DESCRIPTION	DATE	APPROVED
A	REVISED COMPLIANCE	02/18/16	R.L.

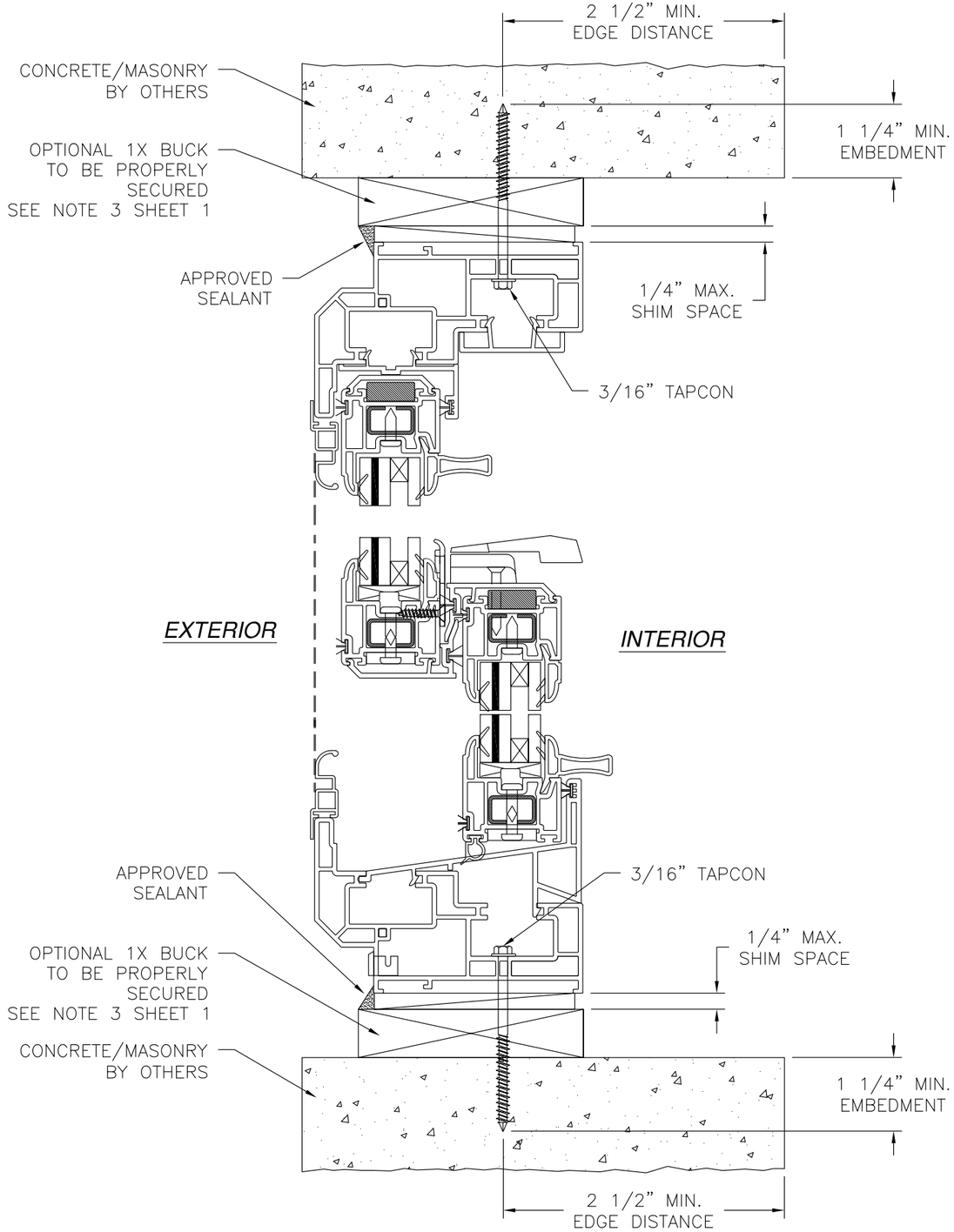

VERTICAL CROSS SECTION

CONCRETE/MASONRY INSTALLATION

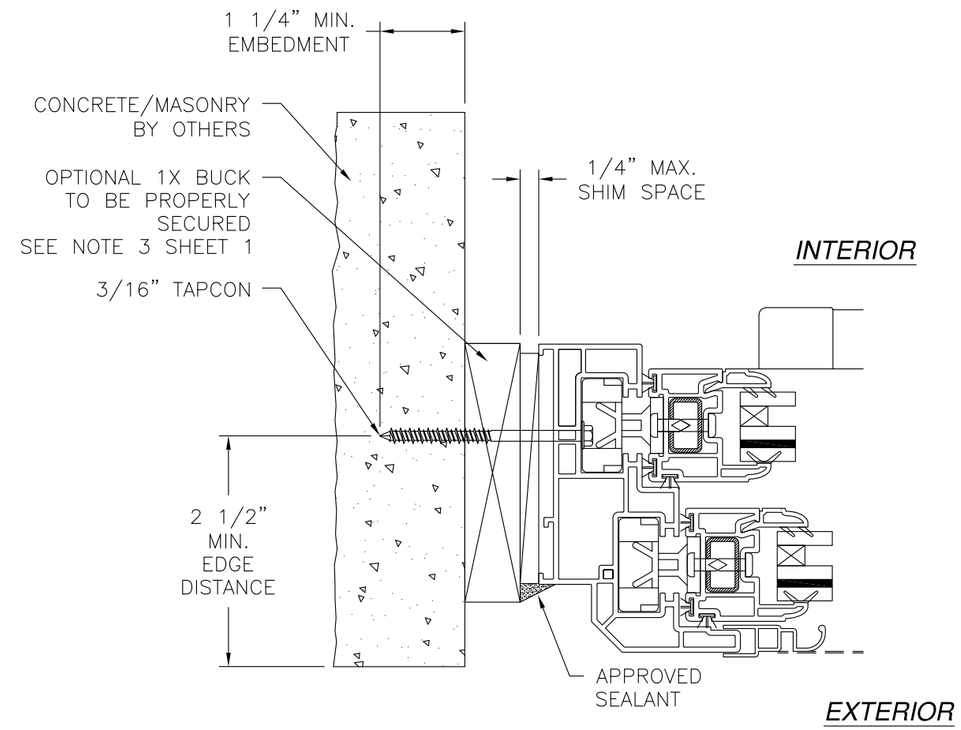

JAMB INSTALLATION DETAIL

CONCRETE/MASONRY INSTALLATION

NOTES:

1. *INTERIOR AND EXTERIOR FINISHES, BY OTHERS, NOT SHOWN FOR CLARITY.*
2. *PERIMETER AND JOINT SEALANT BY OTHERS TO BE DESIGNED IN ACCORDANCE WITH ASTM E2112*

SIGNED: 02/18/2016

REGENCY PLUS, INC.
2000 LOCUST GAP HIGHWAY
MT CARMEL, PA 17851

SERIES 6312 VINYL DOUBLE HUNG WINDOW
53" x 77"
INSTALLATION DETAILS

DRAWN:	DWG NO.	REV
V.L.	08-01714	A
SCALE NTS	DATE 09/17/12	SHEET 3 OF 3

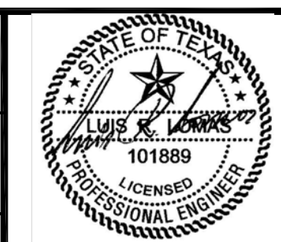

Luis R. Lomas P.E.
TX No.: 101889