REVISIONS			
REV	DESCRIPTION	DATE	APPROVED
A	REMOVED CHSRTS	09/12/12	R.L.

NOTES:

1. THE PRODUCT SHOWN HEREIN IS DESIGNED AND MANUFACTURED TO COMPLY WITH REQUIREMENTS OF THE INTERNATIONAL BUILDING CODE THE RESIDENTIAL BUILDING CODE WITH STATE OF TEXAS MODIFICATIONS.
2. WOOD FRAMING AND MASONRY OPENING TO BE DESIGNED AND ANCHORED TO PROPERLY TRANSFER ALL LOADS TO STRUCTURE. FRAMING AND MASONRY OPENING IS THE RESPONSIBILITY OF THE ARCHITECT OR ENGINEER OF RECORD.
3. 1X BUCK OVER MASONRY/CONCRETE IS OPTIONAL. WHERE 1X BUCK IS NOT USED DISSIMILAR MATERIALS MUST BE SEPARATED WITH APPROVED COATING OR MEMBRANE. SELECTION OF COATING OR MEMBRANE IS THE RESPONSIBILITY OF THE ARCHITECT OR ENGINEER OF RECORD.
4. ALLOWABLE STRESS INCREASE OF 1/3 WAS NOT USED IN THE DESIGN OF THE PRODUCT SHOWN HEREIN. WIND LOAD DURATION FACTOR Cd=1.6 WAS USED FOR WOOD ANCHOR CALCULATIONS.
5. FRAME MATERIAL: ALUMINUM 6063–T6.
6. UNITS MUST BE GLAZED PER ASTM E1300–04, SEE SHEET 6 FOR GLASS OPTIONS.
7. APPROVED IMPACT PROTECTIVE SYSTEM <u>IS REQUIRED</u> FOR THIS PRODUCT IN WIND BORNE DEBRIS REGIONS.
8. SHIM AS REQUIRED AT EACH INSTALLATION ANCHOR WITH LOAD BEARING SHIM. SHIM WHERE SPACE OF 1/16" OR GREATER OCCURS. MAXIMUM ALLOWABLE SHIM STACK TO BE 1/4".
9. FOR ANCHORING INTO WOOD FRAMING OR 2X BUCK USE #12 WOOD SCREWS WITH SUFFICIENT LENGTH TO ACHIEVE A 1 5/8" MINIMUM EMBEDMENT INTO SUBSTRATE. LOCATE ANCHORS AS SHOWN IN ELEVATIONS AND INSTALLATION DETAILS.
10. FOR ANCHORING INTO MASONRY/CONCRETE USE 1/4" TAPCONS WITH SUFFICIENT LENGTH TO ACHIEVE A 1 1/4" MINIMUM EMBEDMENT INTO SUBSTRATE WITH 2 1/2'' MINIMUM EDGE DISTANCE. LOCATE ANCHORS AS SHOWN IN ELEVATIONS AND INSTALLATION DETAILS.
11. FOR ANCHORING INTO METAL STRUCTURE USE #12 SMS OR SELF DRILLING SCREWS WITH SUFFICIENT LENGTH TO ACHIEVE 3 THREADS MINIMUM BEYOND STRUCTURE INTERIOR WALL. LOCATE ANCHORS AS SHOWN IN ELEVATIONS AND INSTALLATION DETAILS.
12. ALL FASTENERS TO BE CORROSION RESISTANT.
13. INSTALLATION ANCHORS SHALL BE INSTALLED IN ACCORDANCE WITH ANCHOR MANUFACTURER'S INSTALLATION INSTRUCTIONS AND ANCHORS SHALL NOT BE USED IN SUBSTRATES WITH STRENGTHS LESS THAN THE MINIMUM STRENGTH SPECIFIED BELOW:
    A. WOOD – MINIMUM SPECIFIC GRAVITY OF G=0.42
    B. CONCRETE – MINIMUM COMPRESSIVE STRENGTH OF 3,192 PSI.
    C. MASONRY – STRENGTH CONFORMANCE TO ASTM C–90, GRADE N, TYPE 1 (OR GREATER).
    D. METAL STRUCTURE: STEEL 18GA, 33KSI OR ALUMINUM 6063–T5 1/8" THICK MINIMUM

SIGNED: 09/13/2012

TABLE OF CONTENTS

SHEET NO.	DESCRIPTION
1	NOTES
2 – 3	ELEVATIONS
4	CROSS SECTIONS AND B.O.M.
5 – 6	INSTALLATION DETAILS
7	COMPONENTS

WinDoor INCORPORATED
7500 AMSTERDAM DRIVE
ORLANDO, FL 32832
Phone: 407.481.8400
Fax: 407.481.0505
www.windoorinc.com

9020 PICTURE WINDOW
NON IMPACT
NOTES

DRAWN:	DWG NO.	REV
V.L.	08–01654	A

SCALE NTS | DATE 06/27/2012 | SHEET 1 OF 7

STATE OF TEXAS
LUIS R. LOMAS
101889
LICENSED
PROFESSIONAL ENGINEER

Luis R. Lomas P.E.
TX No.: 101889

REVISIONS			
REV	DESCRIPTION	DATE	APPROVED
A	REMOVED CHSRTS	09/12/12	R.L.

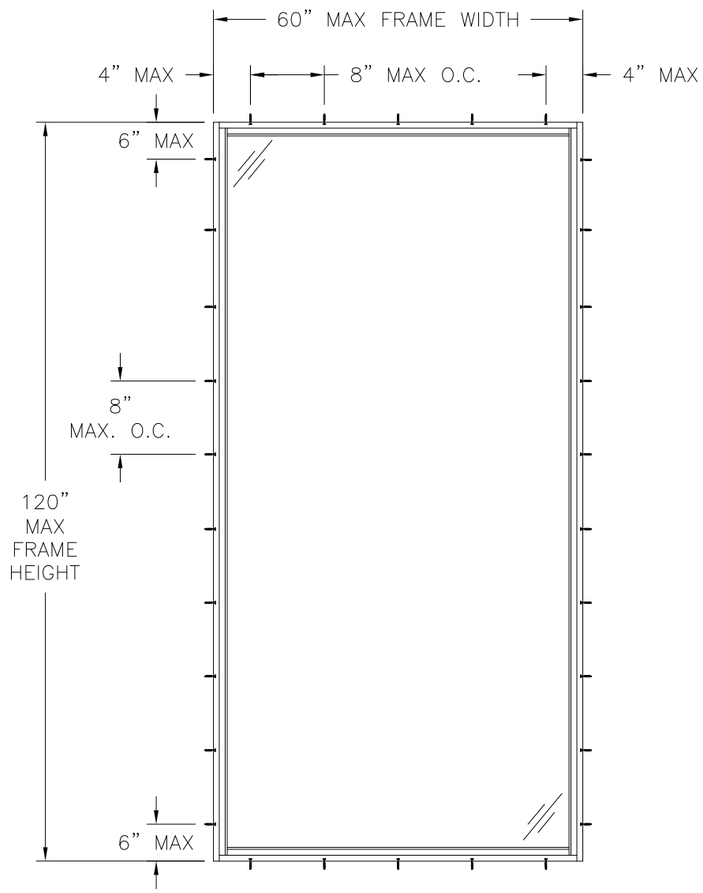

9020 PICTURE WINDOW
EXTERIOR VIEW

DESIGN PRESSURE RATING	IMPACT RATING
±95.0PSF	NONE

WITH GLAZING A

DESIGN PRESSURE RATING	IMPACT RATING
±150.0PSF	NONE

WITH GLAZING B & C

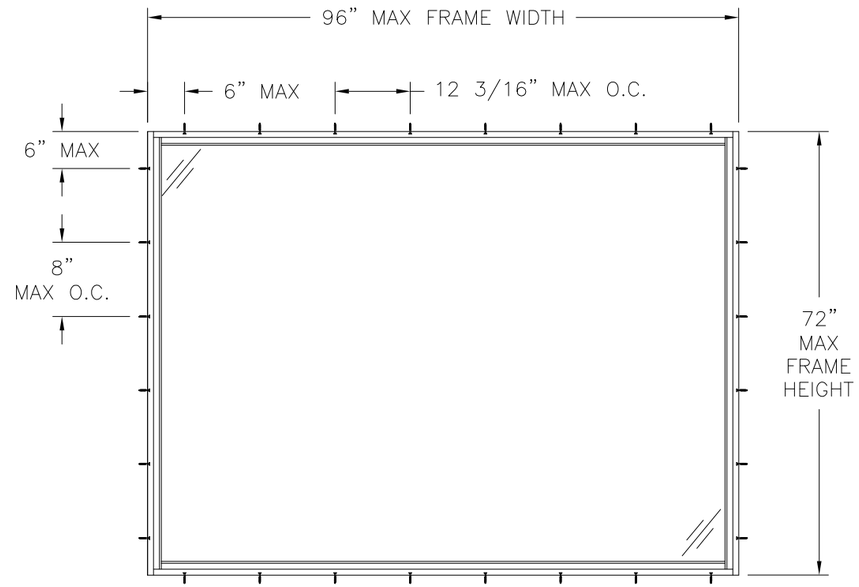

9020 PICTURE WINDOW
EXTERIOR VIEW

DESIGN PRESSURE RATING	IMPACT RATING
±110.0PSF	NONE

WITH GLAZING A

DESIGN PRESSURE RATING	IMPACT RATING
±150.0PSF	NONE

WITH GLAZING B & C

SIGNED: 09/12/2012

WinDoor INCORPORATED
7500 AMSTERDAM DRIVE
ORLANDO, FL 32832
Phone: 407.481.8400
Fax: 407.481.0505
www.windoorinc.com

9020 PICTURE WINDOW
NON IMPACT
ELEVATIONS

DRAWN:	DWG NO.	REV
V.L.	08-01654	A

SCALE	DATE	SHEET
NTS	06/27/2012	2 OF 7

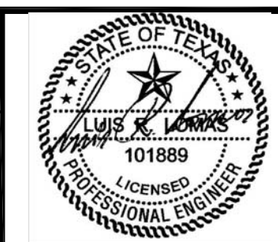

Luis R. Lomas P.E.
TX No.: 101889

REVISIONS			
REV	DESCRIPTION	DATE	APPROVED
A	REMOVED CHSRTS	09/12/12	R.L.

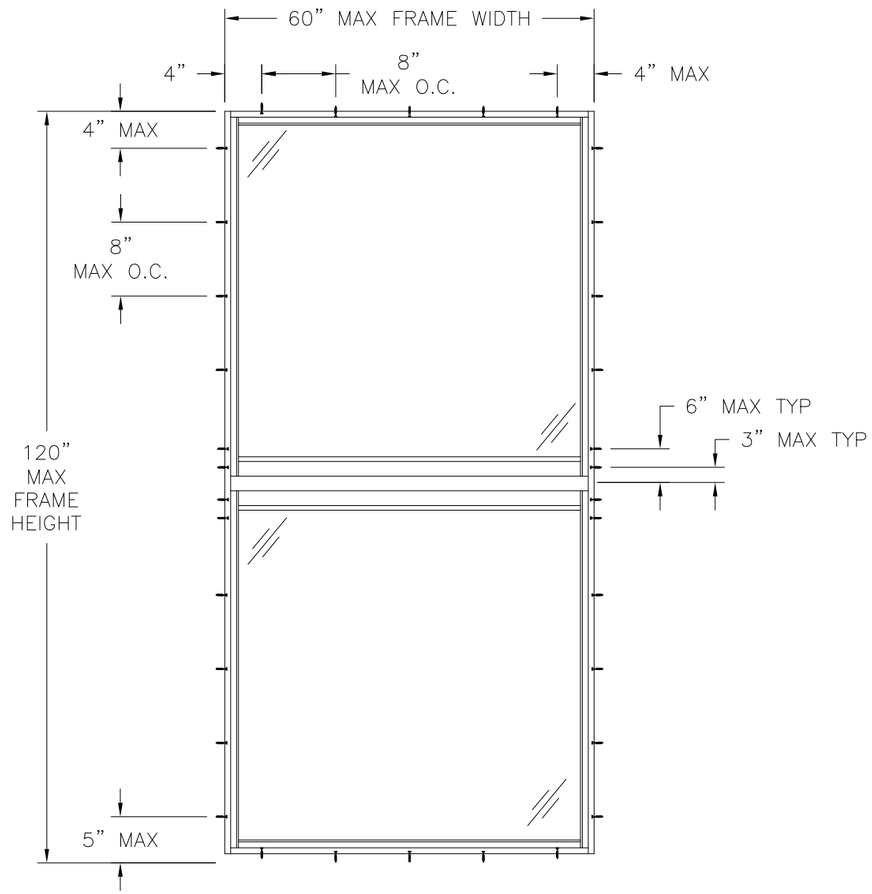

9020 PICTURE WINDOW

EXTERIOR VIEW

DESIGN PRESSURE RATING	IMPACT RATING
±85.0PSF	NONE

FOR AW RATINGS WITH GLAZING A

DESIGN PRESSURE RATING	IMPACT RATING
±95.0PSF	NONE

FOR LC RATINGS WITH GLAZING A

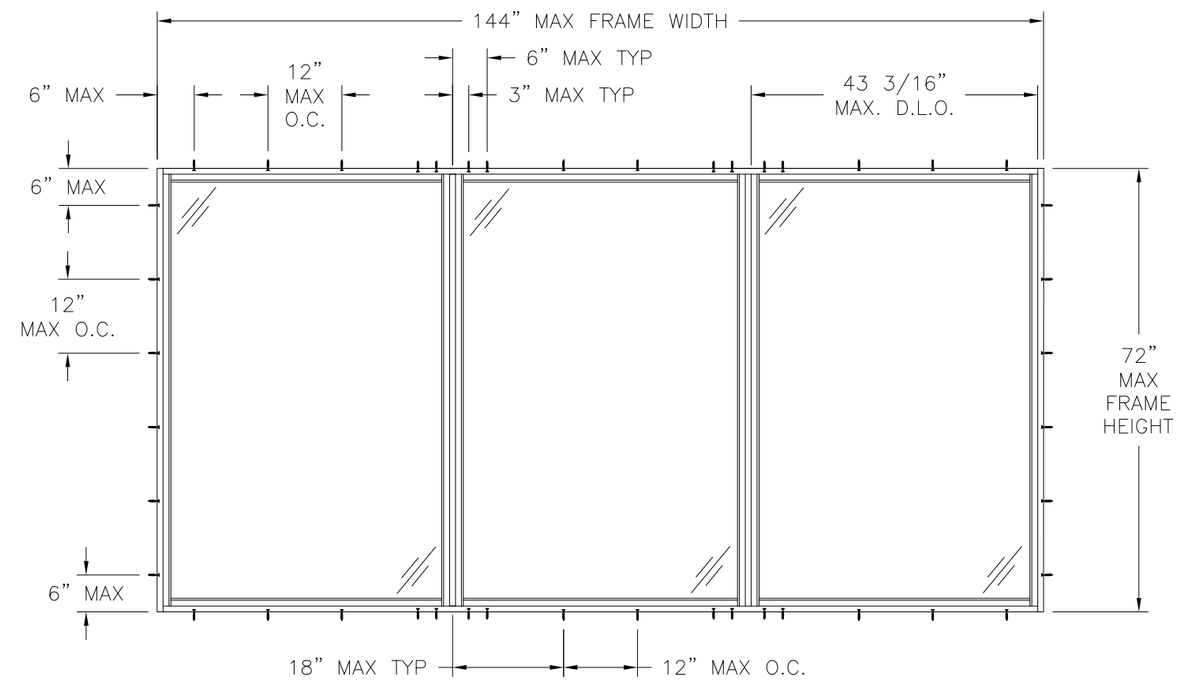

9020 TRIPLE PICTURE WINDOW

EXTERIOR VIEW

DESIGN PRESSURE RATING	IMPACT RATING
+70.0/-75.0PSF	NONE

WITH GLAZING A , B & C

SIGNED: 09/12/2012

WinDoor INCORPORATED
7500 AMSTERDAM DRIVE
ORLANDO, FL 32832
Phone: 407.481.8400
Fax: 407.481.0505
www.windoorinc.com

9020 PICTURE WINDOW
NON IMPACT
ELEVATIONS

DRAWN:	DWG NO.	REV
V.L.	08-01654	A

SCALE	DATE	SHEET
NTS	06/27/2012	3 OF 7

STATE OF TEXAS
LUIS R. LOMAS
101889
LICENSED
PROFESSIONAL ENGINEER

Luis R. Lomas P.E.
TX No.: 101889

PARTS LIST				
NO.	PART NUMBER	DESCRIPTION	MANUFACTURER	MATERIAL
1	S-9020A1-WDI	FRAME HEAD AND SILL ASSEMBLY	KEYMARK	ALUMINUM 6063-T6
2	S-9020A2-WDI	FRAME JAMB ASSEMBLY	KEYMARK	ALUMINUM 6063-T6
3	S-9020A3-WDI	MULL ASSEMBLY	KEYMARK	ALUMINUM 6063-T6
4	FH-06559	MULL INTERIOR REINFORCEMENT	KEYMARK	ALUMINUM 6063-T6
5	FS-06558	MULL EXTERIOR REINFORCEMENT	KEYMARK	ALUMINUM 6063-T6
6	S-49328	SCREW COVER	KEYMARK	ALUMINUM 6063-T6
7	S-49330	FLUSH ADAPTOR	KEYMARK	ALUMINUM 6063-T6
8	S-46082	1/4" GLASS STOP	KEYMARK	ALUMINUM 6063-T6
9	S-46084	1" GLASS STOP	KEYMARK	ALUMINUM 6063-T6
10	S-46083	1 3/8" GLASS STOP	KEYMARK	ALUMINUM 6063-T6
11	GSVN-07A	GLAZING VINYL		
12	131014	#8x1" SCREW		STAINLESS STEEL
13		#8x1 3/4" SCREW		STAINLESS STEEL
14		#12x1" SCREW		STAINLESS STEEL
15	121000-12100E1	SETTING BLOCK		RUBBER
16	SIKA 552	URETHANE SEALANT		

REVISIONS			
REV	DESCRIPTION	DATE	APPROVED
A	REMOVED CHSRTS	09/12/12	R.L.

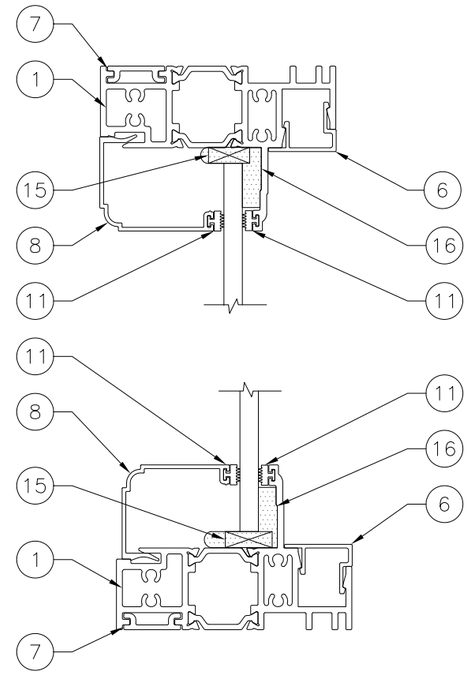

VERTICAL SECTION

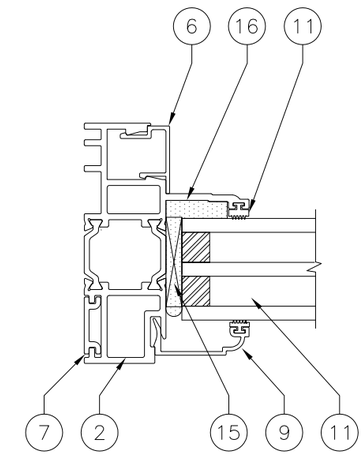

HORIZONTAL SECTION

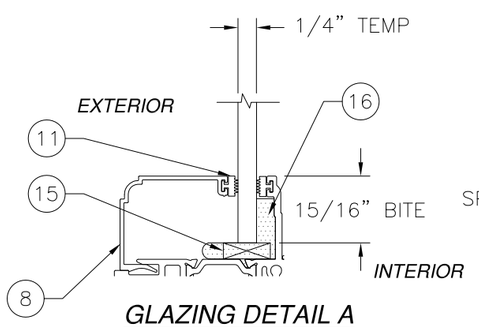

GLAZING DETAIL A

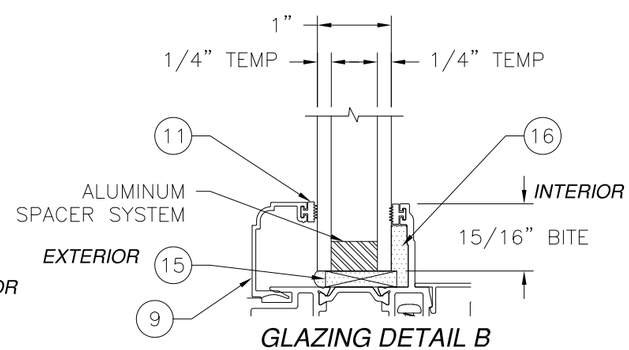

GLAZING DETAIL B

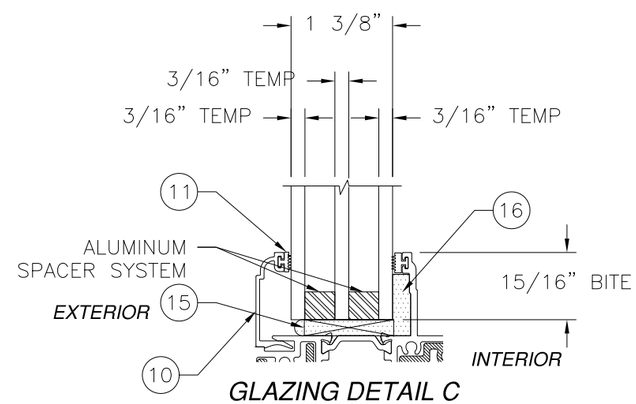

GLAZING DETAIL C

SIGNED: 09/12/2012

WinDoor INCORPORATED
7500 AMSTERDAM DRIVE
ORLANDO, FL 32832
Phone: 407.481.8400
Fax: 407.481.0505
www.windoorinc.com

9020 PICTURE WINDOW
NON IMPACT
CROSS SECTIONS, B.O.M. AND GLAZING DETAILS

DRAWN:	DWG NO.	REV
V.L.	08-01654	A

SCALE	DATE	SHEET
NTS	06/27/2012	4 OF 7

STATE OF TEXAS
LUIS R. LOMAS
101889
LICENSED
PROFESSIONAL ENGINEER

Luis R. Lomas P.E.
TX No.: 101889

REVISIONS			
REV	DESCRIPTION	DATE	APPROVED
A	REMOVED CHSRTS	09/12/12	R.L.

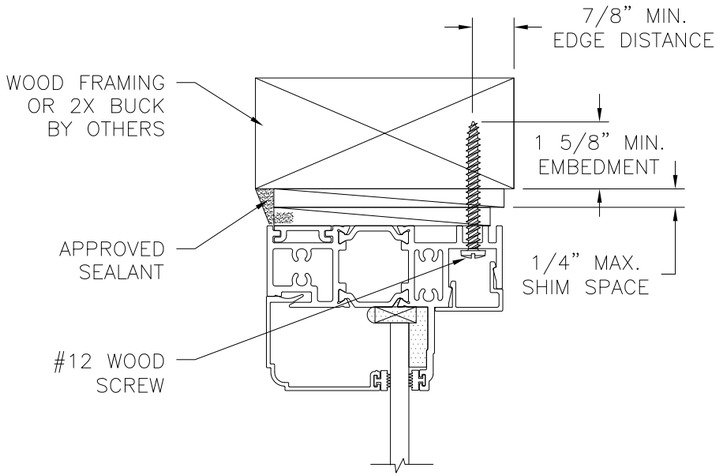

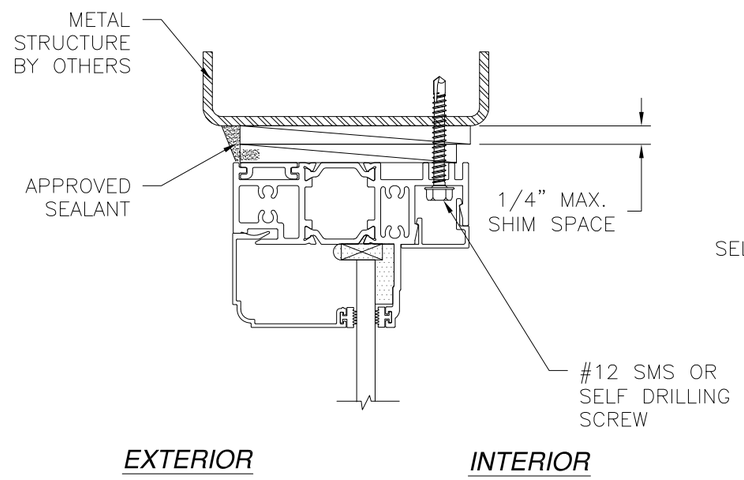

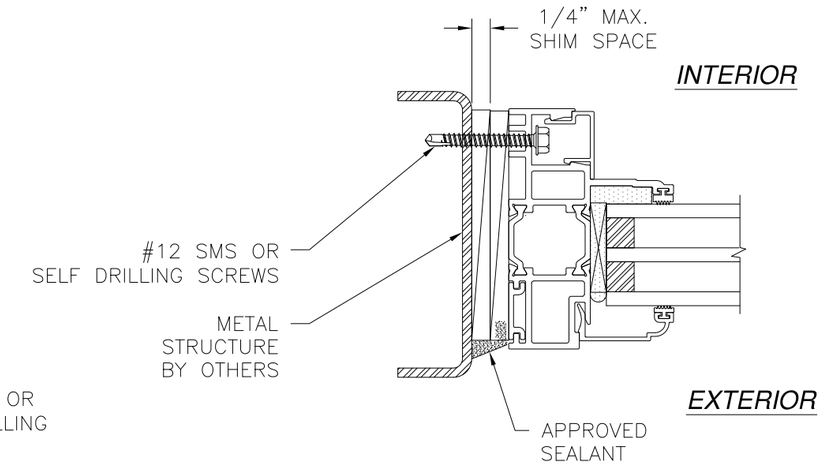

JAMB INSTALLATION DETAIL

METAL STRUCTURE INSTALLATION

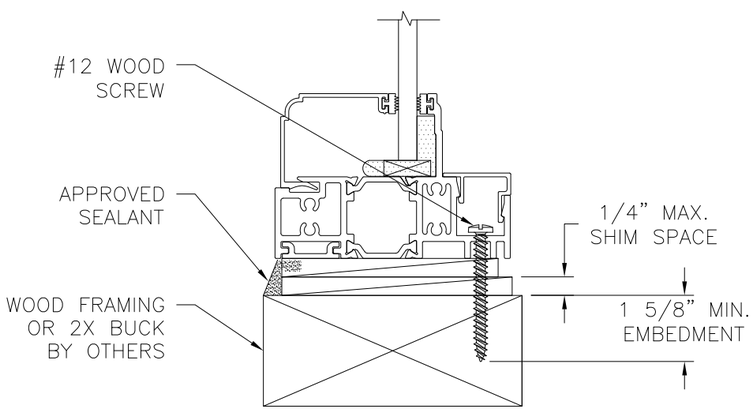

VERTICAL CROSS SECTION

WOOD FRAMING OR 2X BUCK INSTALLATION

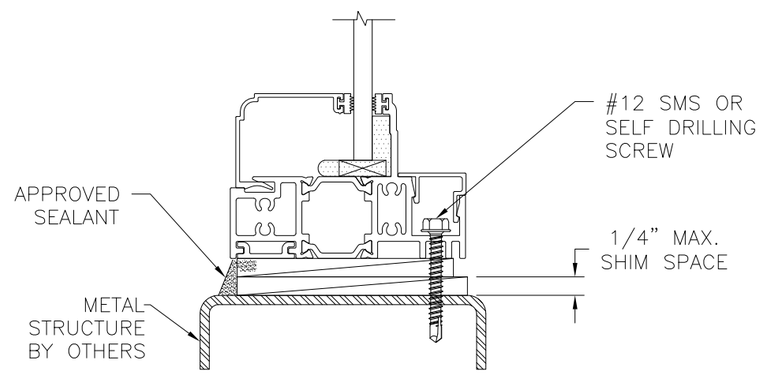

VERTICAL CROSS SECTION

METAL STRUCTURE INSTALLATION

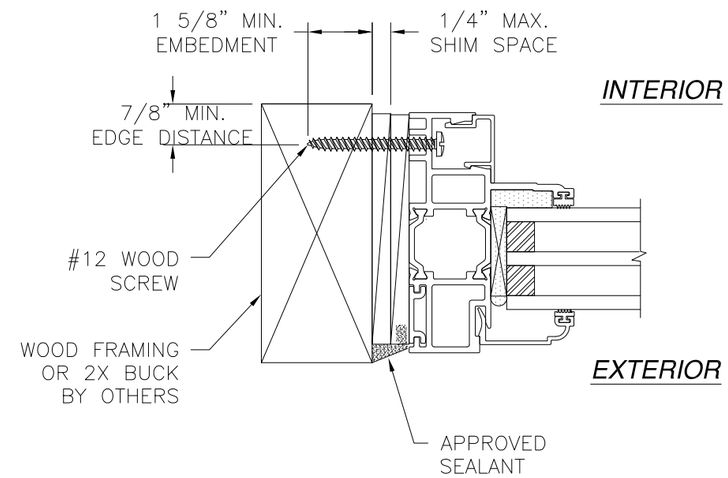

JAMB INSTALLATION DETAIL

WOOD FRAMING OR 2X BUCK INSTALLATION

SIGNED: 09/12/2012

NOTE:
INTERIOR AND EXTERIOR FINISHES, BY OTHERS, NOT SHOWN FOR CLARITY.

WinDoor INCORPORATED
7500 AMSTERDAM DRIVE
ORLANDO, FL 32832
Phone: 407.481.8400
Fax: 407.481.0505
www.windoorinc.com

9020 PICTURE WINDOW
NON IMPACT
INSTALLATION DETAILS

DRAWN:	DWG NO.	REV
V.L.	08-01654	A

SCALE	DATE	SHEET
NTS	06/27/2012	5 OF 7

Luis R. Lomas P.E.
TX No.: 101889

REVISIONS			
REV	DESCRIPTION	DATE	APPROVED
A	REMOVED CHSRTS	09/12/12	R.L.

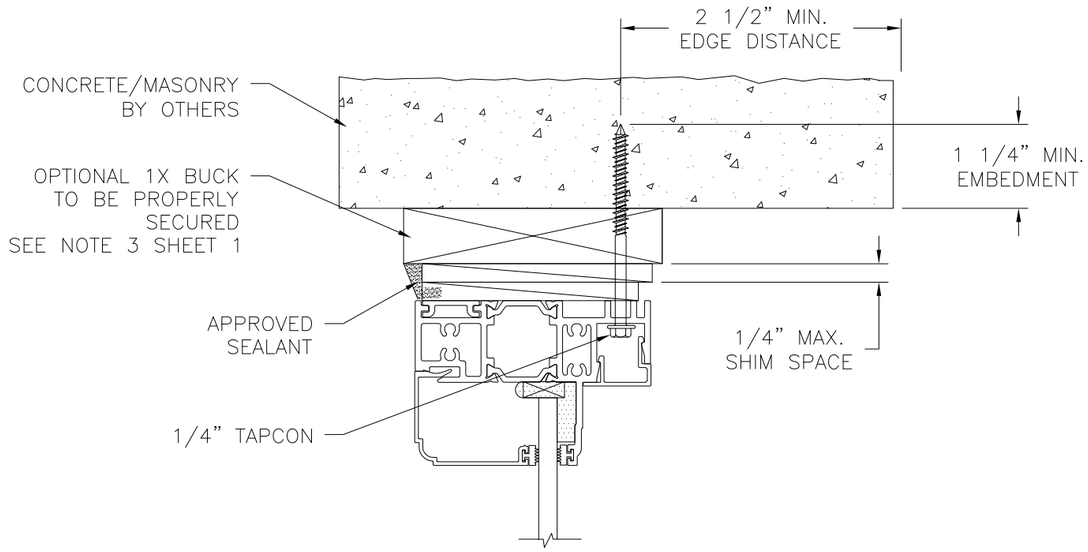

EXTERIOR *INTERIOR*

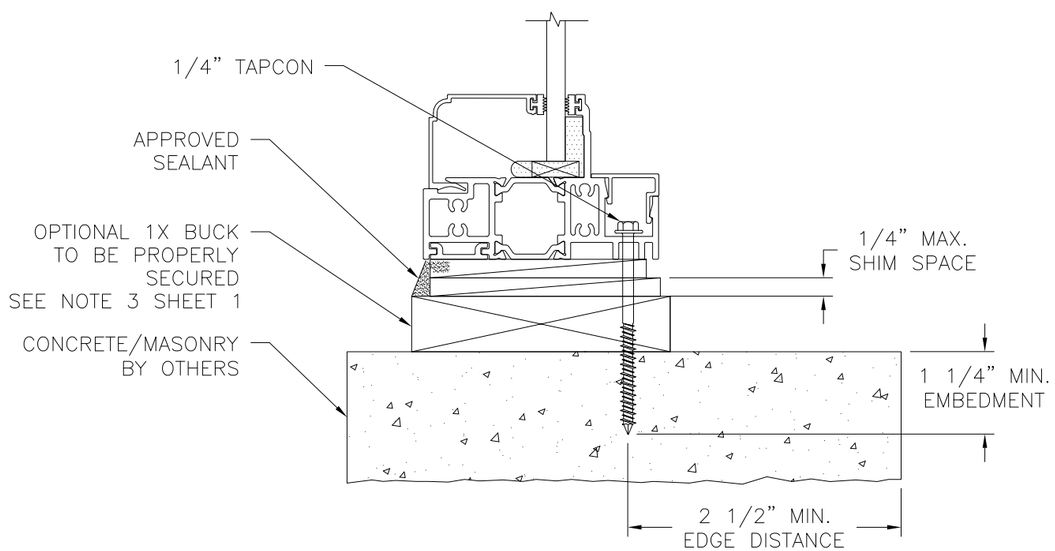

VERTICAL CROSS SECTION

CONCRETE/MASONRY INSTALLATION

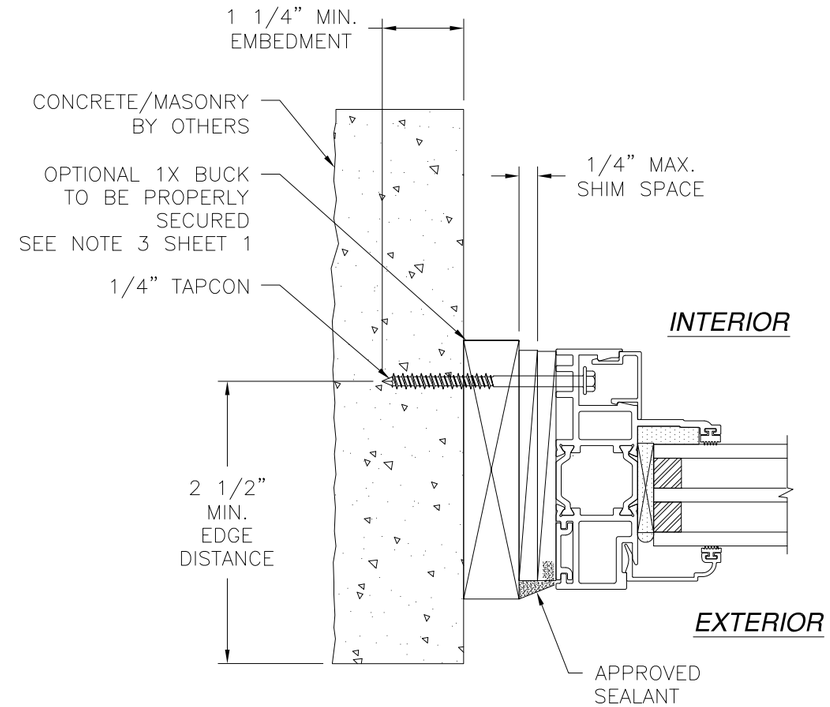

JAMB INSTALLATION DETAIL

CONCRETE/MASONRY INSTALLATION

NOTE:
INTERIOR AND EXTERIOR FINISHES, BY OTHERS, NOT SHOWN FOR CLARITY.

SIGNED: 09/12/2012

WinDoor INCORPORATED
7500 AMSTERDAM DRIVE
ORLANDO, FL 32832
Phone: 407.481.8400
Fax: 407.481.0505
www.windoorinc.com

9020 PICTURE WINDOW
NON IMPACT
INSTALLATION DETAILS

DRAWN:	DWG NO.	REV
V.L.	08-01654	A
SCALE NTS	DATE 06/27/2012	SHEET 6 OF 7

STATE OF TEXAS
LUIS R. LOMAS
101889
LICENSED
PROFESSIONAL ENGINEER

Luis R. Lomas P.E.
TX No.: 101889

REVISIONS			
REV	DESCRIPTION	DATE	APPROVED
A	REMOVED CHSRTS	09/12/12	R.L.

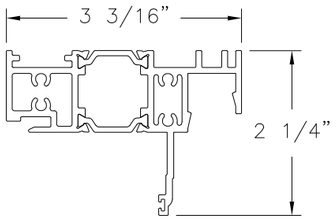

1 FRAME
ALUMINUM 6063-T6 .080" THICK

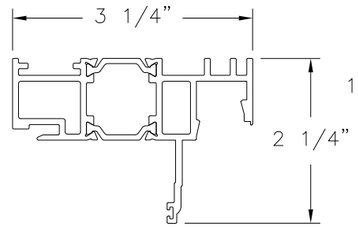

2 FRAME
ALUMINUM 6063-T6 .080" THICK

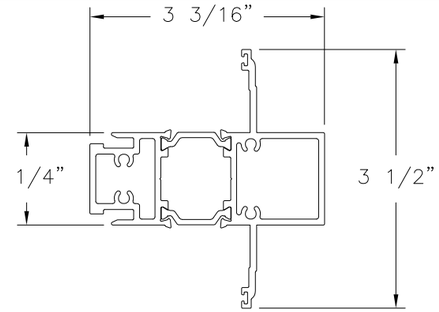

3 MULL ASSEMBLY
ALUMINUM 6063-T6 .080" THICK

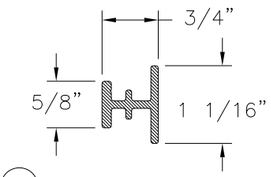

4 REINFORCEMENT
ALUMINUM 6063-T6 .100" THICK

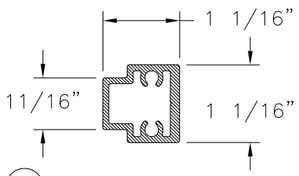

5 REINFORCEMENT
ALUMINUM 6063-T6 .080" THICK

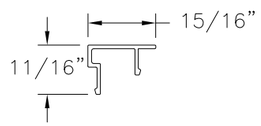

6 SCREW COVER
ALUMINUM 6063-T6 .050" THICK

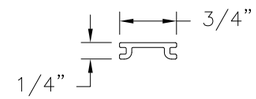

7 FLUSH ADAPTOR
ALUMINUM 6063-T6 .065" THICK

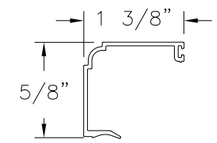

8 9/16" GLASS STOP
.063" THICK

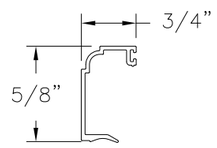

9 1" GLASS STOP
.063" THICK

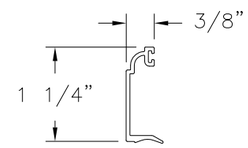

10 1 3/8" GLASS STOP
.063" THICK

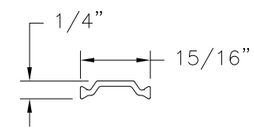

THERMAL STRUT
NYLON POLYAMIDE .070" THICK

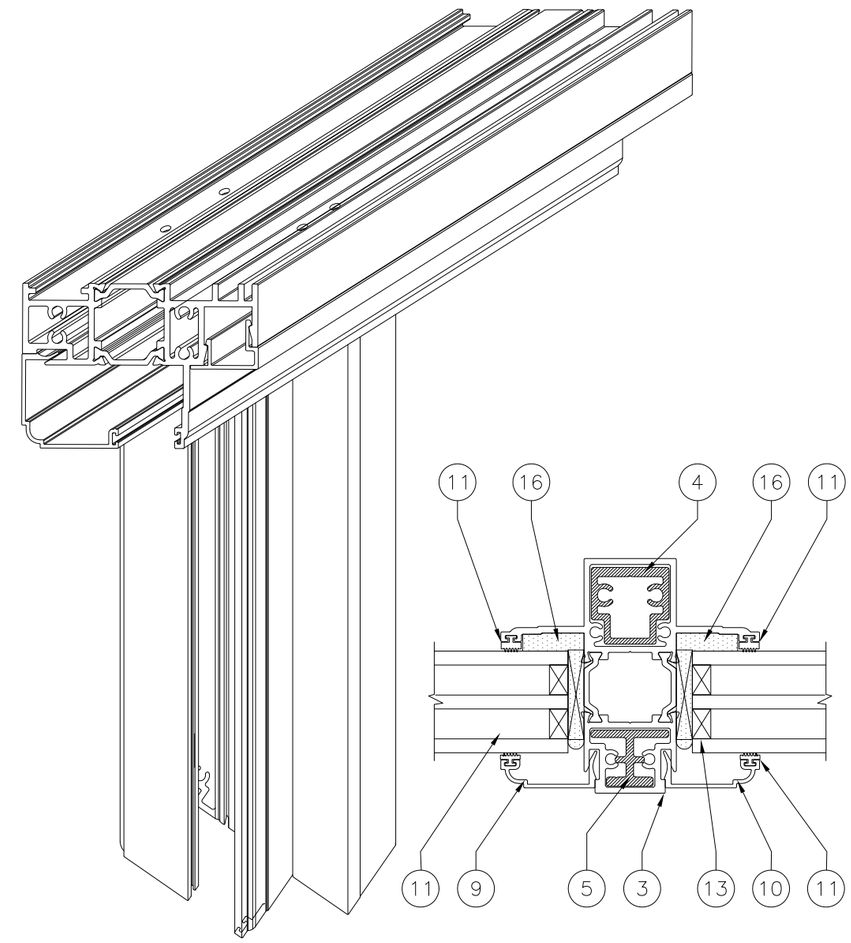

VERTICAL MULLION

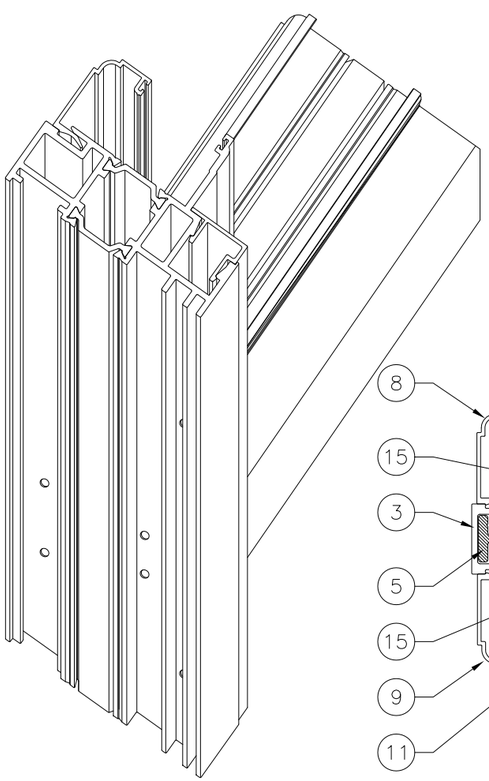

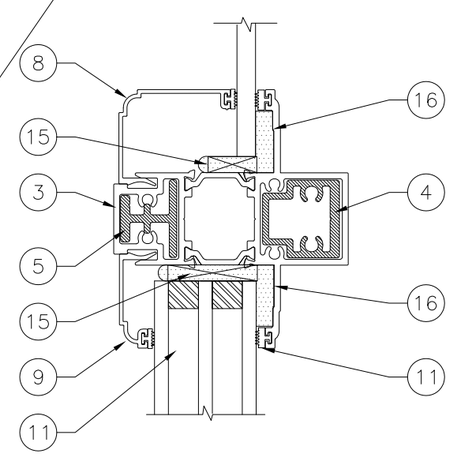

HORIZONTAL MULLION

SIGNED: 09/12/2012

WinDoor INCORPORATED
7500 AMSTERDAM DRIVE
ORLANDO, FL 32832
Phone: 407.481.8400
Fax: 407.481.0505
www.windoorinc.com

9020 PICTURE WINDOW
NON IMPACT
COMPONENTS

DRAWN:	DWG NO.	REV
V.L.	08-01654	A

SCALE	DATE	SHEET
NTS	06/27/2012	7 OF 7

Luis R. Lomas P.E.
TX No.: 101889