REVISIONS			
REV	DESCRIPTION	DATE	APPROVED

NOTES:

1. THE PRODUCT SHOWN HEREIN IS DESIGNED AND MANUFACTURED TO COMPLY WITH REQUIREMENTS OF THE INTERNATIONAL BUILDING CODE AND INTERNATIONAL RESIDENTIAL CODE WITH TEXAS STATE MODIFICATION.
2. WOOD FRAMING AND MASONRY OPENING TO BE DESIGNED AND ANCHORED TO PROPERLY TRANSFER ALL LOADS TO STRUCTURE. FRAMING AND MASONRY OPENING IS THE RESPONSIBILITY OF THE ARCHITECT OR ENGINEER OF RECORD.
3. 1X BUCK OVER MASONRY/CONCRETE IS OPTIONAL. WHERE 1X BUCK IS NOT USED DISSIMILAR MATERIALS MUST BE SEPARATED WITH APPROVED COATING OR MEMBRANE. SELECTION OF COATING OR MEMBRANE IS THE RESPONSIBILITY OF THE ARCHITECT OR ENGINEER OF RECORD.
4. ALLOWABLE STRESS INCREASE OF 1/3 WAS NOT USED IN THE DESIGN OF THE PRODUCT SHOWN HEREIN. WIND LOAD DURATION FACTOR Cd=1.6 WAS USED FOR WOOD ANCHOR CALCULATIONS.
5. FRAME MATERIAL: EXTRUDED RIGID PVC.
6. UNITS MUST BE GLAZED PER ASTM E1300–04.
7. APPROVED IMPACT PROTECTIVE SYSTEM <u>IS REQUIRED</u> FOR THIS PRODUCT IN WIND BORNE DEBRIS REGIONS.
8. SHIM AS REQUIRED AT EACH INSTALLATION ANCHOR WITH LOAD BEARING SHIM. SHIM WHERE SPACE OF 1/16" OR GREATER OCCURS. MAXIMUM ALLOWABLE SHIM STACK TO BE 1/4".
9. FOR ANCHORING INTO WOOD FRAMING OR 2X BUCK USE #10 WOOD SCREWS WITH SUFFICIENT LENGTH TO ACHIEVE A 1 3/8" MINIMUM EMBEDMENT INTO SUBSTRATE. LOCATE ANCHORS AS SHOWN IN ELEVATIONS AND INSTALLATION DETAILS.
10. FOR ANCHORING INTO MASONRY/CONCRETE USE 3/16" TAPCONS WITH SUFFICIENT LENGTH TO ACHIEVE A 1 1/4" MINIMUM EMBEDMENT INTO SUBSTRATE WITH 2 1/2'' MINIMUM EDGE DISTANCE. LOCATE ANCHORS AS SHOWN IN ELEVATIONS AND INSTALLATION DETAILS.
11. FOR ANCHORING INTO METAL STRUCTURE USE #10 SMS OR SELF DRILLING SCREWS WITH SUFFICIENT LENGTH TO ACHIEVE 3 THREADS MINIMUM BEYOND STRUCTURE INTERIOR WALL. LOCATE ANCHORS AS SHOWN IN ELEVATIONS AND INSTALLATION DETAILS.
12. ALL FASTENERS TO BE CORROSION RESISTANT.
13. INSTALLATION ANCHORS SHALL BE INSTALLED IN ACCORDANCE WITH ANCHOR MANUFACTURER'S INSTALLATION INSTRUCTIONS AND ANCHORS SHALL NOT BE USED IN SUBSTRATES WITH STRENGTHS LESS THAN THE MINIMUM STRENGTH SPECIFIED BELOW:
    A. WOOD – MINIMUM SPECIFIC GRAVITY OF G=0.42
    B. CONCRETE – MINIMUM COMPRESSIVE STRENGTH OF 3,192 PSI.
    C. MASONRY – STRENGTH CONFORMANCE TO ASTM C–90, GRADE N, TYPE 1 (OR GREATER).
    D. METAL STRUCTURE: STEEL 18GA, 33KSI OR ALUMINUM 6063–T5 1/8" THICK MINIMUM

SIGNED: 07/01/2013

TABLE OF CONTENTS

SHEET NO.	DESCRIPTION
1	NOTES
2 – 3	ELEVATIONS AND ANCHORING
4	CROSS SECTIONS & GLAZING DETAILS
5	B.O.M. & CROSS SECTIONS
6 – 7	INSTALATION DETAILS
8	COMPONENTS

WinDoor INCORPORATED
7500 AMSTERDAM DRIVE
ORLANDO, FL 32832
Phone: 407.481.8400
Fax: 407.481.0505
www.windoorinc.com

V–470 PVC HORIZONTAL SLIDING WINDOW
REINFORCED NON–IMPACT
NOTES

DRAWN:	DWG NO.	REV
V.L.	08–02110	–

SCALE	DATE	SHEET
NTS	07/01/13	1 OF 8

STATE OF TEXAS
LUIS R. LOMAS
101889
LICENSED
PROFESSIONAL ENGINEER

Luis R. Lomas P.E.
Texas No. 101889

REVISIONS			
REV	DESCRIPTION	DATE	APPROVED

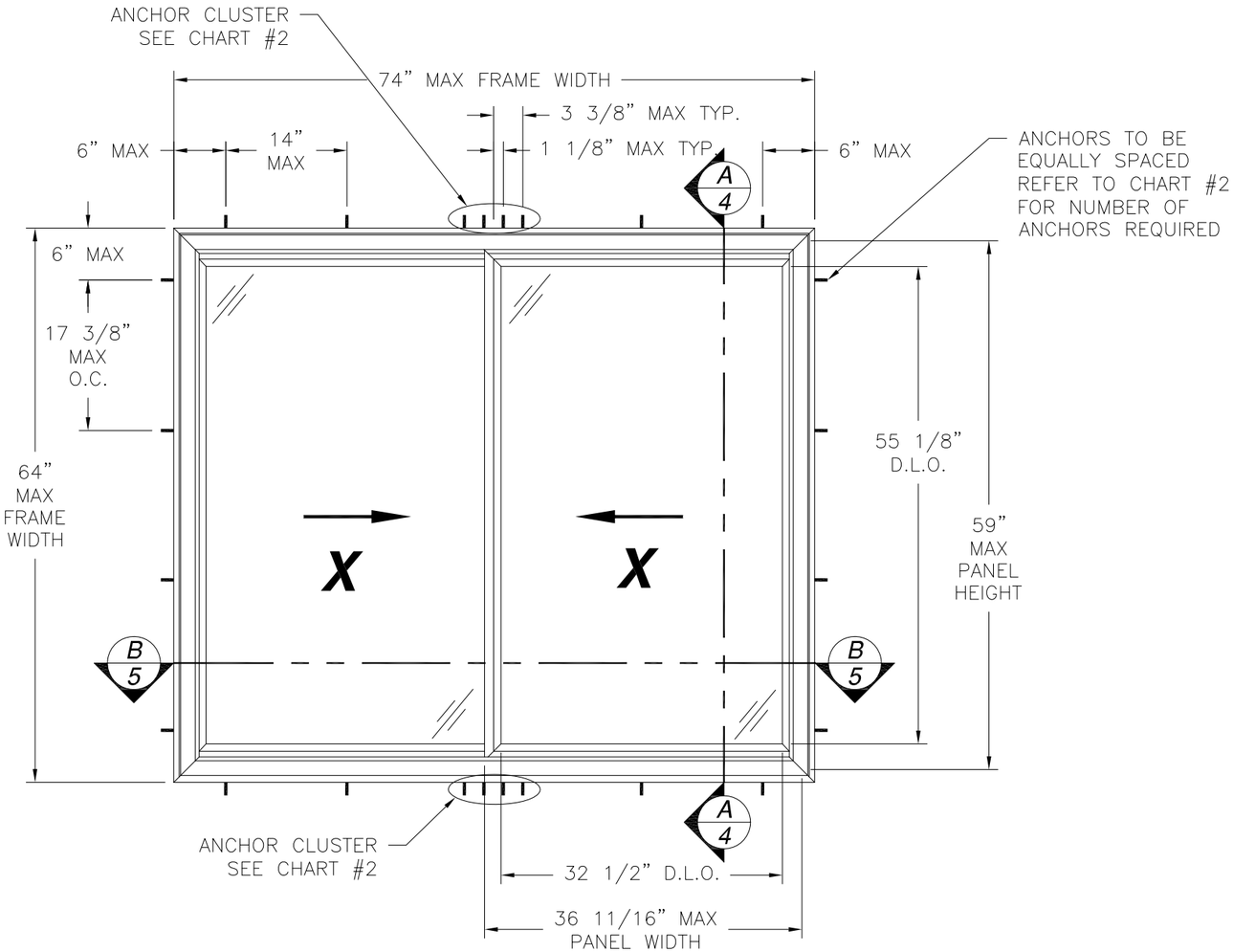

V-470 HORIZONTAL ROLLING WINDOW

EXTERIOR VIEW

DESIGN PRESSURE RATING	IMPACT RATING
±80.0PSF	NONE

REFER TO CHART #1 FOR OTHER UNIT RATINGS

CHART #1

Maximum design pressure (psf)										
Frame Height (in)	Frame Width (in)									
	36.00		48.00		60.00		72.00		74.00	
	Pos	Neg	Pos	Neg	Pos	Neg	Pos	Neg	Pos	Neg
30.0	80.0	80.0	80.0	80.0	80.0	80.0	80.0	80.0	80.0	80.0
36.0	80.0	80.0	80.0	80.0	80.0	80.0	80.0	80.0	80.0	80.0
42.0	80.0	80.0	80.0	80.0	80.0	80.0	80.0	80.0	80.0	80.0
48.0	80.0	80.0	80.0	80.0	80.0	80.0	80.0	80.0	80.0	80.0
54.0	80.0	80.0	80.0	80.0	80.0	80.0	80.0	80.0	80.0	80.0
60.0	80.0	80.0	80.0	80.0	80.0	80.0	80.0	80.0	80.0	80.0
64.0	80.0	80.0	80.0	80.0	80.0	80.0	80.0	80.0	80.0	80.0

CHART #2

Number of anchor locations required															
Frame Height (in)	Frame width (in)														
	36.00			48.00			60.00			72.00			74.00		
	H&S	Jamb	Mull H&S	H&S	Jamb	Mull H&S	H&S	Jamb	Mull H&S	H&S	Jamb	Mull H&S	H&S	Jamb	Mull H&S
30.00	1	2	1	1	2	1	1	2	1	2	2	1	2	2	1
36.00	1	2	1	1	2	2	1	2	2	2	2	2	2	2	2
42.00	1	2	2	1	2	2	1	2	2	2	2	2	2	2	2
48.00	1	3	2	1	3	2	1	3	2	2	3	3	2	3	3
54.00	1	3	2	1	3	3	1	3	3	2	3	3	2	3	3
60.00	1	3	2	1	3	3	1	3	3	2	4	4	2	4	4
64.00	1	3	2	1	3	3	1	3	3	2	4	4	2	4	4

SIGNED: 07/01/2013

WinDoor INCORPORATED
7500 AMSTERDAM DRIVE
ORLANDO, FL 32832
Phone: 407.481.8400
Fax: 407.481.0505
www.windoorinc.com

V-470 PVC HORIZONTAL SLIDING WINDOW
REINFORCED NON-IMPACT
XX ELEVATION AND ANCHORING

DRAWN:	DWG NO.	REV
V.L.	08-02110	–
SCALE NTS	DATE 07/01/13	SHEET 2 OF 8

STATE OF TEXAS
LUIS R. LOMAS
101889
LICENSED
PROFESSIONAL ENGINEER

Luis R. Lomas P.E.
Texas No. 101889

REVISIONS			
REV	DESCRIPTION	DATE	APPROVED

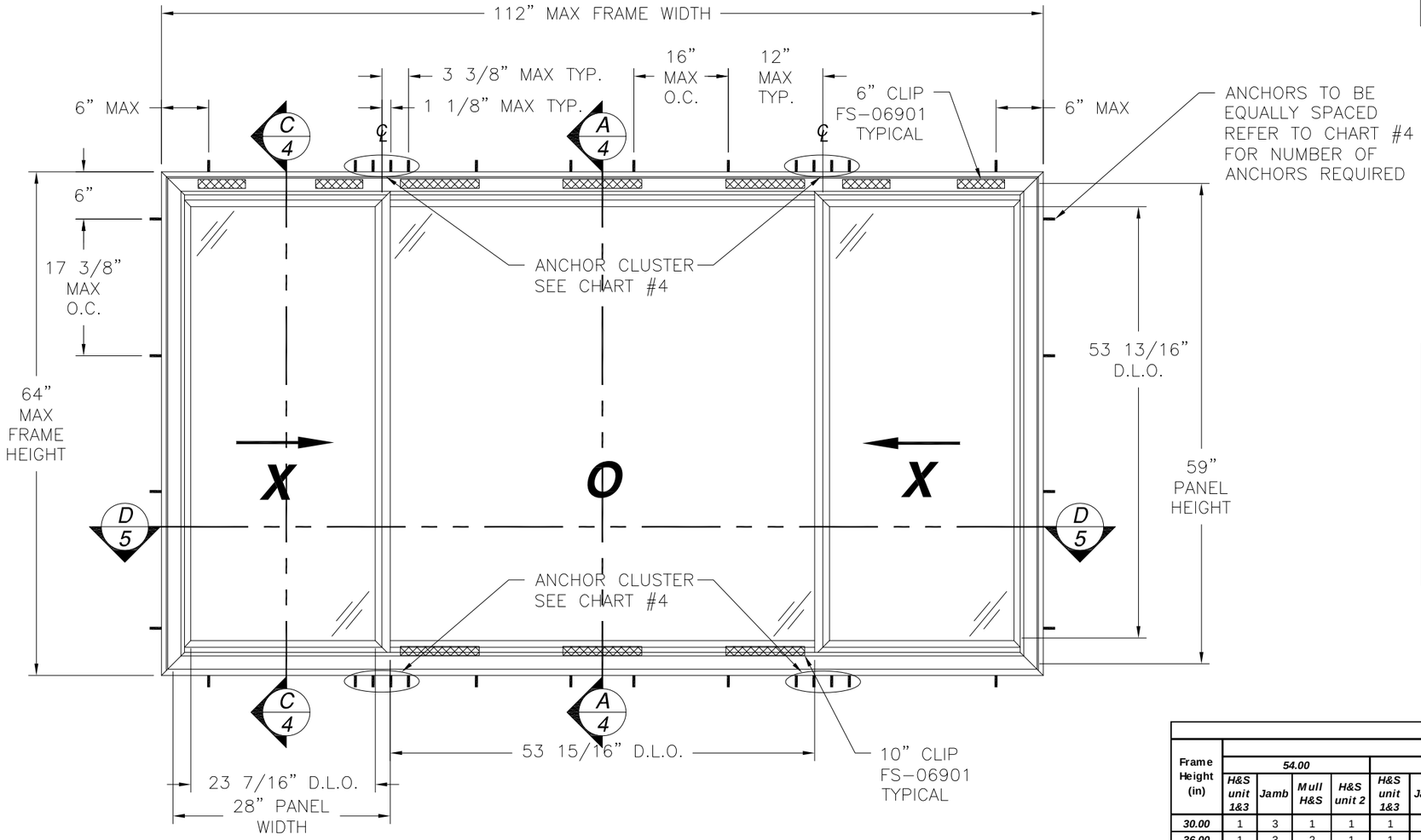

V-470 HORIZONTAL ROLLING WINDOW

EXTERIOR VIEW

DESIGN PRESSURE RATING	IMPACT RATING
±80.0PSF	NONE

REFER TO CHART #3 FOR OTHER UNIT RATINGS

CHART #3

Maximum design pressure capacity chart (psf)										
Frame Height (in)	Unit width (in)									
	54.00		72.00		90.00		108.00		112.00	
	13.50		18.00		22.50		27.00		28.00	
	27.00		36.00		45.00		54.00		56.00	
	Pos	Neg	Pos	Neg	Pos	Neg	Pos	Neg	Pos	Neg
30.0	80.0	80.0	80.0	80.0	80.0	80.0	80.0	80.0	80.0	80.0
36.0	80.0	80.0	80.0	80.0	80.0	80.0	80.0	80.0	80.0	80.0
42.0	80.0	80.0	80.0	80.0	80.0	80.0	80.0	80.0	80.0	80.0
48.0	80.0	80.0	80.0	80.0	80.0	80.0	80.0	80.0	80.0	80.0
54.0	80.0	80.0	80.0	80.0	80.0	80.0	80.0	80.0	80.0	80.0
60.0	80.0	80.0	80.0	80.0	80.0	80.0	80.0	80.0	80.0	80.0
64.0	80.0	80.0	80.0	80.0	80.0	80.0	80.0	80.0	80.0	80.0

CHART #4

Number of anchors required																				
Frame Height (in)	Frame width (in)																			
	54.00				72.00				90.00				108.00				112.00			
	H&S unit 1&3	Jamb	Mull H&S	H&S unit 2	H&S unit 1&3	Jamb	Mull H&S	H&S unit 2	H&S unit 1&3	Jamb	Mull H&S	H&S unit 2	H&S unit 1&3	Jamb	Mull H&S	H&S unit 2	H&S unit 1&3	Jamb	Mull H&S	H&S unit 2
30.00	1	3	1	1	1	3	1	2	1	3	1	2	1	3	1	3	1	3	1	3
36.00	1	3	2	1	1	3	2	2	1	3	2	2	1	3	2	3	1	3	2	3
42.00	1	3	2	1	1	3	2	2	1	3	2	3	1	3	2	3	1	3	2	3
48.00	1	4	2	1	1	4	2	2	1	4	2	3	1	4	3	3	1	4	3	4
54.00	1	4	2	1	1	4	3	2	1	4	3	3	1	4	3	3	1	4	3	4
60.00	1	4	2	1	1	4	3	2	1	4	3	3	1	4	4	3	1	4	4	4
64.00	1	4	3	1	1	4	3	2	1	4	4	3	1	4	4	3	1	4	4	4

SIGNED: 07/01/2013

WinDoor INCORPORATED
7500 AMSTERDAM DRIVE
ORLANDO, FL 32832
Phone: 407.481.8400
Fax: 407.481.0505
www.windoorinc.com

V-470 PVC HORIZONTAL SLIDING WINDOW
REINFORCED NON-IMPACT
XOX ELEVATION AND ANCHORING

DRAWN:	DWG NO.	REV
V.L.	08-02110	–
SCALE NTS	DATE 07/01/13	SHEET 3 OF 8

STATE OF TEXAS
LUIS R. LOMAS
101889
LICENSED
PROFESSIONAL ENGINEER

Luis R. Lomas P.E.
Texas No. 101889

REVISIONS			
REV	DESCRIPTION	DATE	APPROVED

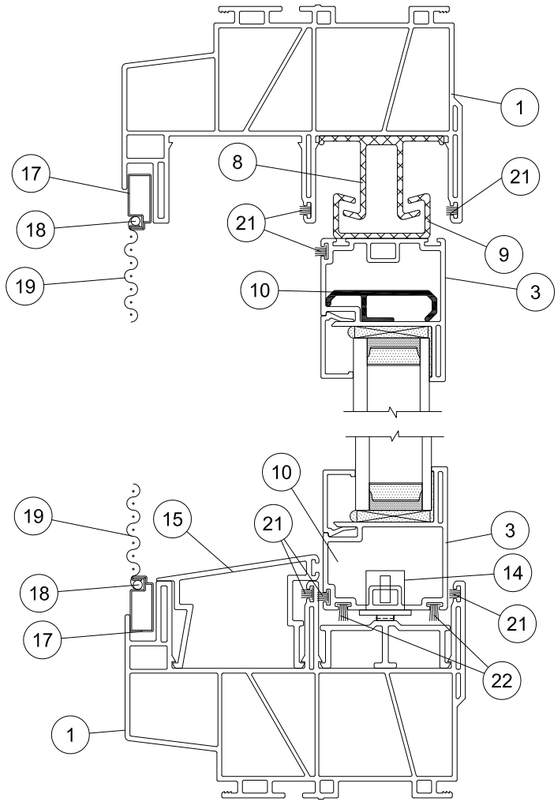

C/4 VERTICAL CROSS SECTION

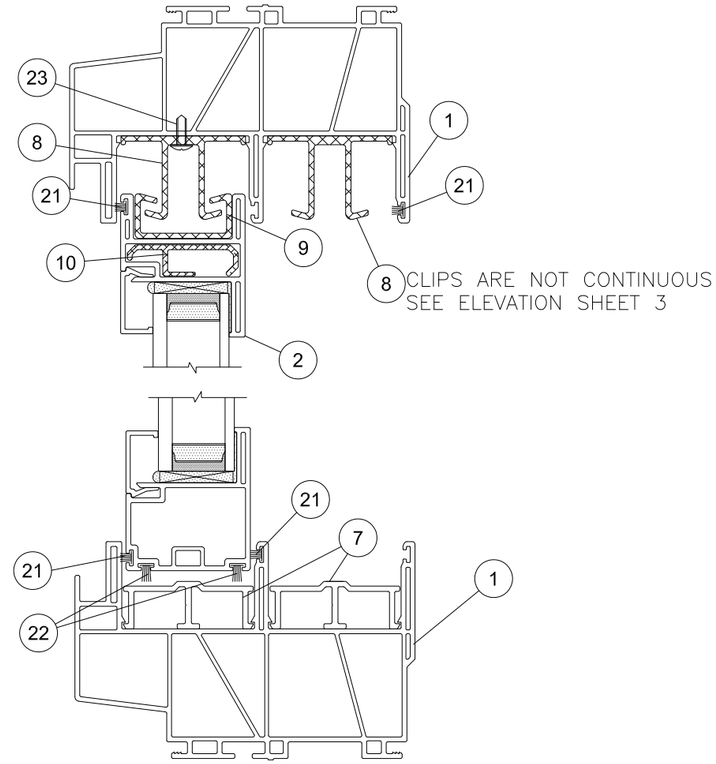

A/4 VERTICAL CROSS SECTION

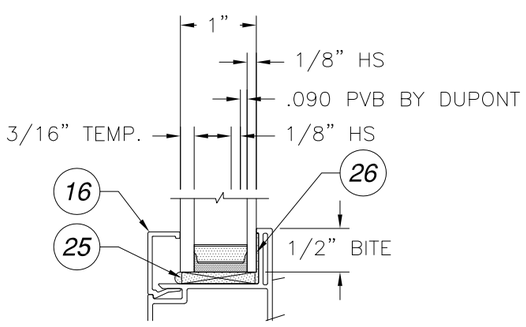

GLAZING DETAIL A

SIGNED: 07/01/2013

WinDoor INCORPORATED
7500 AMSTERDAM DRIVE
ORLANDO, FL 32832
Phone: 407.481.8400
Fax: 407.481.0505
www.windoorinc.com

V-470 PVC HORIZONTAL SLIDING WINDOW
REINFORCED NON-IMPACT
CROSS SECTIONS & GLAZING DETAILS

DRAWN:	DWG NO.	REV
V.L.	08-02110	–
SCALE NTS	DATE 07/01/13	SHEET 4 OF 8

STATE OF TEXAS
LUIS R. LOMAS
101889
LICENSED
PROFESSIONAL ENGINEER

Luis R. Lomas P.E.
Texas No. 101889

BILL OF MATERIALS				
ITEM NO.:	PART NUMBER	DESCRIPTION	MANUFACTURER	MATERIAL
1	DS9301	FRAME	VEKA	RIGID PVC
2	SE9341	TOP RAIL	VEKA	RIGID PVC
3	SE9345	BOTTOM RAIL & JAMB	VEKA	RIGID PVC
4	SE9344	MEETING STILE	VEKA	RIGID PVC
5	SE9346	LOCK STILE	VEKA	RIGID PVC
6	SE9354	KEEPER	VEKA	RIGID PVC
7	S51852	SILL TRACK	KEYMARK	ALUMINUM 6063-T6
8	FS06901	FRAME IMPACT ADAPTOR CLIP	KEYMARK	ALUMINUM 6063-T6
9	FS06902	SASH IMPACT ADAPTOR CLIP	KEYMARK	ALUMINUM 6063-T6
10	FS06903	TOP RAIL REINFORCEMENT	KEYMARK	ALUMINUM 6063-T6
11	FS07142	EXT. MEETING RAIL REINF.	KEYMARK	ALUMINUM 6063-T6
12	FS07141	MEETING STILE & JAMB STILE REINF.	KEYMARK	ALUMINUM 6063-T6
13	FS07143	LOCK STILE REINFORCEMENT	KEYMARK	ALUMINUM 6063-T6
14	V470-SS-ROHOU	ROLLER/HOUSING ASSEMBLY		
15	WD3-WH-168V	SLOPED CHANNEL COVER	MOR-X	RIGID PVC
16	BV137	1" GLAZING BEAD	VEKA	RIGID PVC
17	S4000-XX-150	SCREEN FRAME	ROLLFORM	
18	S10010-BL-2200R	SCREEN SPLINE	ROLLFORM	
19	SBV-XX-0600Z	SCREEN CLOTH	ROLLFORM	
20	54080-ML-FB11	SCREEN CORNER KEY	ROLLFORM	
21	121999	0.187"x0.270" WEATHERSTRIPPING	ULTRAFAB	
22	122003	0.187"x0.350" WEATHERSTRIPPING	ULTRAFAB	
23		#8x1" SCREW		
24	V400-WH-9227	METAL CAM LOCK & KEEPER	VISION	
25	01-100-7755-002	SETTING BLOCK	FRANK LOWE	NEOPRENE 80 DURO
26	SIKAFLEX 552	POLYURETHANE	SIKA	

REVISIONS			
REV	DESCRIPTION	DATE	APPROVED

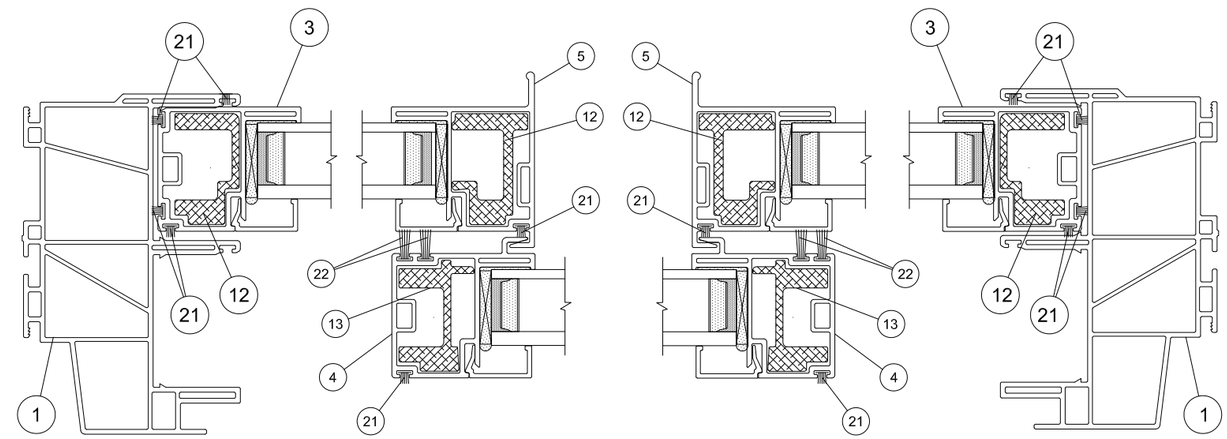

D/5 HORIZONTAL CROSS SECTION

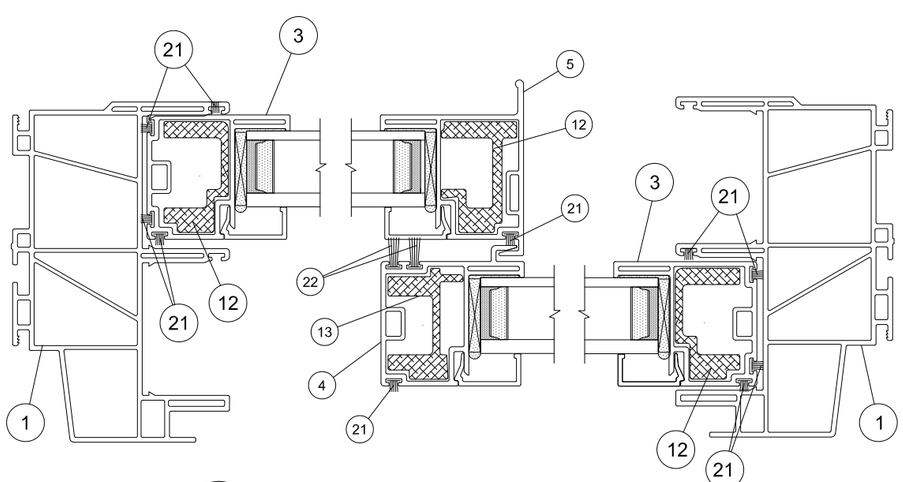

B/5 HORIZONTAL CROSS SECTION

SIGNED: 07/01/2013

WinDoor INCORPORATED
7500 AMSTERDAM DRIVE
ORLANDO, FL 32832
Phone: 407.481.8400
Fax: 407.481.0505
www.windoorinc.com

V-470 PVC HORIZONTAL SLIDING WINDOW
REINFORCED NON-IMPACT
B.O.M. & CROSS SECTIONS

DRAWN:	DWG NO.	REV
V.L.	08-02110	–
SCALE NTS	DATE 07/01/13	SHEET 5 OF 8

STATE OF TEXAS
LUIS R. LOMAS
101889
LICENSED
PROFESSIONAL ENGINEER

Luis R. Lomas P.E.
Texas No. 101889

REVISIONS			
REV	DESCRIPTION	DATE	APPROVED

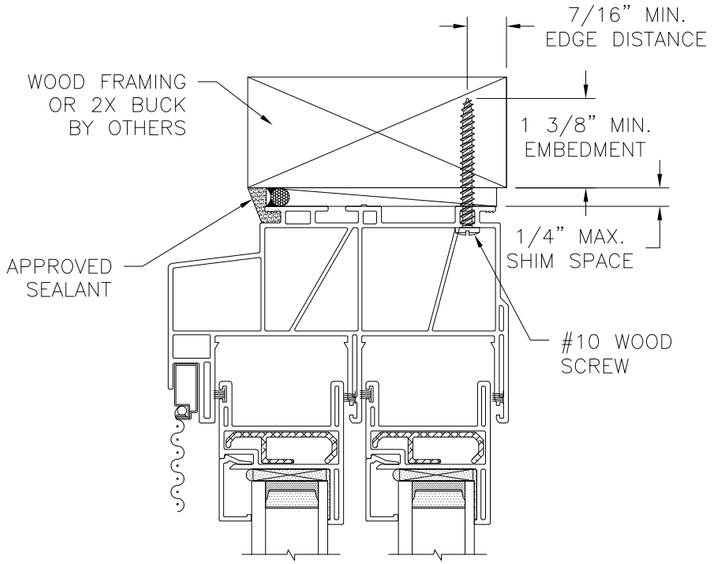

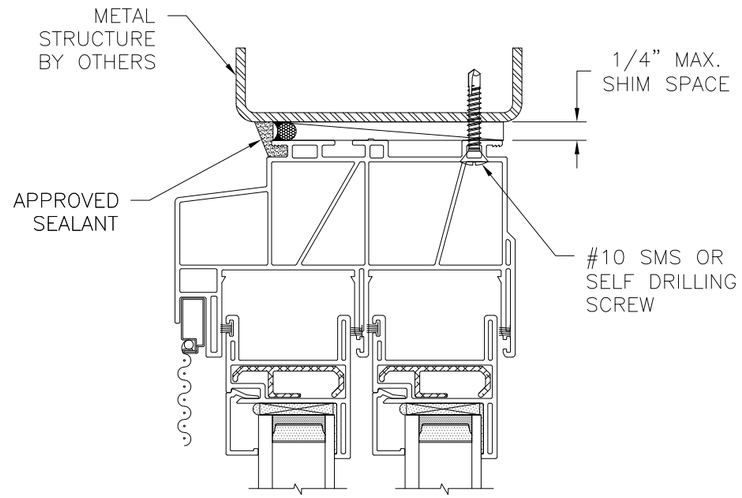

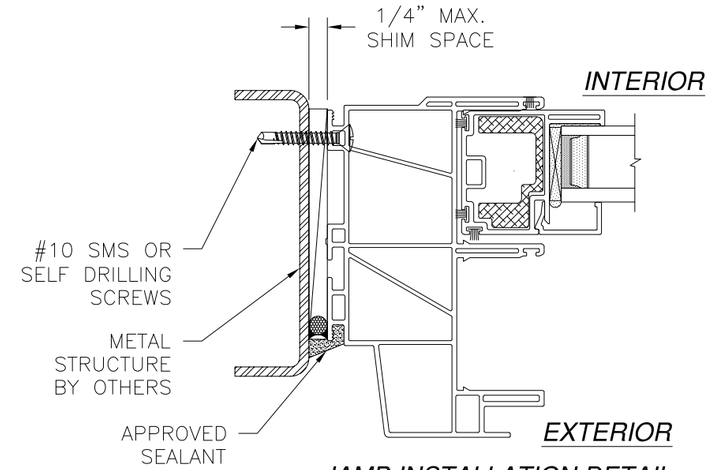

JAMB INSTALLATION DETAIL
METAL STRUCTURE INSTALLATION

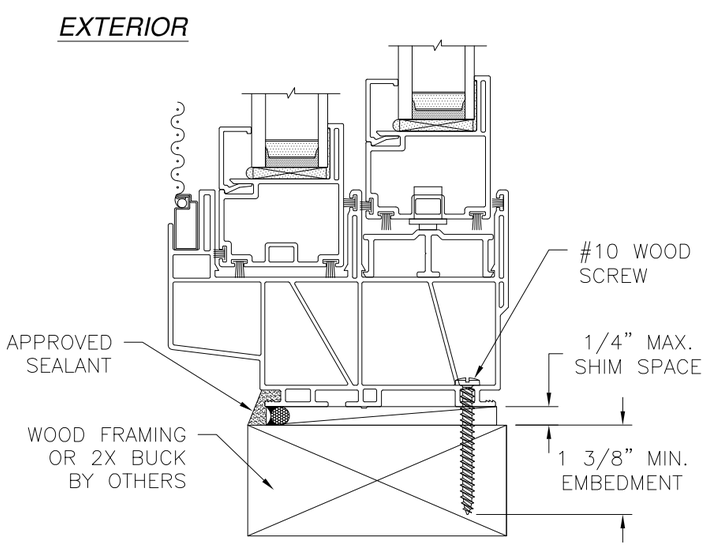

VERTICAL CROSS SECTION
WOOD FRAMING OR 2X BUCK INSTALLATION

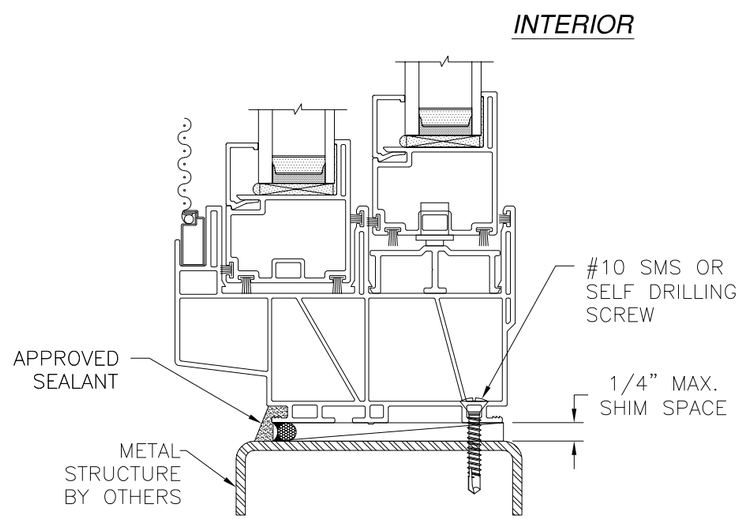

VERTICAL CROSS SECTION
METAL STRUCTURE INSTALLATION

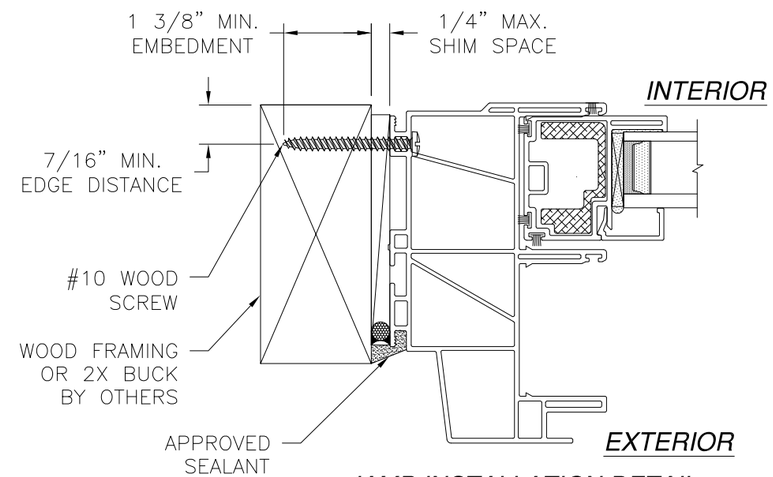

JAMB INSTALLATION DETAIL
WOOD FRAMING OR 2X BUCK INSTALLATION

NOTE:
1. INTERIOR AND EXTERIOR FINISHES, BY OTHERS, NOT SHOWN FOR CLARITY.
2. PERIMETER AND JOINT SEALANT BY OTHERS TO BE DESIGNED IN ACCORDANCE WITH ASTM E2112

SIGNED: 07/01/2013

WinDoor INCORPORATED
7500 AMSTERDAM DRIVE
ORLANDO, FL 32832
Phone: 407.481.8400
Fax: 407.481.0505
www.windoorinc.com

V-470 PVC HORIZONTAL SLIDING WINDOW
REINFORCED NON-IMPACT
INSTALLATION DETAILS

DRAWN:	DWG NO.	REV
V.L.	08-02110	–
SCALE NTS	DATE 07/01/13	SHEET 6 OF 8

STATE OF TEXAS
LUIS R. LOMAS
101889
LICENSED
PROFESSIONAL ENGINEER

Luis R. Lomas P.E.
Texas No. 101889

REVISIONS			
REV	DESCRIPTION	DATE	APPROVED

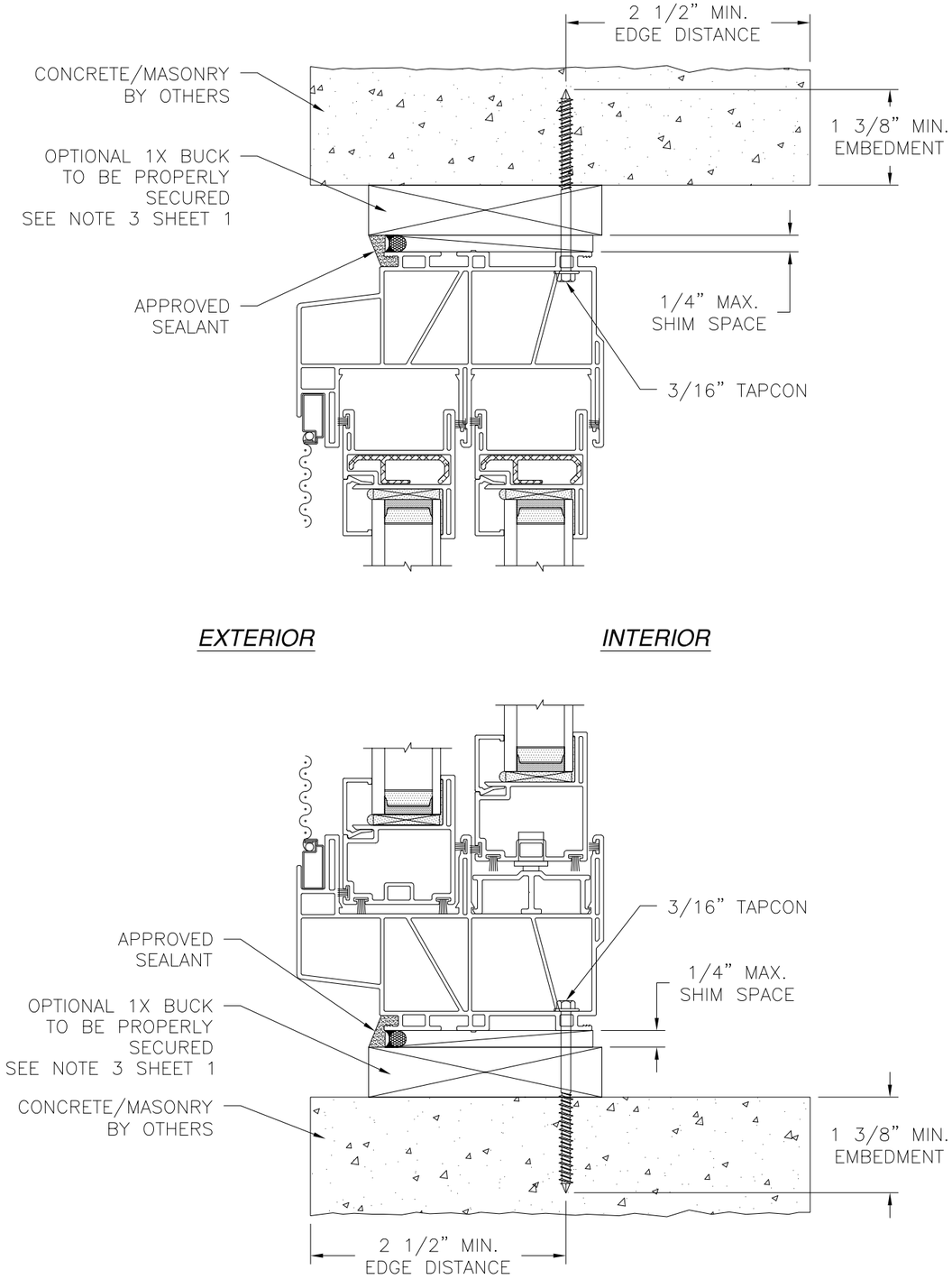

VERTICAL CROSS SECTION
CONCRETE/MASONRY INSTALLATION

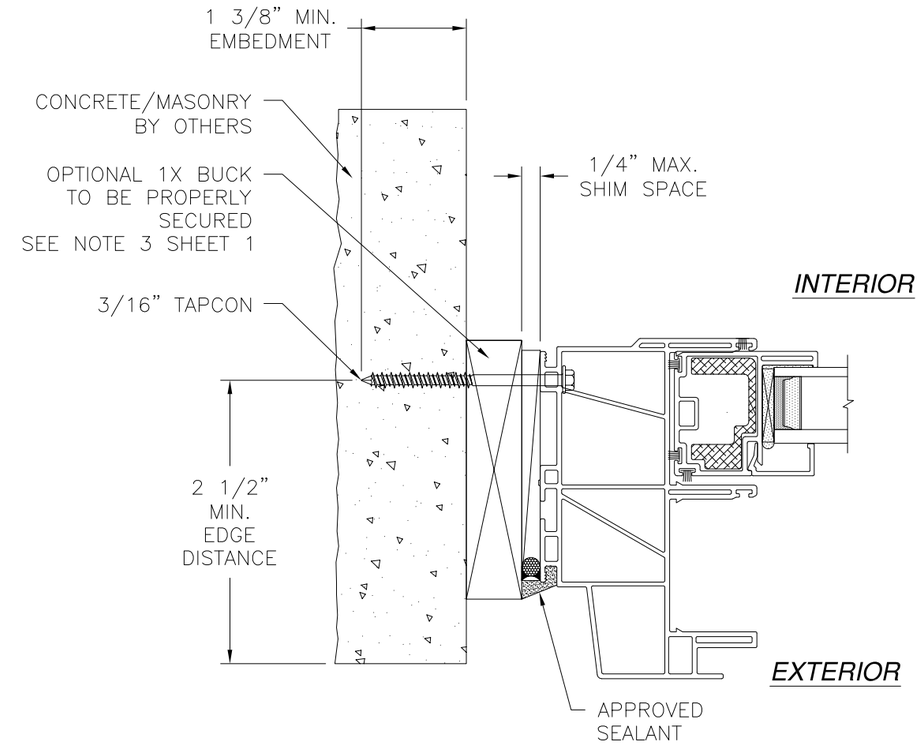

JAMB INSTALLATION DETAIL
CONCRETE/MASONRY INSTALLATION

NOTE:
1. INTERIOR AND EXTERIOR FINISHES, BY OTHERS, NOT SHOWN FOR CLARITY.
2. PERIMETER AND JOINT SEALANT BY OTHERS TO BE DESIGNED IN ACCORDANCE WITH ASTM E2112

SIGNED: 07/01/2013

WinDoor INCORPORATED
7500 AMSTERDAM DRIVE
ORLANDO, FL 32832
Phone: 407.481.8400
Fax: 407.481.0505
www.windoorinc.com

V-470 PVC HORIZONTAL SLIDING WINDOW
REINFORCED NON-IMPACT
INSTALLATION DETAILS

DRAWN:	DWG NO.	REV
V.L.	08-02110	–
SCALE NTS	DATE 07/01/13	SHEET 7 OF 8

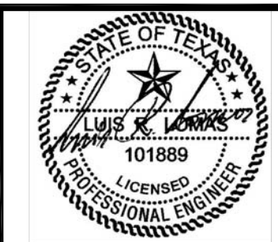

Luis R. Lomas P.E.
Texas No. 101889

REVISIONS			
REV	DESCRIPTION	DATE	APPROVED

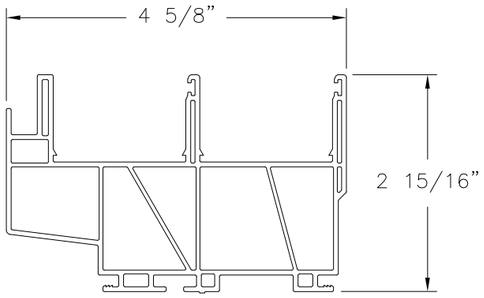

FRAME (DS9301)
VINYL PVC .065" THICK

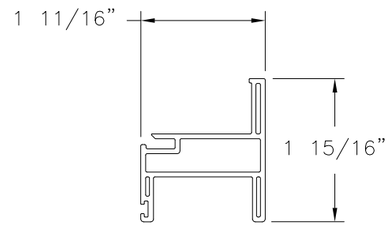

SASH TOP (SE9341)
VINYL PVC .065" THICK

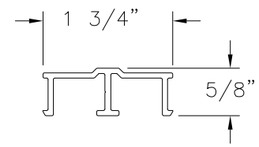

SILL TRACK (S51852)
ALUMINUM 6063-T6 .07" THICK

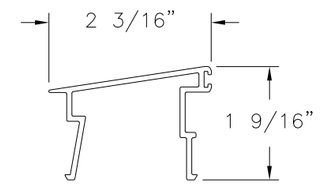

SLOPED CHANNEL COVER (WD3-WH-168V)
RIGID PVC .07" THICK

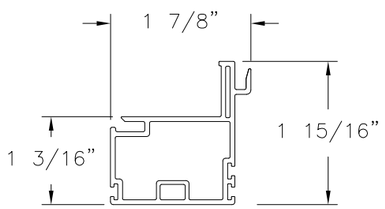

MEETING RAIL (SE9344)
VINYL PVC .065" THICK

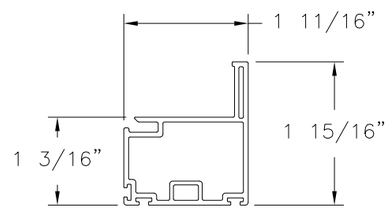

BOTTOM RAIL, JAMB AND STILES (SE9345)
VINYL PVC .065" THICK

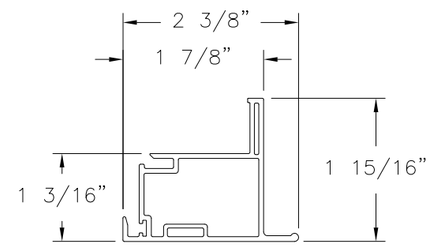

LOCK STILE (SE9346)
VINYL PVC .065" THICK

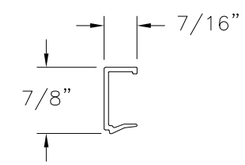

1" GLAZING BEAD (BV137)
VINYL PVC .059" THICK

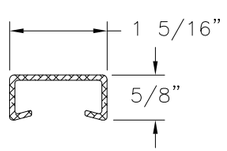

ADAPTER CLIP (FS06902)
ALUMINUM 6063-T6 .07" THICK

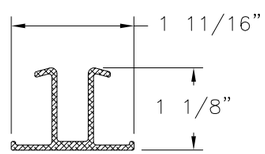

ADAPTER CLIP (FS06901)
ALUMINUM 6063-T6 .07" THICK

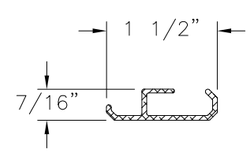

REINFORCEMENT (FS06903)
ALUMINUM 6063-T6 .065" THICK

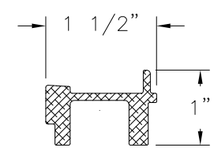

REINFORCEMENT (FS07142)
ALUMINUM 6063-T6 .09" THICK

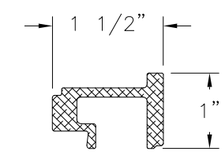

REINFORCEMENT (FS07143)
ALUMINUM 6063-T6 .09" THICK

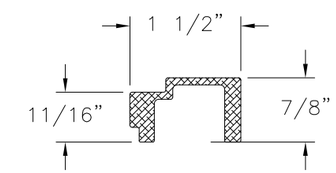

REINFORCEMENT (FS07141)
ALUMINUM 6063-T5 .095" THICK

SIGNED: 07/01/2013

WinDoor INCORPORATED
7500 AMSTERDAM DRIVE
ORLANDO, FL 32832
Phone: 407.481.8400
Fax: 407.481.0505
www.windoorinc.com

V-470 PVC HORIZONTAL SLIDING WINDOW
REINFORCED NON-IMPACT
COMPONENTS

DRAWN:	DWG NO.	REV
V.L.	08-02110	–
SCALE NTS	DATE 07/01/13	SHEET 8 OF 8

STATE OF TEXAS
LUIS R. LOMAS
101889
LICENSED
PROFESSIONAL ENGINEER

Luis R. Lomas P.E.
Texas No. 101889