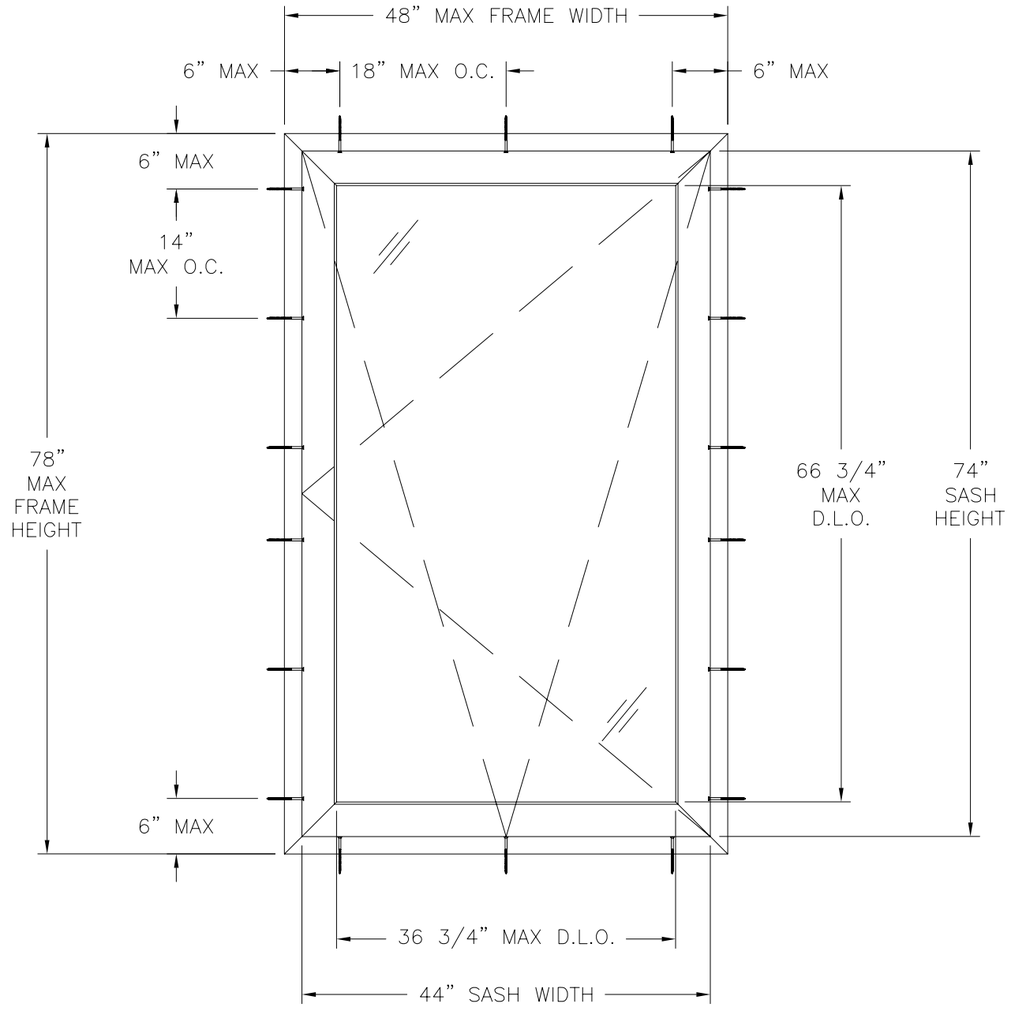

V101 uPVC TILT AND TURN

EXTERIOR VIEW

DESIGN PRESSURE RATING	*IMPACT RATING*
+70.0/-100.0PSF	*NONE*

REVISIONS			
REV	DESCRIPTION	DATE	APPROVED

NOTES:

1) THE PRODUCT SHOWN HEREIN IS DESIGNED AND MANUFACTURED TO COMPLY WITH REQUIREMENTS OF THE 2006 IRC, 2006 IBC WITH STATE OF TEXAS MODIFICATIONS..
2) WOOD FRAMING AND MASONRY OPENING TO BE DESIGNED AND ANCHORED TO PROPERLY TRANSFER ALL LOADS TO STRUCTURE. FRAMING AND MASONRY OPENING IS THE RESPONSIBILITY OF THE ARCHITECT OR ENGINEER OF RECORD.
3) 1X BUCK OVER MASONRY/CONCRETE IS OPTIONAL. WHERE 1X BUCK IS NOT USED DISSIMILAR MATERIALS MUST BE SEPARATED WITH APPROVED COATING OR MEMBRANE. SELECTION OF COATING OR MEMBRANE IS THE RESPONSIBILITY OF THE ARCHITECT OR ENGINEER OF RECORD.
4) ALLOWABLE STRESS INCREASE OF 1/3 WAS NOT USED IN THE DESIGN OF THE PRODUCT SHOWN HEREIN. WIND LOAD DURATION FACTOR Cd=1.6 WAS USED FOR WOOD ANCHOR CALCULATIONS.
5) FRAME MATERIAL: EXTRUDED RIGID PVC.
6) UNITS MUST BE GLAZED PER ASTM E1300.
7) APPROVED IMPACT PROTECTIVE SYSTEM <u>IS REQUIRED</u> FOR THIS PRODUCT IN WIND BORNE DEBRIS REGIONS.
8) SHIM AS REQUIRED AT EACH INSTALLATION ANCHOR WITH LOAD BEARING SHIM. SHIM WHERE SPACE OF 1/16" OR GREATER OCCURS. MAXIMUM ALLOWABLE SHIM STACK TO BE 1/4".
9) FOR ANCHORING INTO MASONRY/CONCRETE USE 1/4" CONCRETE ANCHOR WITH SUFFICIENT LENGTH TO ACHIEVE A 1 1/4" MINIMUM EMBEDMENT INTO SUBSTRATE WITH 2 1/2" MINIMUM EDGE DISTANCE. LOCATE ANCHORS AS SHOWN IN ELEVATIONS AND INSTALLATION DETAILS.
10) FOR ANCHORING INTO WOOD FRAMING OR 2X BUCK USE #12 WOOD SCREWS WITH SUFFICIENT LENGTH TO ACHIEVE A 1 5/8" MINIMUM EMBEDMENT INTO SUBSTRATE. LOCATE ANCHORS AS SHOWN IN ELEVATIONS AND INSTALLATION DETAILS.
11) FOR ANCHORING INTO METAL STRUCTURE USE #12 SMS OR SELF DRILLING SCREWS SCREWS WITH SUFFICIENT LENGTH TO ACHIEVE 3 THREADS MINIMUM BEYOND STRUCTURE INTERIOR WALL. LOCATE ANCHORS AS SHOWN IN ELEVATIONS AND INSTALLATION DETAILS.
12) ALL FASTENERS TO BE CORROSION RESISTANT.
13) INSTALLATION ANCHORS SHALL BE INSTALLED IN ACCORDANCE WITH ANCHOR MANUFACTURER'S INSTALLATION INSTRUCTIONS, AND ANCHORS SHALL NOT BE USED IN SUBSTRATES WITH STRENGTHS LESS THAN THE MINIMUM STRENGTH SPECIFIED BELOW:
    A. WOOD – MINIMUM SPECIFIC GRAVITY OF G=0.42
    B. CONCRETE – MINIMUM COMPRESSIVE STRENGTH OF 3,192 PSI.
    C. MASONRY – STRENGTH CONFORMANCE TO ASTM C–90, GRADE N, TYPE 1 (OR GREATER).
    D. METAL STRUCTURE: STEEL 18GA, 33KSI OR ALUMINUM 6063–T5 1/8" THICK MINIMUM

SIGNED: 07/25/11

TABLE OF CONTENTS

SHEET NO.	DESCRIPTION
1	ELEVATION, ANCHORING AND NOTES
2 – 3	INSTALLATION DETAILS
4	HARDWARE LOCATIONS AND COMPONENTS

WinDoor INCORPORATED
7500 AMSTERDAM DRIVE
ORLANDO, FL 32832
Phone: 407.481.8400
Fax: 407.481.0505
www.windoorinc.com

V101 uPVC TILT AND TURN
48 x 78
ELEVATION AND NOTES

DRAWN:	DWG NO.	REV
V.L.	08–01306	–

SCALE	DATE	SHEET
NTS	07/20/11	1 OF 4

STATE OF TEXAS
LUIS R. LOMAS
101889
LICENSED
PROFESSIONAL ENGINEER

Luis R. Lomas P.E.
TX No.: 101889

REVISIONS			
REV	DESCRIPTION	DATE	APPROVED

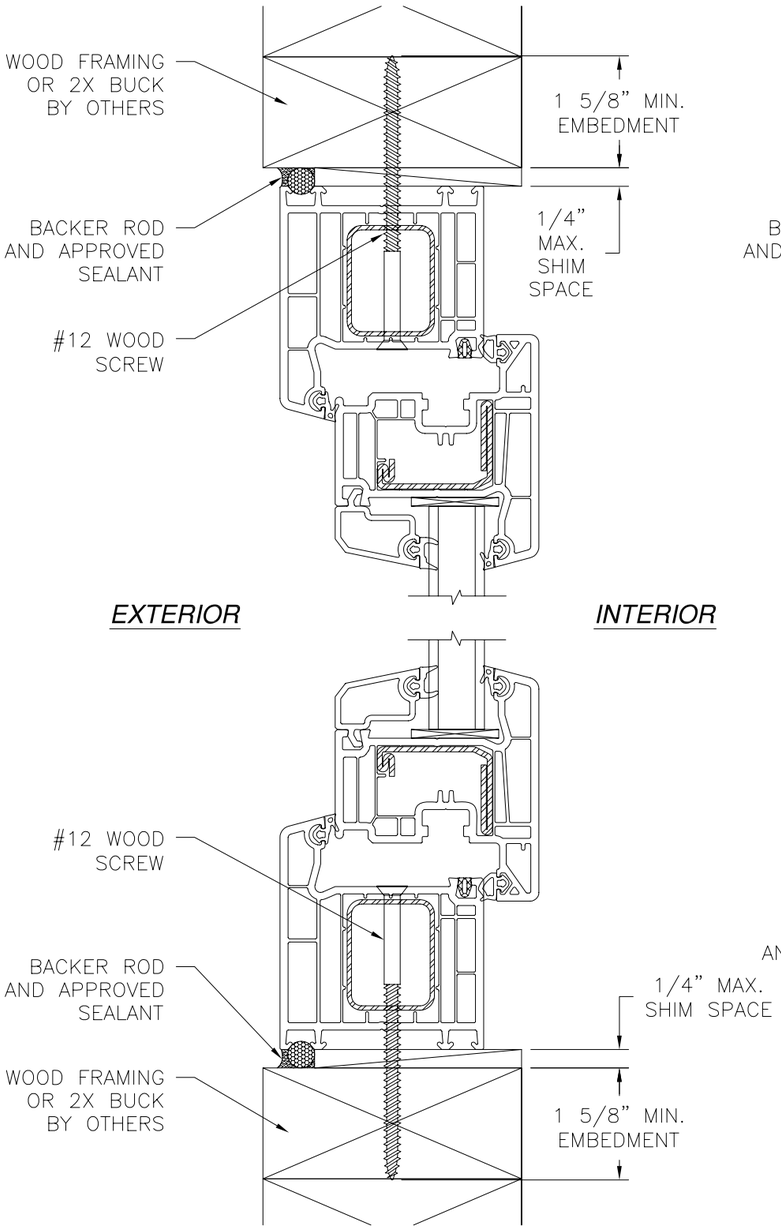

VERTICAL CROSS SECTION
WOOD FRAMING OR 2X BUCK INSTALLATION

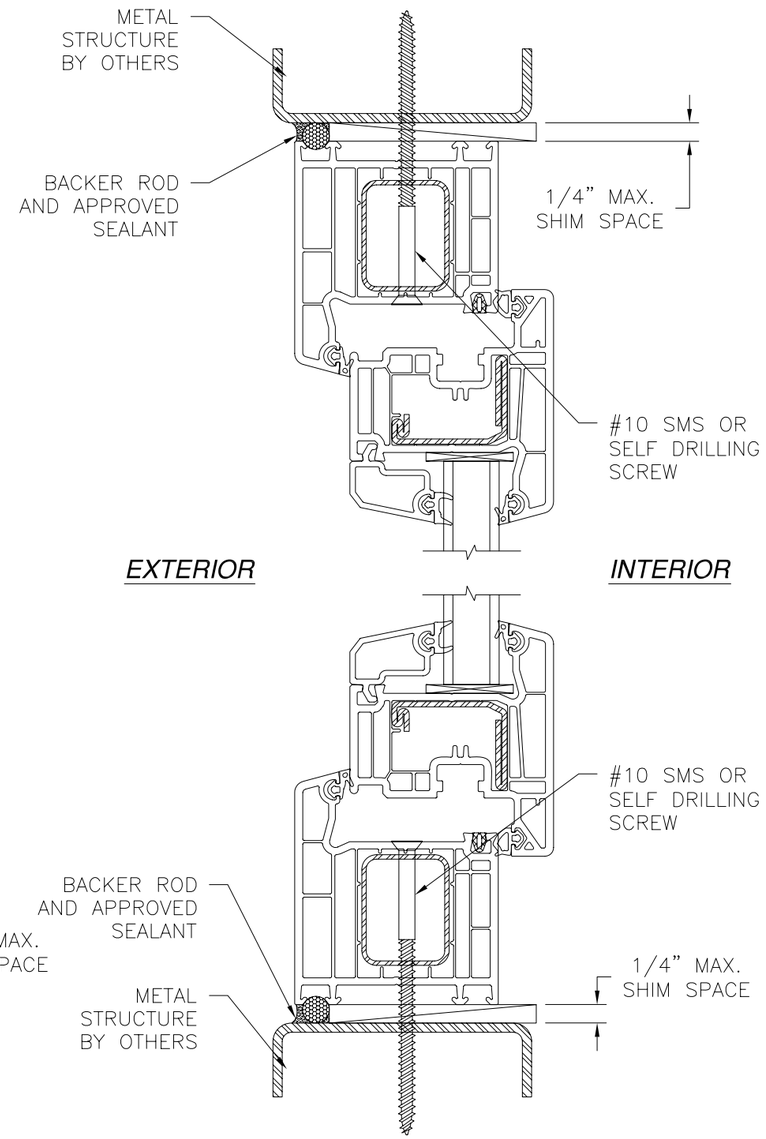

VERTICAL CROSS SECTION
METAL STRUCTURE INSTALLATION

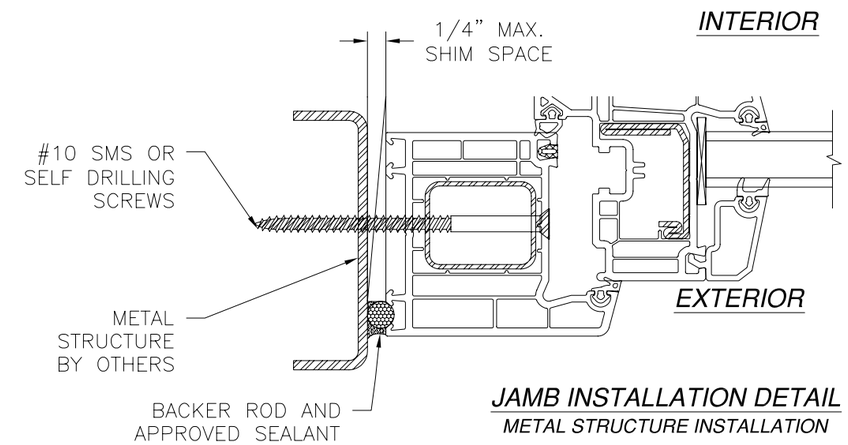

JAMB INSTALLATION DETAIL
METAL STRUCTURE INSTALLATION

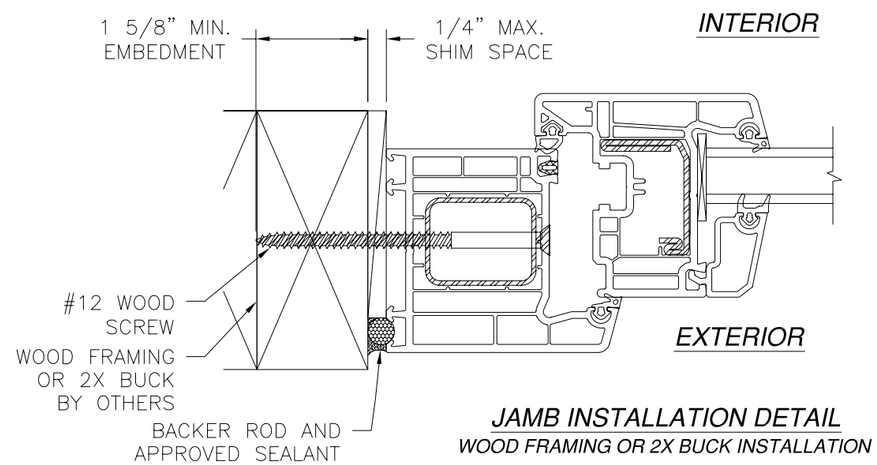

JAMB INSTALLATION DETAIL
WOOD FRAMING OR 2X BUCK INSTALLATION

NOTE: - SEALANT AND BACKER ROD MATERIAL AND JOINT DESIGN BY OTHERS.
- INTERIOR AND EXTERIOR FINISHES BY OTHERS OMITTED FOR CLARITY.

WinDoor INCORPORATED
7500 AMSTERDAM DRIVE
ORLANDO, FL 32832
Phone: 407.481.8400
Fax: 407.481.0505
www.windoorinc.com

V101 uPVC TILT AND TURN
48 x 78
INSTALLATION DETAILS

DRAWN:	DWG NO.	REV
V.L.	08-01306	–
SCALE NTS	DATE 07/20/11	SHEET 2 OF 4

STATE OF TEXAS
LUIS R. LOMAS
101889
LICENSED
PROFESSIONAL ENGINEER

Luis R. Lomas P.E.
TX No.: 101889

REVISIONS			
REV	DESCRIPTION	DATE	APPROVED

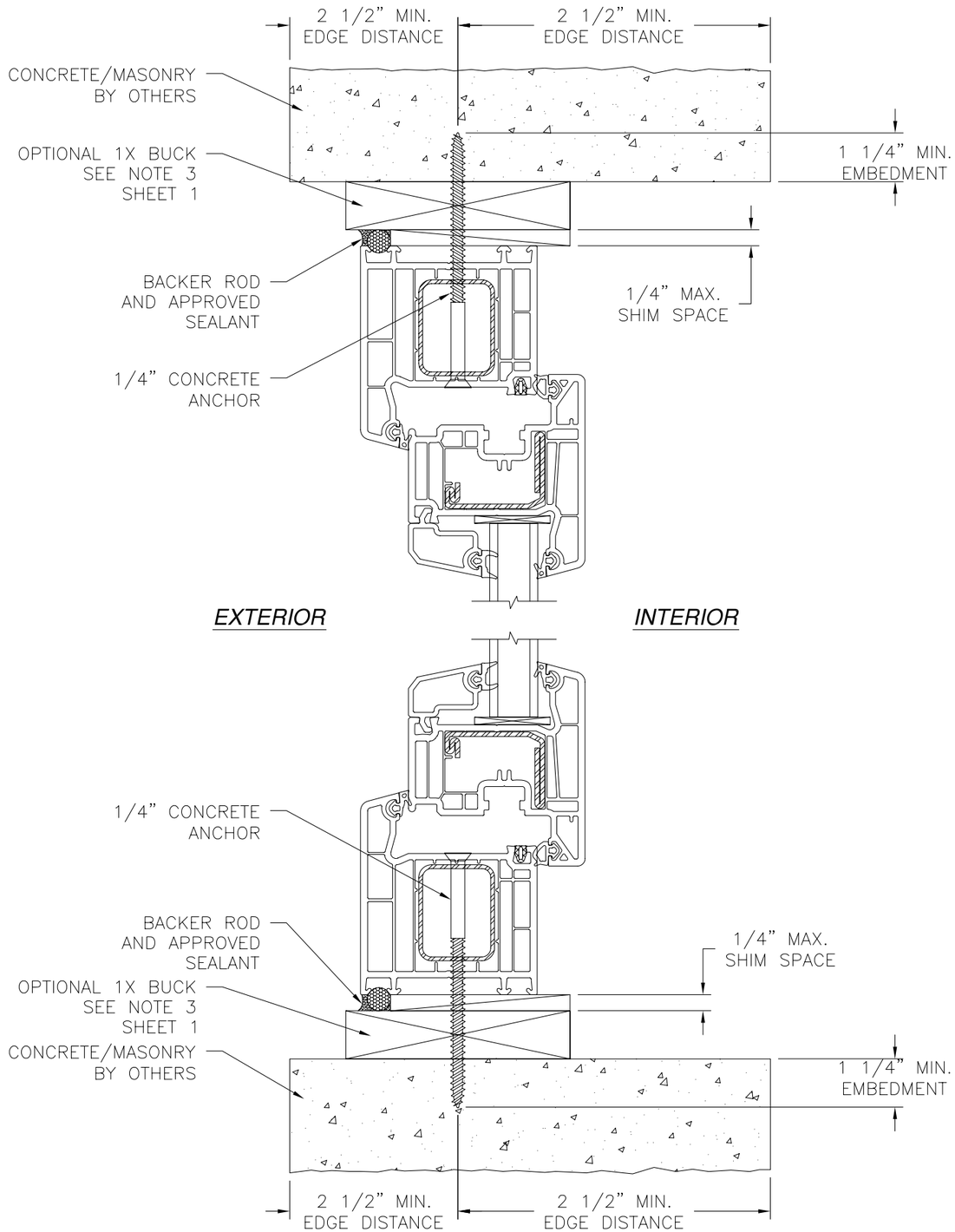

VERTICAL CROSS SECTION
CONCRETE/MASONRY INSTALLATION

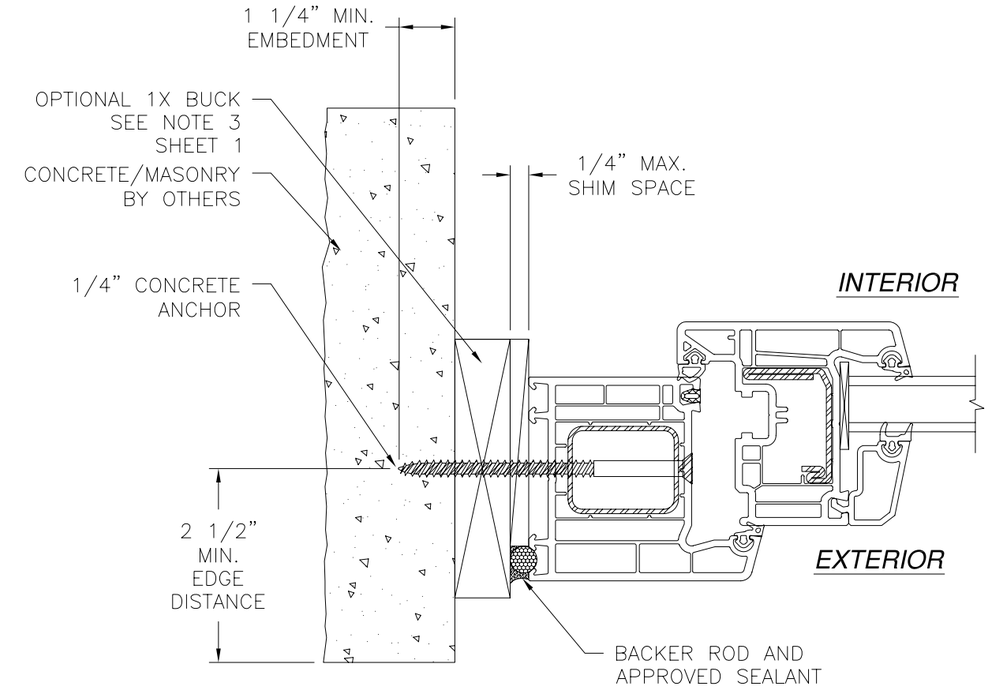

JAMB INSTALLATION DETAIL
CONCRETE/MASONRY INSTALLATION

NOTE: - SEALANT AND BACKER ROD MATERIAL AND JOINT DESIGN BY OTHERS.
- INTERIOR AND EXTERIOR FINISHES BY OTHERS OMITTED FOR CLARITY.

WinDoor INCORPORATED
7500 AMSTERDAM DRIVE
ORLANDO, FL 32832
Phone: 407.481.8400
Fax: 407.481.0505
www.windoorinc.com

V101 uPVC TILT AND TURN
48 x 78
INSTALLATION DETAILS

DRAWN:	DWG NO.	REV
V.L.	08-01306	–

SCALE	DATE	SHEET
NTS	07/20/11	3 OF 4

STATE OF TEXAS
LUIS R. LOMAS
101889
LICENSED
PROFESSIONAL ENGINEER

Luis R. Lomas P.E.
TX No.: 101889

REVISIONS			
REV	DESCRIPTION	DATE	APPROVED

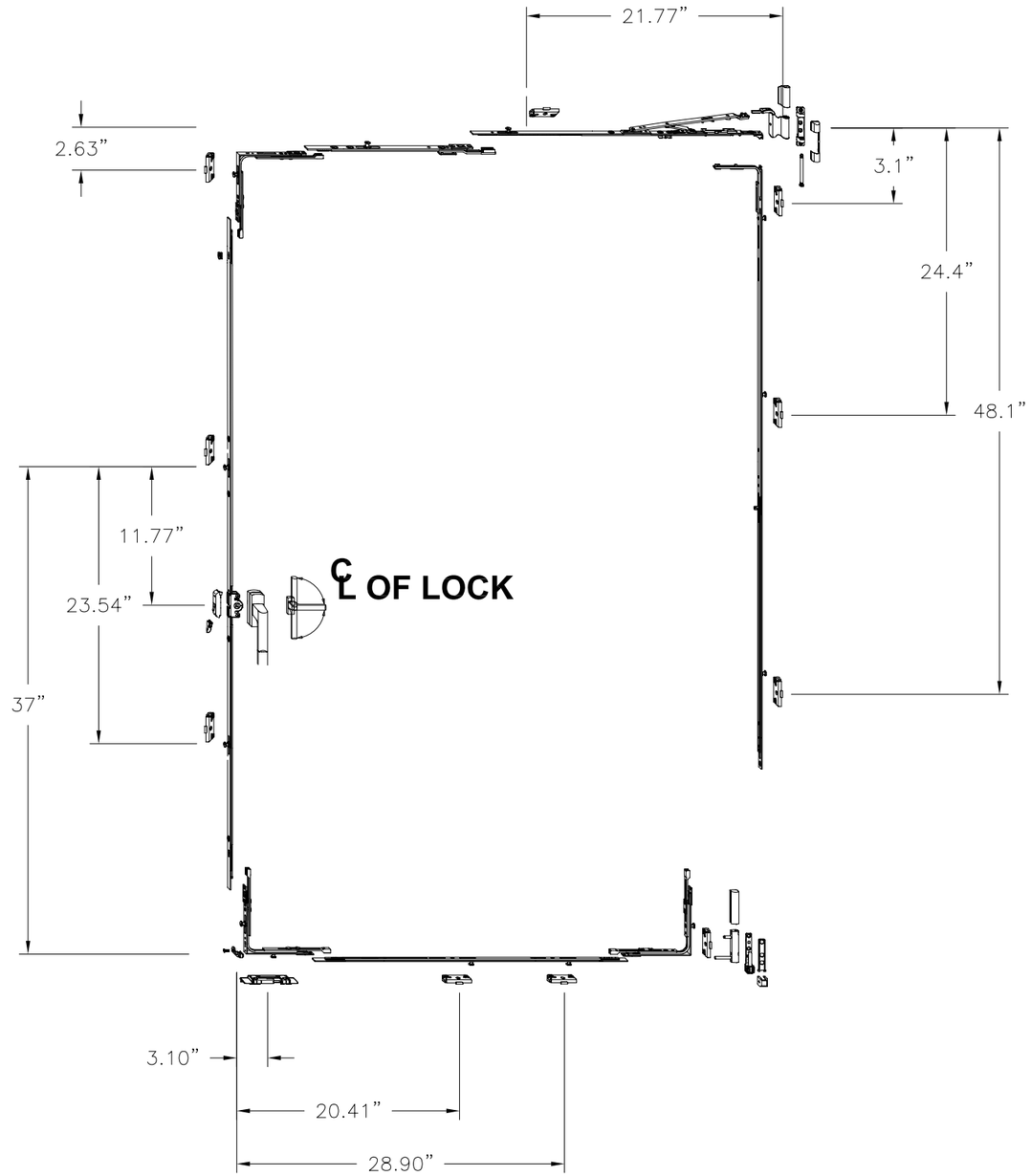

HARDWARE LOCATION
MULTI-POINT LOCKING SYSTEM

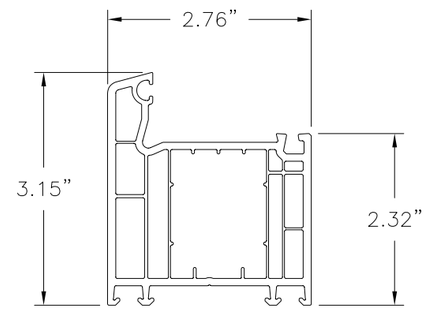

FRAME
RIGID PVC .110" THICK

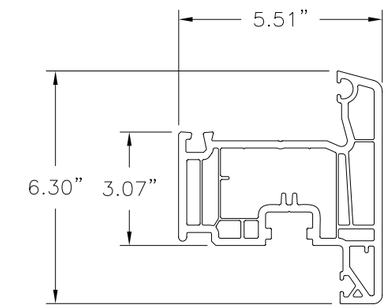

SASH
RIGID PVC .110" THICK

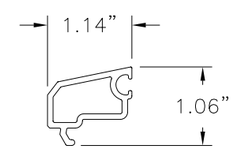

GLAZING BEAD
RIGID PVC .075" THICK

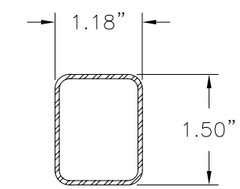

REINFORCEMENT
16GA G90 GALVANIZED STEEL

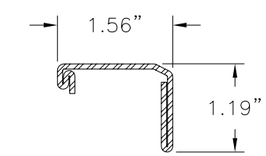

REINFORCEMENT
15GA G90 GALVANIZED STEEL

WinDoor INCORPORATED
7500 AMSTERDAM DRIVE
ORLANDO, FL 32832
Phone: 407.481.8400
Fax: 407.481.0505
www.windoorinc.com

V101 uPVC TILT AND TURN
48 x 78
HARDWARE LOCATIONS AND COMPONENTS

DRAWN:	DWG NO.	REV
V.L.	08-01306	–

SCALE	DATE	SHEET
NTS	07/20/11	4 OF 4

STATE OF TEXAS
LUIS R. LOMAS
101889
LICENSED
PROFESSIONAL ENGINEER

Luis R. Lomas P.E.
TX No.: 101889