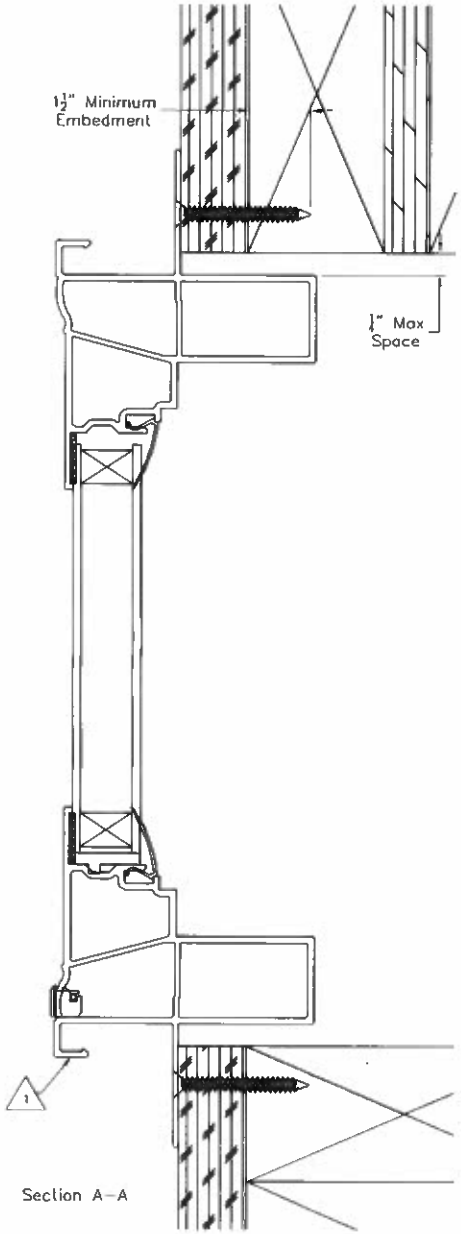

Section A–A

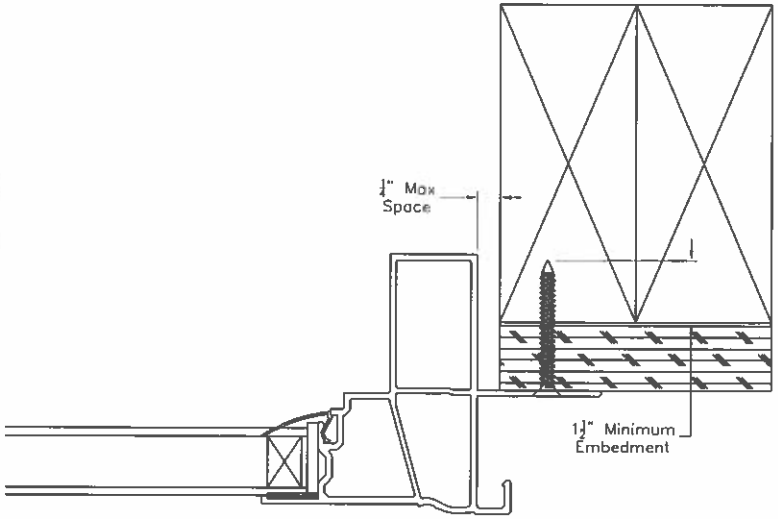

Section B–B

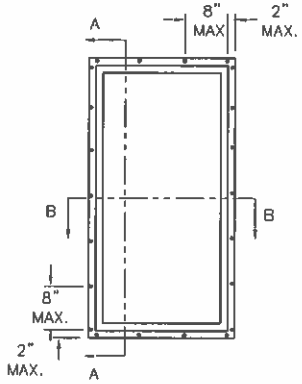

Elevation View

Table 1 – Verified Installations		
DP (psf)	WIDTH (in)	HEIGHT (in)
+/– 50	48	84
+/– 50	72	72
+/– 50	96	60

NOTES:

1. INSTALLATIONS SHOWN ON THIS DRAWING HAVE BEEN VERIFIED AS THE AS–TESTED INSTALLATION FOR THE PERFORMANCE LEVEL SHOWN. VERIFIED PRODUCTS ARE LISTED IN TABLE 1. THIS DRAWING APPLIES ONLY TO THOSE PRODUCTS.
2. INSTALLATION ANCHORS SHALL BE #8 SCREWS OF SUFFICIENT LENGTH TO ACHIEVE MINIMUM EMBEDMENT OF 1–1/2" INTO WOOD FRAMING MEMBER. SCREWS SHALL SATISFY NATIONAL DESIGN SPECIFICATION FOR MATERIAL PROPERTIES AND DIMENSIONS. PER NDS–2005 11.1.4.7, EDGE DISTANCES SHALL BE SUFFICIENT TO PREVENT SPLITTING.
3. WOOD FRAMING SHALL BE SPRUCE–PINE–FIR (G=0.42) OR DENSER.
4. INSTALLATION ANCHORS SHALL BE LOCATED WITHIN 1/2" OF THE SPECIFIED LOCATION.
5. MAXIMUM SHIM SPACE SHALL BE 1/4". SPACES GREATER THAN 1/16" REQUIRE THE USE OF LOAD BEARING SHIMS.
6. INSTALLATION ANCHORS ARE SHOWN GOING THROUGH EXTERIOR FINISH. ANCHORS MAY BE INSTALLED DIRECTLY INTO WOOD FRAMING MEMBER WITH 1–1/2" MINIMUM EMBEDMENT STILL REQUIRED.
7. INSTALLATION ANCHORS SHALL BE LOCATED 2" FROM CORNERS AND 8" MAXIMUM ON CENTER SPACING.
8. THESE INSTRUCTIONS ADDRESS STRUCTURAL REQUIREMENTS ONLY. WINDOWS SHALL BE INSTALLED PER ASTM E2112 OR FMA/AAMA 100.
9. SMALLER WINDOWS OF THE SAME CONSTRUCTION AND EQUAL OR LESSER DESIGN PRESSURES ARE COVERED BY THIS DRAWING.
10. GLAZING TYPE, GLASS TYPE, AND GLASS THICKNESS ARE ESTABLISHED BY THE CERTIFICATION. NOTE: WINDOWS FALLING UNDER THE 96X60 CERTIFICATION (WIDTH >72") REQUIRE THE USE OF 3/16" TEMPERED INSULATING GLASS.
11. PRODUCTS LISTED IN TABLE 1 ARE NOT IMPACT RESISTANT. IF USED IN WIND–BORNE DEBRIS REGIONS, APPROVED PROTECTION DEVICES ARE REQUIRED.
12. PRODUCT OR INSTALLATION IS NOT APPROVED FOR HIGH VELOCITY HURRICANE ZONE (HVHZ)

THIS DRAWING IS PROPRIETARY AND CONFIDENTIAL TO ATRIUM COMPANIES, INC. AND SHALL NOT BE REPRODUCED, COPIED, OR DISSEMINATED WITHOUT THE EXPRESSED WRITTEN PERMISSION OF ATRIUM COMPANIES, INC.

ATRIUM COMPANIES, INC.

Title: Atrium Series 85/120 Picture Window New Construction Installation Drawing

No.	Date	Revision Description	By	ECN #
1	3–27–10	Increased frame J-channel thickness. Changed weep gate.	CRA	2010–1750

Material (Type–Alloy–Temper): ----	Est. Area (in²): NA Est. Weight (lb/ft): NA	Tolerances: X.XX = ±X.XX X.XXX = ±X.XXX X.X° = ±X.X°	
Drawn By: CRA	Approved By: ---	Date: 9–16–2009	Scale: 3:4	Sheet Size: ANSI B
ECN# (Initial Issue): 2008–1369	File Name: ADW–05 85 120 PW ASSY		Sheet 1/1