OWENS CORNING™

INNOVATIONS FOR LIVING™

ONE OWENS CORNING PARKWAY
TOLEDO, OH 43659

OWENS CORNING TUBULAR SKYLIGHT "ILLUMINATOR" MODEL

"NON-IMPACT"

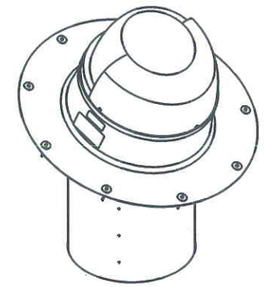

ILLUMINATOR 14" SPUN ALUMINUM (SHOWN)

MODEL NUMBER	DESIGN PRESSURE (PSF)	
	POSITIVE	NEGATIVE
ILLUMINATOR 10" SPUN ALUMINUM	+90.0	-90.0
ILLUMINATOR 14" SPUN ALUMINUM		

EVALUATED FOR USE IN THE STATE OF TEXAS

The Owens Corning Tubular Skylight described herein complies with the 2006 International Residential Code (IRC), Sections R308.6 and the 2006 International Building Code (IBC), Sections 1609, 2405, and 2610 (including Texas revisions) subject to the following conditions:

1. Anchors shall be as listed and spaced as shown in the details. Anchor embedment to base material shall be beyond roof covering.
2. When used in areas requiring wind-borne debris protection this product is required to be protected with an impact resistant covering that complies with Section R301.2.1.2 of the IRC and Section 1609.1.2 of the IBC.
3. Allowable design pressure requirements must be equal to or less than the design pressure rating shown in the design pressure charts, sheet 1 of this drawing.
4. Conditions not covered by this drawing are subject to further engineering analysis.

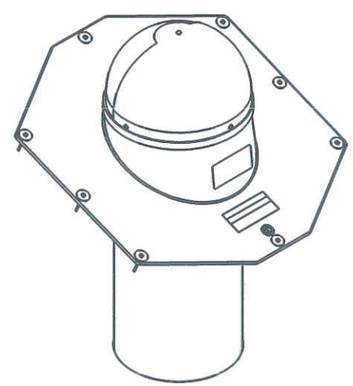

ILLUMINATOR 10" COMPOSITE (SHOWN)

MODEL NUMBER	DESIGN PRESSURE (PSF)	
	POSITIVE	NEGATIVE
ILLUMINATOR 10" COMPOSITE	+90.0	-90.0
ILLUMINATOR 14" COMPOSITE	+80.0	-80.0

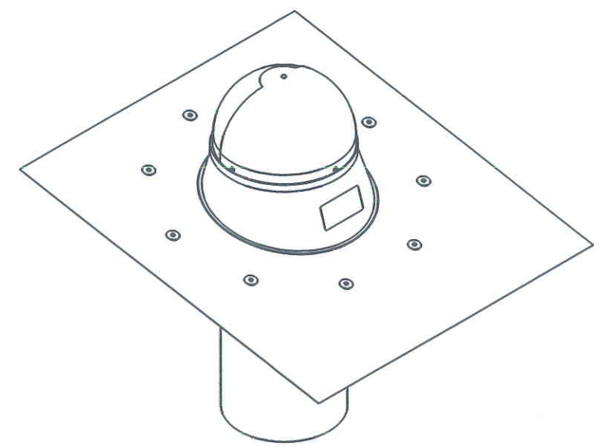

ILLUMINATOR 10" FORMABLE FLASHING (SHOWN)

MODEL NUMBER	DESIGN PRESSURE (PSF)	
	POSITIVE	NEGATIVE
ILLUMINATOR 10" FORMABLE FLASHING	+65.0	-65.0
ILLUMINATOR 14" FORMABLE FLASHING	+50.0	-50.0

TABLE OF CONTENTS

SHEET#	DESCRIPTION
1	Typical elevations, design pressures & general notes
2	Skylight details
3	Skylight details
4	Skylight details

Documents Prepared By: Lyndon F. Schmidt, P.E.
TEXAS P.E. #104123
RW BUILDING CONSULTANTS, INC.
P.O. Box 230 Valrico FL. 33595
Phone No.: 813.659.9197
TEXAS BOARD OF PROFESSIONAL ENGINEERS
CERTIFICATE OF REGISTRATION # F-11852

PRODUCT: OWENS CORNING TUBULAR SKYLIGHT

PART OR ASSEMBLY: TYPICAL ELEVATION, DESIGN PRESSURES & GENERAL NOTES

NO.	DATE	BY

REVISIONS

DATE: 01/04/12
SCALE: N.T.S.
DWG. BY: KV
CHK. BY: LFS
DRAWING NO.: TX-4136
SHEET 1 OF 4

© 2012 R.W. BUILDING CONSULTANTS INC.

R:\A - Projects\Project Folders\Proj 1601 - 1700\PF 1644\D. RWBC Drawings\Texas 2012\TX-4136-37.dwg, TX-4136

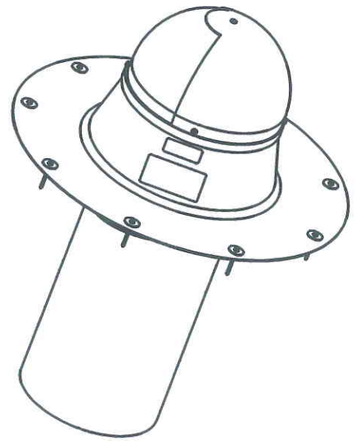

ILLUMINATOR 10" SPUN ALUMINUM

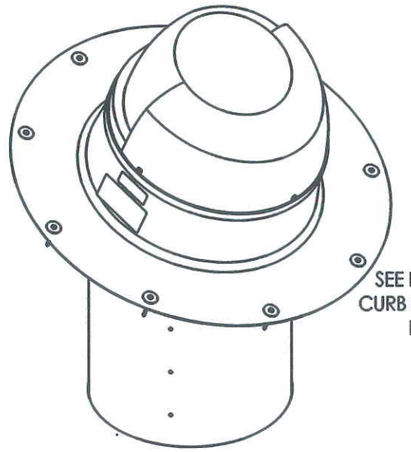

ILLUMINATOR 14" SPUN ALUMINUM

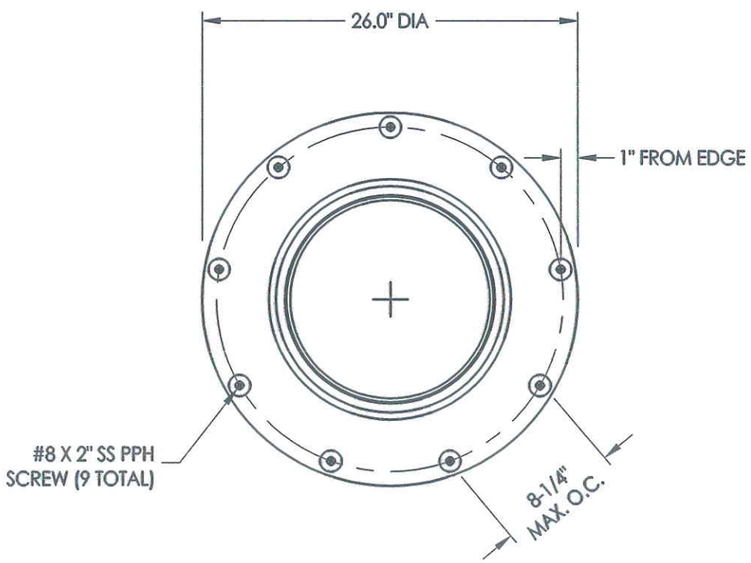

ANCHOR LOCATIONS

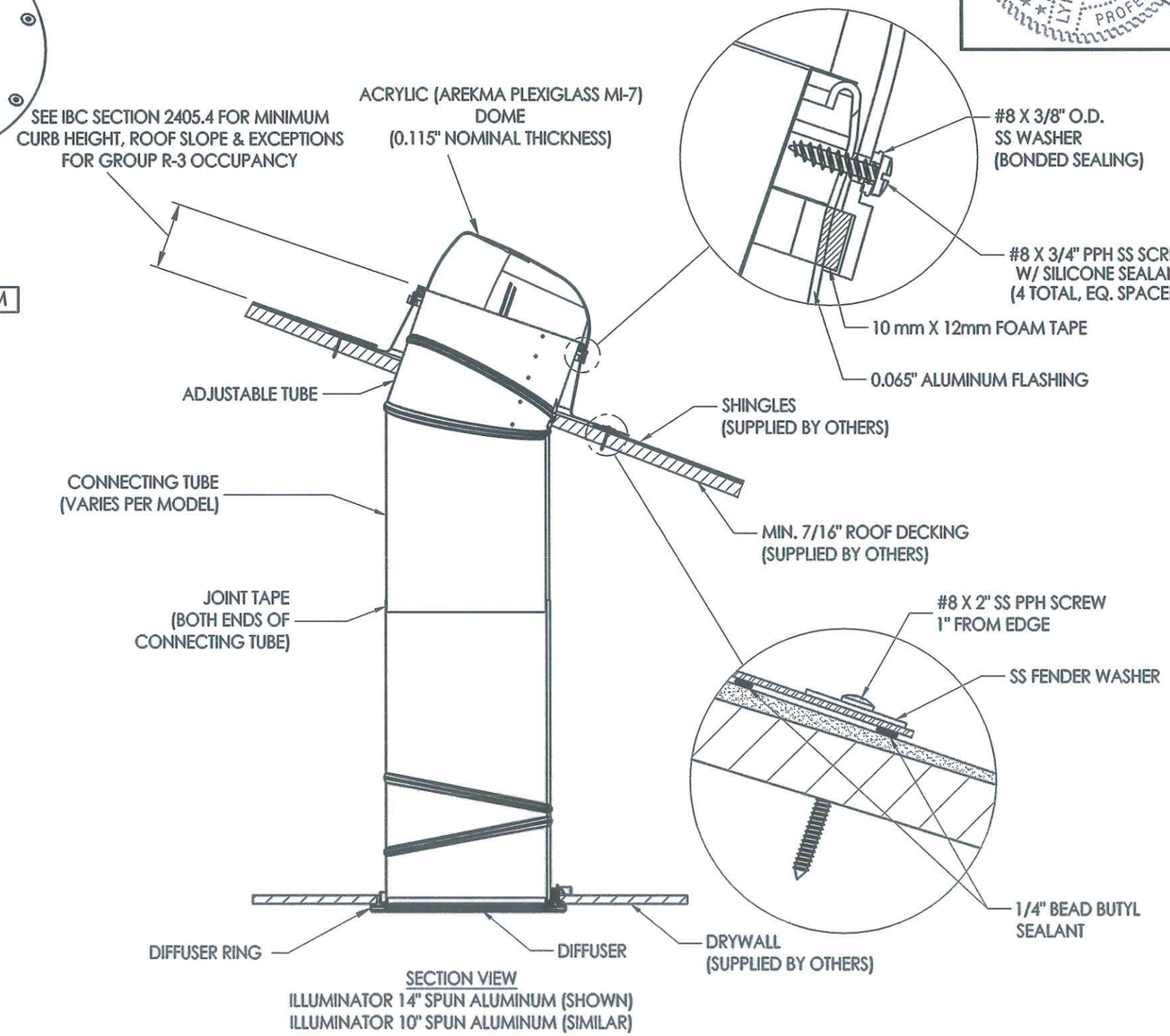

SECTION VIEW
ILLUMINATOR 14" SPUN ALUMINUM (SHOWN)
ILLUMINATOR 10" SPUN ALUMINUM (SIMILAR)

STATE OF TEXAS
LYNDON F. SCHMIDT
104123
LICENSED
PROFESSIONAL ENGINEER
4.17.12

Documents Prepared By: Lyndon F. Schmidt, P.E.
TEXAS P.E. #104123

RW BUILDING CONSULTANTS, INC.
P.O. Box 230 Valrico FL. 33595
Phone No.: 813.659.9197

TEXAS BOARD OF PROFESSIONAL ENGINEERS
CERTIFICATE OF REGISTRATION # F-11852

PRODUCT: OWENS CORNING TUBULAR SKYLIGHT

PART OR ASSEMBLY: SKYLIGHT DETAILS

NO.	DATE	REVISIONS	BY

DATE: 01/04/12
SCALE: N.T.S.
DWG. BY: KV
CHK. BY: LFS
DRAWING NO.: TX-4136
SHEET 2 OF 4

© 2012 R.W. BUILDING CONSULTANTS INC.

R:\A - Projects\Project Folders\Proj 1601 - 1700\PF 1644\D. RWBC Drawings\Texas 2012\TX-4136-37.dwg, 4136.2

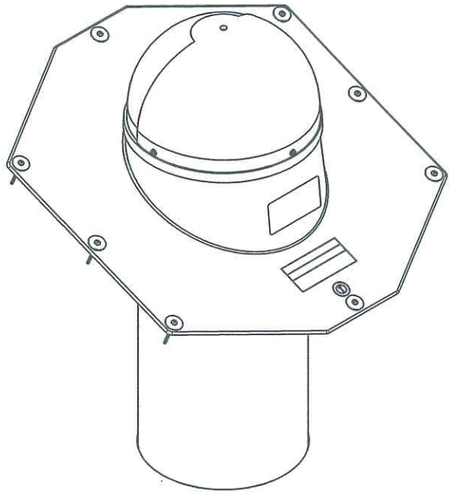

ILLUMINATOR 10" COMPOSITE

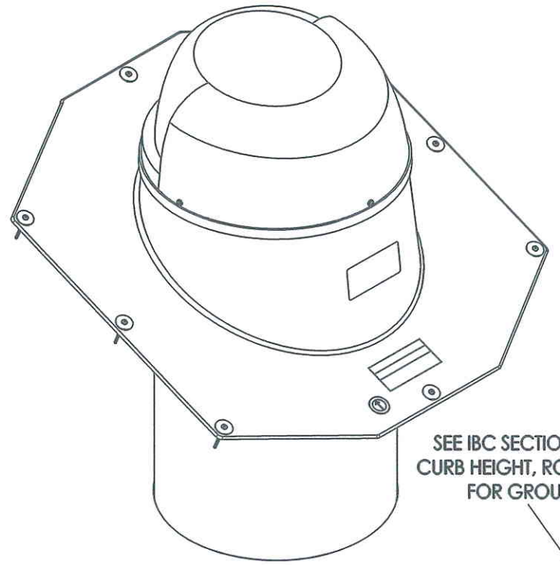

ILLUMINATOR 14" COMPOSITE

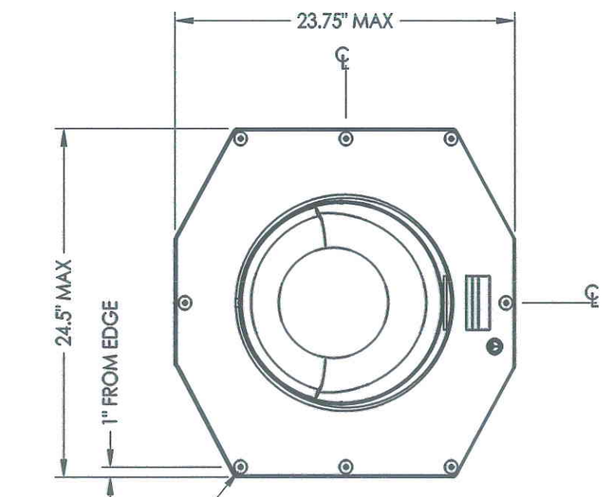

ANCHOR LOCATIONS

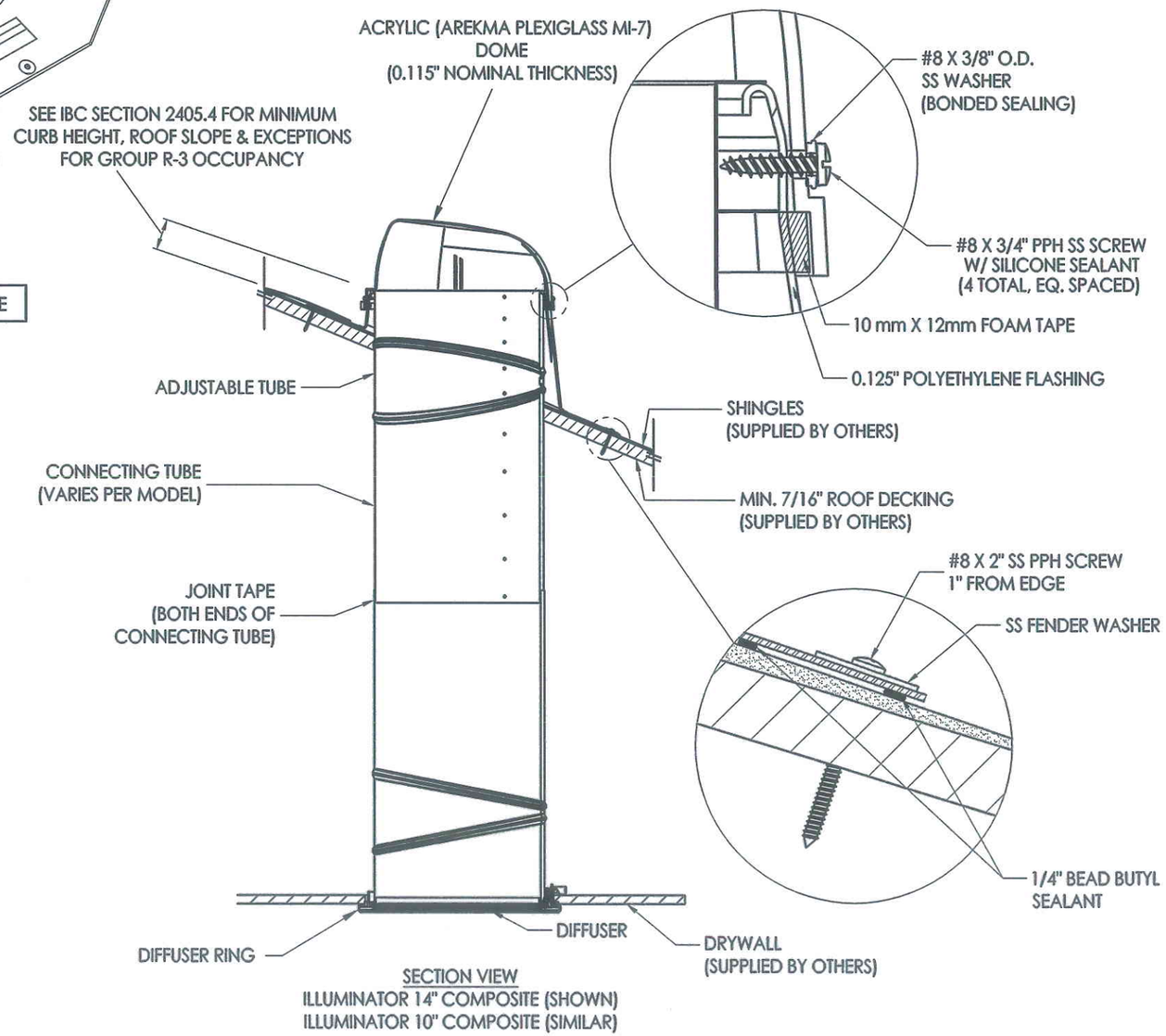

SECTION VIEW
ILLUMINATOR 14" COMPOSITE (SHOWN)
ILLUMINATOR 10" COMPOSITE (SIMILAR)

STATE OF TEXAS
LYNDON F. SCHMIDT
104123
LICENSED
PROFESSIONAL ENGINEER
4-17-12

Documents Prepared By: Lyndon F. Schmidt, P.E.
TEXAS P.E. #104123

RW BUILDING CONSULTANTS, INC.
P.O. Box 230 Valrico FL. 33595
Phone No.: 813.659.9197

TEXAS BOARD OF PROFESSIONAL ENGINEERS
CERTIFICATE OF REGISTRATION # F-11852

PRODUCT: OWENS CORNING TUBULAR SKYLIGHT

PART OR ASSEMBLY: SKYLIGHT DETAILS

NO.	DATE	REVISIONS	BY

DATE: 01/04/12
SCALE: N.T.S.
DWG. BY: KV
CHK. BY: LFS
DRAWING NO.: TX-4136
SHEET 3 OF 4

© 2012 R.W. BUILDING CONSULTANTS INC.

R:\A - Projects\Project Folders\Proj 1601 - 1700\PF 1644\D. RWBC Drawings\Texas 2012\TX-4136-37.dwg, 4136.3

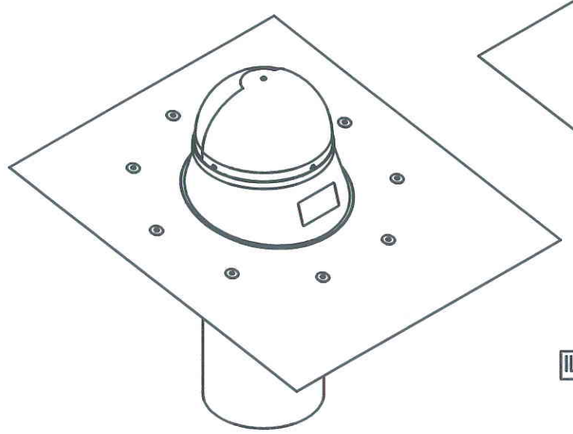

ILLUMINATOR 10" FORMABLE FLASHING

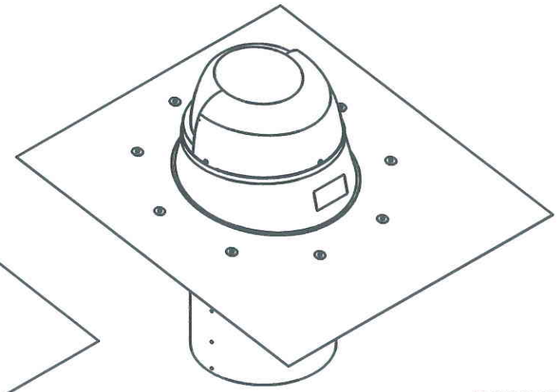

ILLUMINATOR 14" FORMABLE FLASHING

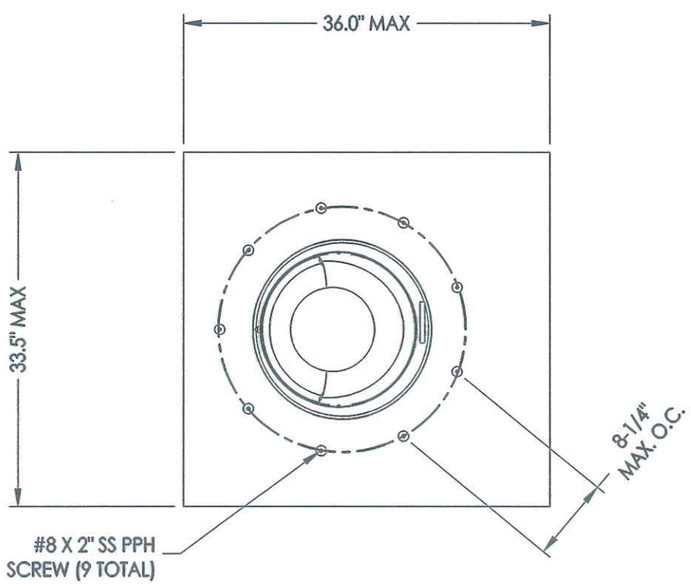

ANCHOR LOCATIONS

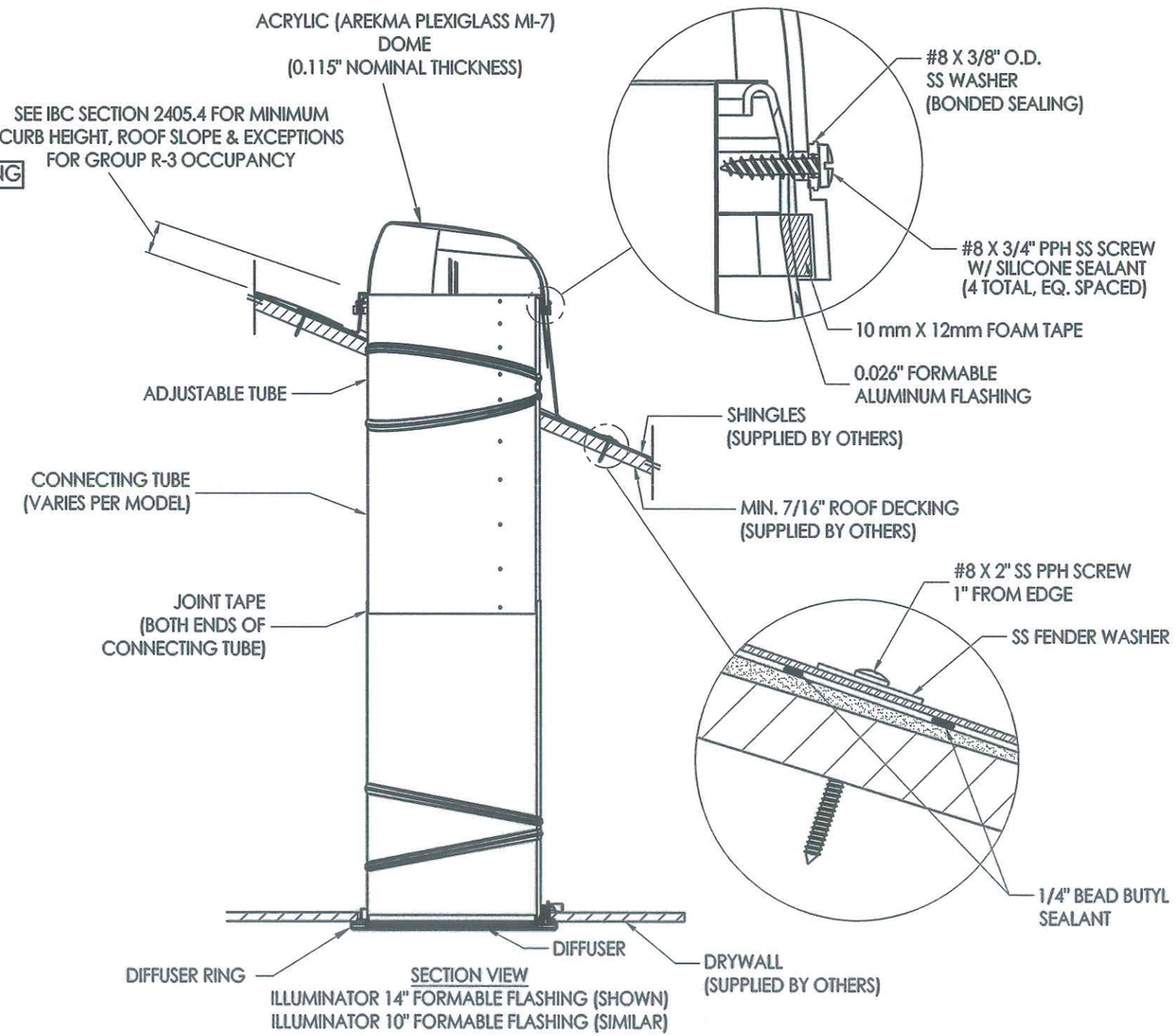

SECTION VIEW
ILLUMINATOR 14" FORMABLE FLASHING (SHOWN)
ILLUMINATOR 10" FORMABLE FLASHING (SIMILAR)

STATE OF TEXAS
LYNDON F. SCHMIDT
104123
LICENSED PROFESSIONAL ENGINEER
4-17-12

Documents Prepared By: Lyndon F. Schmidt, P.E.
TEXAS P.E. #104123
RW BUILDING CONSULTANTS, INC.
P.O. Box 230 Valrico FL. 33595
Phone No.: 813.659.9197
TEXAS BOARD OF PROFESSIONAL ENGINEERS
CERTIFICATE OF REGISTRATION # F-11852

PRODUCT: OWENS CORNING TUBULAR SKYLIGHT

PART OR ASSEMBLY: SKYLIGHT DETAILS

NO.	DATE	REVISIONS	BY

DATE: 01/04/12
SCALE: N.T.S.
DWG. BY: KV
CHK. BY: LFS
DRAWING NO.: TX-4136
SHEET 4 OF 4

© 2012 R.W. BUILDING CONSULTANTS INC.

R:\A - Projects\Project Folders\Proj 1601 - 1700\PF 1644\D. RWBC Drawings\Texas 2012\TX-4136-37.dwg, 4136.4