6.8 STREAMLINE SHUTTER

GENERAL NOTES:

1. THIS SYSTEM HAS BEEN TESTED AND EVALUATED IN ACCORDANCE WITH THE 2006 INTERNATIONAL BUILDING CODE WITH REVISIONS EFFECTIVE JANUARY 1, 2008, FOR USE WITHIN TEXAS INLAND ZONE II, INLAND ZONE I AND SEAWARD ZONES. THIS SYSTEM MEETS MISSILE LEVEL "D" AND INCLUDES ESSENTIAL FACILITIES AS DEFINED IN ASTM E1996-09. SEE PRODUCT EVALUATION REPORT FOR MORE INFORMATION.
2. POSITIVE AND NEGATIVE DESIGN PRESSURES CALCULATED FOR USE WITH THIS SYSTEM SHALL BE DETERMINED PER SEPARATE ENGINEERING IN ACCORDANCE WITH THE GOVERNING CODE. PRESSURE REQUIREMENTS AS DETERMINED IN ACCORDANCE WITH ASCE 7 AND AND SHALL BE LESS THAN OR EQUAL TO THE POSITIVE OR NEGATIVE DESIGN PRESSURE CAPACITY VALUES LISTED HEREIN FOR ANY ASSEMBLY AS SHOWN.
3. TESTING WAS CONDUCTED IN ACCORDANCE WITH ASTM E1886/E1996/E330.
4. DESIGN PRESSURES NOTED HEREIN ARE BASED ON MAXIMUM TESTED PRESSURES DIVIDED BY A 1.5 SAFETY FACTOR.
5. THIS SYSTEM HAS BEEN DESIGNED WITH NO SEPARATION FROM GLAZING REQUIRED FOR ALL WIND ZONES, IN ACCORDANCE WITH ASTM 1996-09. IT IS ACCEPTABLE BY CODE UNLESS OPTIONAL CRITERIA IS INDEPENDENTLY ADOPTED BY THE AUTHORITY HAVING JURISDICTION.
6. NO INCREASE IN ALLOWABLE STRESS HAS BEEN USED IN THE DESIGN OF THESE PRODUCTS. WIND LOAD DURATION FACTOR Cd = 1.6 WAS USED FOR WOOD ANCHOR DESIGN.
7. DETERMINE THE POSITIVE AND NEGATIVE DESIGN LOADS TO USE WHEN REFERENCING THESE DOCUMENTS IN ACCORDANCE WITH THE GOVERNING CODE AND GOVERNING WIND VELOCITY. FOR WIND LOAD CALCULATIONS IN ACCORDANCE WITH ASCE 7, A DIRECTIONALITY FACTOR OF Kd =0.85 SHALL BE USED.
8. THE SYSTEM DETAILED HEREIN IS GENERIC AND DOES NOT PROVIDE INFORMATION FOR A SPECIFIC SITE.
9. THESE INSTALLATION INSTRUCTIONS ARE PART OF A PRODUCT APPROVAL EVALUATION AND SHALL ONLY BE USED IN CONJUNCTION WITH THE EVALUATION REPORT SUBMITTED FOR THE SAME PRODUCT APPROVAL.
10. THESE APPROVAL DOCUMENTS ARE SUITABLE TO BE APPLIED BY THE CONTRACTOR PROVIDED THE CONTRACTOR DOES NOT DEVIATE FROM THE CONDITIONS DETAILED HEREIN AND THE CONTRACTOR VERIFIES THAT THE EXISTING STRUCTURE DOES NOT DEVIATE IN EITHER FORM OR MATERIAL FROM THE STRUCTURAL SUBSTRATES DETAILED HEREIN.
11. ANY MODIFICATIONS OR ADDITIONS TO THESE APPROVAL DOCUMENTS WILL VOID THE APPROVAL DOCUMENTS.
12. WHEN THE SITE CONDITIONS DEVIATE FROM THESE APPROVAL DOCUMENTS, THE BUILDING OFFICIAL MAY REQUIRE THAT SITE SPECIFIC DOCUMENTS BE PREPARED, SIGNED, DATED AND SEALED BY A LICENSED ENGINEER OR REGISTERED ARCHITECT, WHICH DETAIL AND JUSTIFY THE DEVIATION,. AS A CONDITION TO THE BUILDING OFFICIAL GRANTING HIS/HER APPROVAL.
13. EACH SHUTTER ASSEMBLY SHALL BE PERMANENTLY LABELED WITH THE FOLLOWING MINIMUM INFORMATION:

    TOWN & COUNTRY INDUSTRIES
    FORT LAUDERDALE, FL
    MISSILE LEVEL D - ASTM E1886, E1996 & E330
    TDI SHU#

14. ALL EXTRUSIONS SHOWN SHALL BE 6063-T6 ALUMINUM ALLOY, U.O.N., WITH A MINIMUM Fy OF 25 K.S.I.
15. ALL BOLTS AND WASHERS (EXCLUDING INSTALLATION) SHALL BE STAINLESS STEEL WITH A MINIMUM TENSILE STRENGTH OF 60 K.S.I., U.O.N. POP RIVETS SHALL BE 1/4"Ø OR 3/16"Ø 5052 ALUM. ALLOY.
16. ALL SHUTTERS SHALL HAVE A LOCKING MECHANISM CONSISTING OF THUMBSCREW, PUSH LOCK OR BOX LOCK AT CENTER OR SIDE CLOSURE.
17. TOP AND BOTTOM DETAILS MAY BE INTERCHANGED AS FIELD CONDITIONS REQUIRE.
18. FLOOR TRACKS MAY BE REMOVABLE AT NON-STACKING LOCATIONS. USE REMOVABLE ANCHORS.
19. MOUNTING EXTRUSIONS MAY BE BENT TO FORM A CURVE WITH A MIN. RADIUS OF 10".
20. ALL DIMENSIONS SHOWN INCLUDE POWDER COATING FINISH.
21. ALL STEEL IN CONTACT WITH ALUMINUM SHALL BE PAINTED OR PLATED.
22. SHUTTER MAY BE INSTALLED WITH UP TO (2) ADDITIONAL BLADES OF SLACK.
23. SEALANT SHALL BE USED ON ANCHORS OR TRACKS WHEREVER WATER SEEPAGE IS POSSIBLE.

TABLE 1:

ACCORDION SHUTTER SPAN SCHEDULE

SHUTTER SPAN	POSITIVE DESIGN PRESSURE (PSF)	NEGATIVE DESIGN PRESSURE (PSF)
72"	100	100
99"	70	70
120"	53	53
144"	43	40

TABLE 1 NOTES:
1. DESIGN PRESSURES SHOWN IN "ACCORDION SHUTTER SPAN SCHEDULE" ABOVE ARE MAXIMUM ALLOWABLE DESIGN PRESSURES AT EACH RESPECTIVE SHUTTER SPAN.
2. LINEAR INTERPOLATION BETWEEN SHUTTER SPANS IS NOT PERMITTED. FOR SPANS BETWEEN THOSE INDICATED ABOVE, THE DESIGN PRESSURES FOR THE NEXT HIGHER SPAN SHALL BE USED.

eyewall™ Armor
HURRICANE PROTECTION

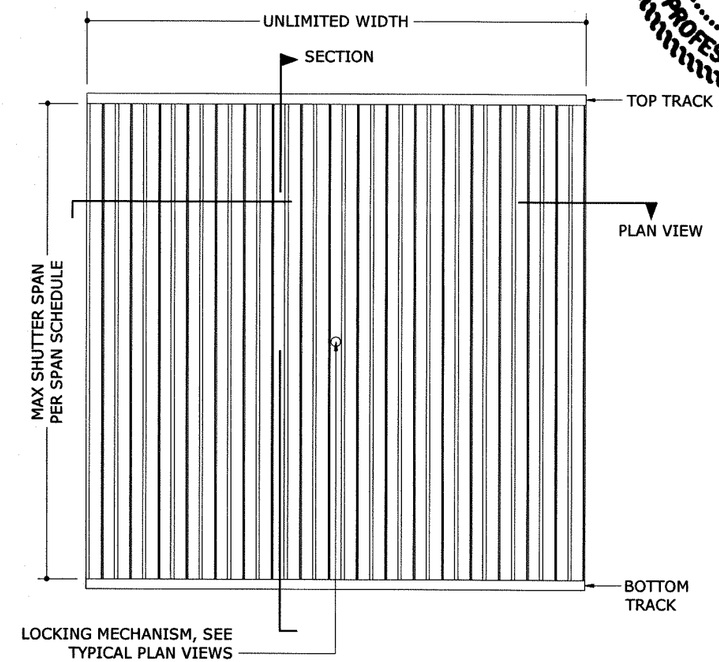

1 / 1 TYPICAL ACCORDION SHUTTER ELEVATION
N.T.S. EXTERIOR ELEV

TABLE 2:

MINIMUM SEPARATION FROM GLASS

SHUTTER SPAN	ESSENTIAL FACILITIES	
	INSTALLATIONS ≤ 30' ABOVE GRADE	INSTALLATIONS > 30' ABOVE GRADE
72"	2-3/8"	1-5/8"
99"	3-5/8"	1-7/8"
120"	4-1/4"	2"
144"	5"	2"

TABLE 2 NOTES:
1. **NO SEPARATION FROM GLASS IS REQUIRED FOR INSTALLATIONS IN WIND ZONES 1 THROUGH 4 PROVIDED THAT SHUTTER HAS A MINIMUM SPAN OF AT LEAST 30".**
2. INSTALLATIONS IN WIND ZONES 1 THROUGH 4 WITH SPANS LESS THAN 30" SHALL HAVE 2-7/8" MINIMUM SEPARATION FROM GLASS WHEN ≤ 30' ABOVE GRADE, AND 1-5/8" WHEN > 30' ABOVE GRADE.
3. LINEAR INTERPOLATION BETWEEN SHUTTER SPANS IS NOT PERMITTED. FOR SPANS BETWEEN THOSE INDICATED ABOVE, THE SEPARATION FROM GLASS FOR THE NEXT HIGHER SPAN SHALL BE USED.
4. SEPARATION FOR GLASS HAS BEEN DETERMINED IN ACCORDANCE WITH ASTM E1996-09.

STATE OF TEXAS
FRANK L. BENNARDO P.E.
PE96064
01/03/2019
FRANK L. BENNARDO
96064
LICENSED
PROFESSIONAL ENGINEER

ENGINEERING EXPRESS
CORPORATE OFFICE
160 SW 12th AVE, SUITE 206
DEERFIELD BEACH, FL 33442
P: (954) 354-0660 F: (954) 354-0443
E: HELLO@ENGINEERINGEXPRESS.COM
ENGINEERINGEXPRESS.COM
CERT OF AUTH #F-11383

Town & Country INDUSTRIES
Wholesale Aluminum and Building Products
A Division of ABC Supply Co., Inc.
400 WEST MCNAB ROAD
FT. LAUDERDALE, FL 33309

REMARKS	DRWN	CHKD	DATE
INIT ISSUE	KL	FLB	01/24/18

THIS DOCUMENT IS THE PROPERTY OF FRANK L. BENNARDO, P.E. AND SHALL NOT BE REPRODUCED IN WHOLE OR PART WITHOUT WRITTEN CONSENT OF FRANK L. BENNARDO, P.E. - ALTERATIONS, ADDITIONS, HIGHLIGHTING, OR OTHER MARKINGS TO THIS DOCUMENT ARE NOT PERMITTED AND INVALIDATE OUR CERTIFICATION.

COPYRIGHT FRANK L. BENNARDO P.E.

15-2339

SCALE: -

PAGE DESCRIPTION:
-
-

01/03/2019 - 9:05am rickn V:\projects\15-2339 6.8 Streamline - FSA - Update FL13757.2 for 2014 Florida Bldg Code-Project\WP\TDI Submittal\15-2339d-Dwg-TDI.dwg

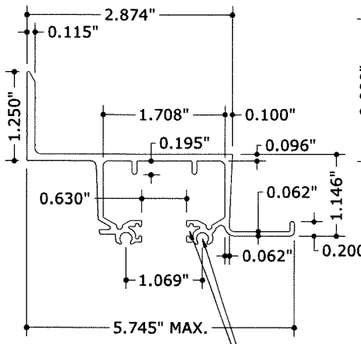

1 WALL
SCALE: HALF SIZE

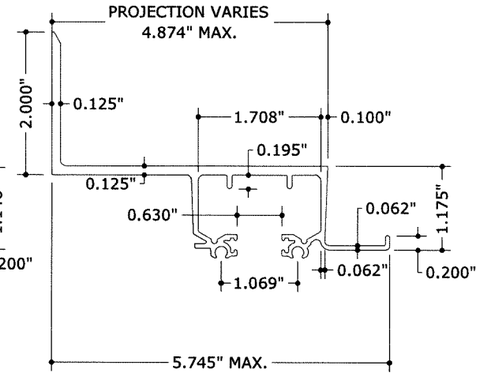

2 BUILD OUT WALL
SCALE: HALF SIZE

WHERE SHOWN, SCREW BOSSES & FELT GROVES ARE OPTIONAL ON ALL EXTRUSIONS

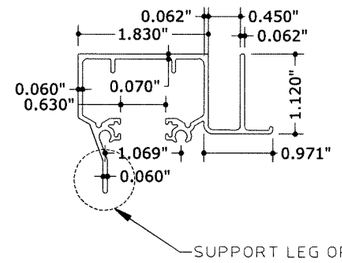

3 STREAMLINE CEILING TRACK
SCALE: HALF SIZE

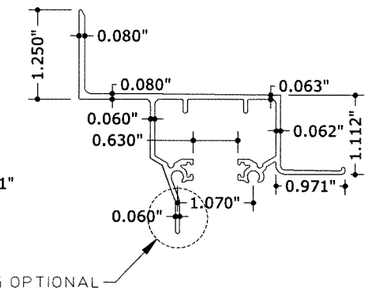

4 STREAMLINE WALL TRACK
SCALE: HALF SIZE

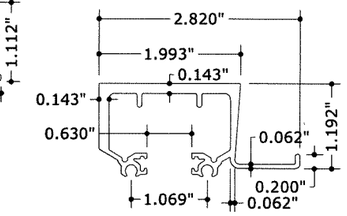

5 HEAVY HEADER/SILL
SCALE: HALF SIZE

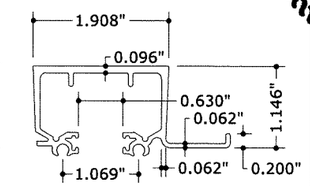

6 LITE HEADER/SILL
SCALE: HALF SIZE

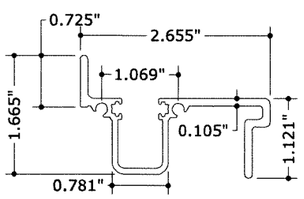

7 SILL
SCALE: HALF SIZE

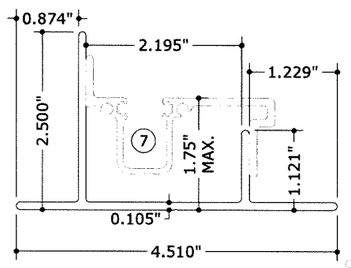

8 SILL ADAPTER
SCALE: HALF SIZE

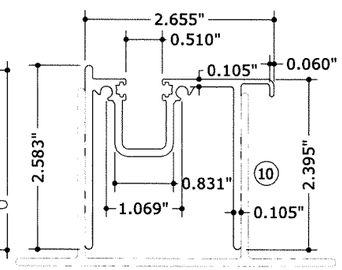

9 EXTENDED SILL
SCALE: HALF SIZE

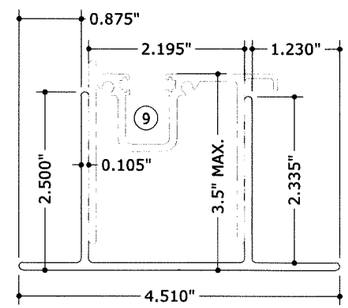

10 EXTENDED SILL ADAPTOR
SCALE: HALF SIZE

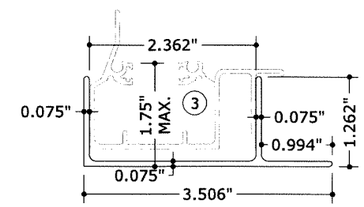

11 ADJUSTABLE SILL BOTTOM
SCALE: HALF SIZE

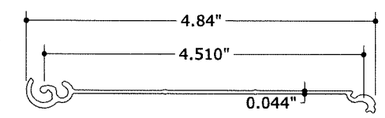

NOTE: TESTED THICKNESS OF BARE METAL W/O PAINT IS 0.039"

13 6.8 STREAMLINE SLAT/BLADE
SCALE: HALF SIZE

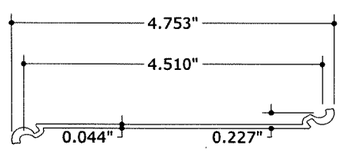

NOTE: THICKNESS OF BARE METAL W/O PAINT IS 0.039"

15 6.8 STREAMLINE STACK
SCALE: HALF SIZE

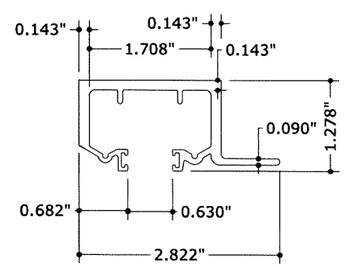

16 RADIUS CEILING HEADER/SILL
SCALE: HALF SIZE

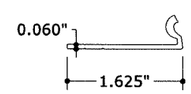

17 6.8 STARTER
SCALE: HALF SIZE

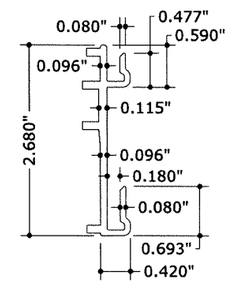

18a WALL SILL CLIP
SCALE: HALF SIZE

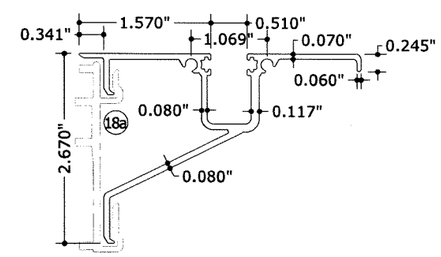

18b WALL SILL
SCALE: HALF SIZE

STATE OF TEXAS
FRANK L. BENNARDO
PE96064
01/03/2019
FRANK L. BENNARDO
96064
LICENSED
PROFESSIONAL ENGINEER

ENGINEERING EXPRESS, INC.
CORPORATE OFFICE
160 SW 12th AVE, SUITE 126
DEERFIELD BEACH, FL 33442
P: (954) 354-0660 F: (954) 354-0445
E: HELLO@ENGINEERINGEXPRESS.COM
ENGINEERINGEXPRESS.COM
CERT OF AUTH #F-11383

Town & Country INDUSTRIES
Wholesale Aluminum and Building Products
A Division of ABC Supply Co., Inc.
400 WEST MCNAB ROAD
FT. LAUDERDALE, FL 33309

REMARKS	DRWN	CHKD	DATE
INIT ISSUE	KL	FLB	01/24/18
-	-	-	-
-	-	-	-
-	-	-	-

THIS DOCUMENT IS THE PROPERTY OF FRANK L. BENNARDO, P.E. AND SHALL NOT BE REPRODUCED IN WHOLE OR PART WITHOUT WRITTEN CONSENT OF FRANK L. BENNARDO, P.E. ** ALTERATIONS, ADDITIONS, HIGHLIGHTING, OR OTHER MARKINGS TO THIS DOCUMENT ARE NOT PERMITTED AND INVALIDATE EOR CERTIFICATION.

COPYRIGHT FRANK L. BENNARDO P.E.

15-2339

SCALE: - -

PAGE DESCRIPTION:
-
-

V:\projects\15-2339 6.8 Streamline - FSA - Update FL13757.2 for 2014 Florida Bldg Code-Project\WP\TDI Submittal\15-2339d-Dwg-TDI.dwg
01/03/2019 - 9:05am rickn

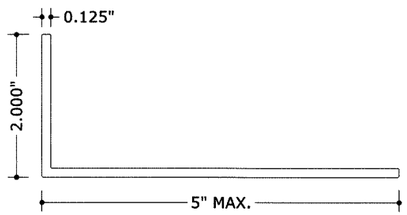

19 ANGLE
SCALE: HALF SIZE

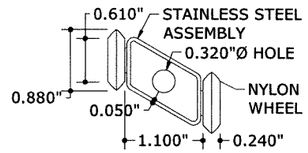

TYP. AT EVERY OTHER INSIDE JOINT AT TOP.

22 ROLLER ASSEMBLY
SCALE: HALF SIZE

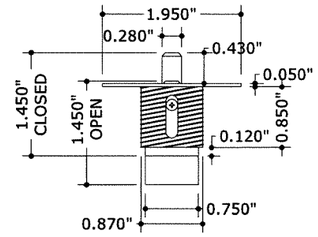

CYLINDER-SOLID BRASS, NICKEL PLATED HOUSING-ZINC DICAST,POWDER COATED

NOTE: MAY BE KEY OPERATED OUTSIDE OR KEY/THUMB TURN OPERATED INSIDE.

23 BRASS PUSH LOCK
SCALE: HALF SIZE

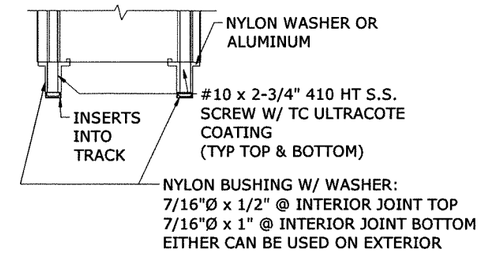

24 BUSHING ASSEMBLY DETAIL
SCALE: HALF SIZE

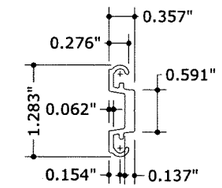

26 BOX CENTER INSERT
SCALE: HALF SIZE

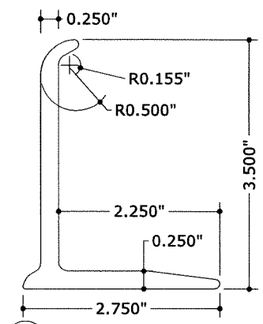

27 RAINGUARD
SCALE: HALF SIZE

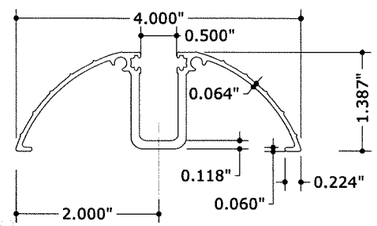

28 DECORATIVE FLOOR TRACK
SCALE: HALF SIZE

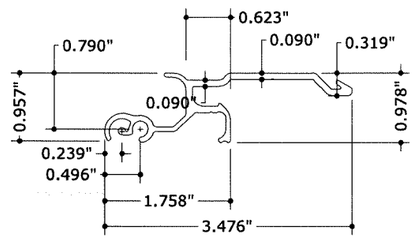

30 UNIMATE LOCK
SCALE: HALF SIZE

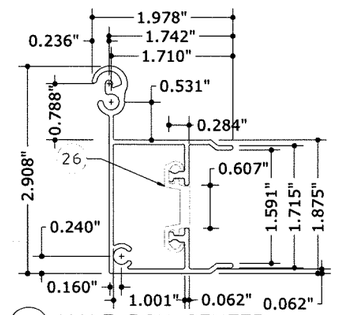

31 MALE BOX CENTER
SCALE: HALF SIZE

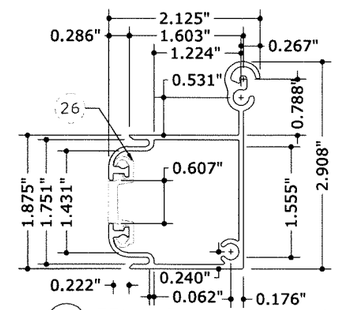

32 FEMALE BOX CENTER
SCALE: HALF SIZE

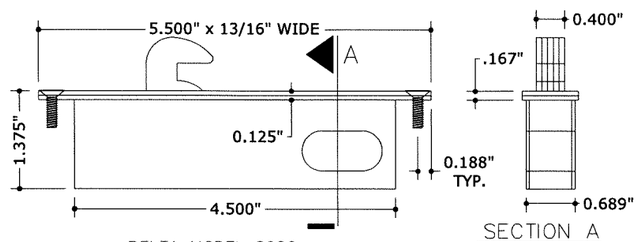

DELTA MODEL 2022
INDUSTRIAL SYSTEMS

35 BOX LOCK
SCALE: HALF SIZE

SECTION A

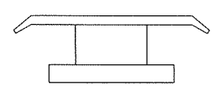

POWDER COATED, ZINC DIE-CAST

36 T-LOCK ADAPTER (OPTIONAL)
SCALE: HALF SIZE

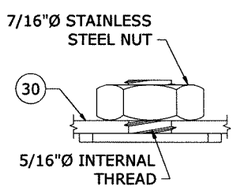

37 T-SCREW INSERT
SCALE: FULL SIZE

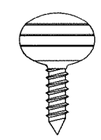

5/16-18x1 MACHINE SCREW
STAINLESS STEEL

HEAD STYLE VARIES

38 THUMB SCREW
SCALE: FULL SIZE

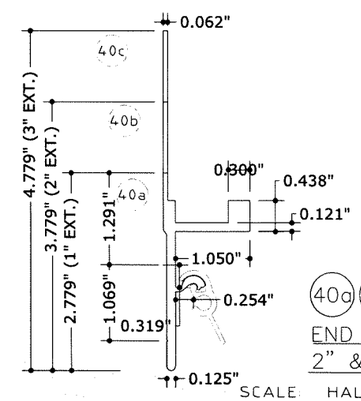

40a 40b 40c
END STRIP 1" 2" & 3" EXT
SCALE: HALF SIZE

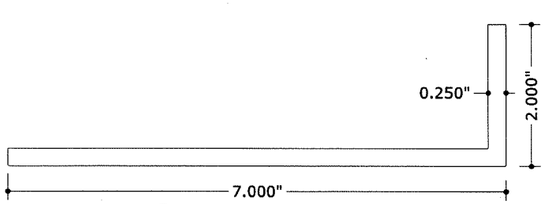

39 2X7 ANGLE
SCALE: HALF SIZE

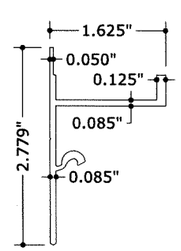

20 ALT. 1" END STRIP
SCALE: HALF SIZE

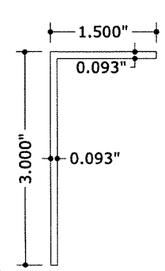

21 1.5"x3"x0.093" ANGLE
SCALE: HALF SIZE

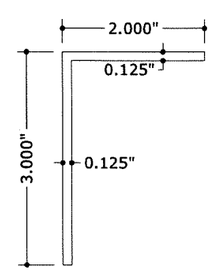

25 2"x3"x0.125" ANGLE
SCALE: HALF SIZE

FRANK L. BENNARDO, P.E.
96064
01/03/2019
STATE OF TEXAS
FRANK L. BENNARDO
96064
LICENSED
PROFESSIONAL ENGINEER
ENGINEERING EXPRESS, INC.
CORPORATE OFFICE
160 SW 12th AVE, SUITE 106
DEERFIELD BEACH, FL 33442
P: (954) 354-0660 F: (954) 354-0443
E: HELLO@ENGINEERINGEXPRESS.COM
ENGINEERINGEXPRESS.COM
CERT OF AUTH #F-11383

Town & Country INDUSTRIES
Wholesale Aluminum and Building Products
A Division of ABC Supply Co., Inc.
400 WEST MCNAB ROAD
FT. LAUDERDALE, FL 33309

REMARKS	DRWN	CHKD	DATE
INIT ISSUE	KL	FLB	01/24/18
-	-	-	-
-	-	-	-
-	-	-	-

THIS DOCUMENT IS THE PROPERTY OF FRANK L. BENNARDO, P.E. AND SHALL NOT BE REPRODUCED IN WHOLE OR PART WITHOUT WRITTEN CONSENT OF FRANK L. BENNARDO, P.E. ~ ALTERATIONS, ADDITIONS, HIGHLIGHTING, OR OTHER MARKINGS TO THIS DOCUMENT ARE NOT PERMITTED AND INVALIDATE OUR CERTIFICATION.

COPYRIGHT FRANK L. BENNARDO P.E.

15-2339

SCALE: - -

PAGE DESCRIPTION:
- -
- -

01/03/2019 - 9:05am rickn V:\projects\15-2339 6.8 Streamline - FSA - Update FL13757.2 for 2014 Florida Bldg Code-Project\WP\TDI Submittal\15-2339d-Dwg-TDI.dwg

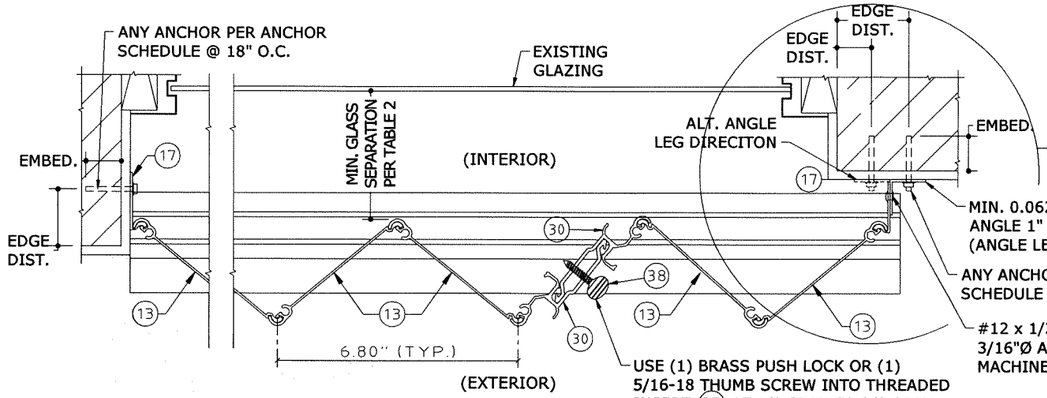

TYPICAL PLAN VIEW
SCALE: 3" = 1'-0"

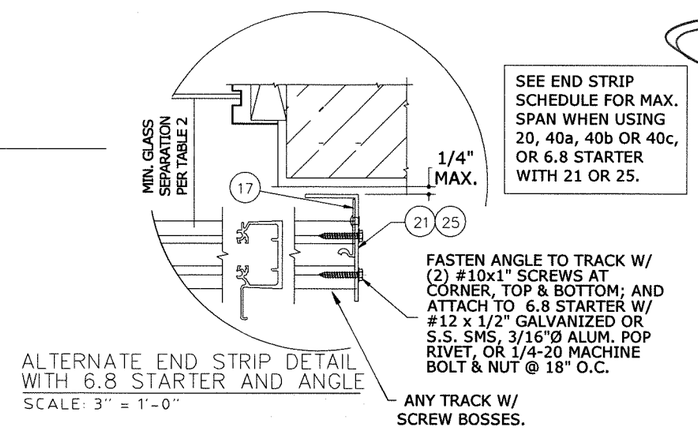

ALTERNATE END STRIP DETAIL WITH 6.8 STARTER AND ANGLE
SCALE: 3" = 1'-0"

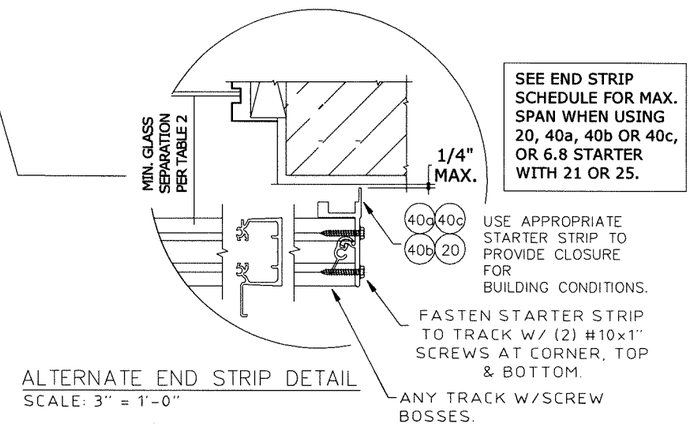

ALTERNATE END STRIP DETAIL
SCALE: 3" = 1'-0"

LOCKING DETAILS FOR CENTER MATES SHOWN ON RANDOM DETAILS

END STRIP SCHEDULE

	PSF	SPAN
1" B/O (2.7") (40a)	62	108"
	72	100"
	82	94"
	112	80"
	132	75"
2" B/O (3.7") (40b)	62	95"
	72	88"
	82	83"
3" B/O (4.7") (40c)	62	86"
	72	79"
	82	74"
ALT. 1" B/O (2.7") (20)	62	110"
	72	102"
	82	95"
	112	81"
	132	75"
1.5"x3" x0.093" (21)	45	93"
	52	87"
	57	83"
	60	81"
	64	78"
	70	75"
	73	73"
2"x3" x0.125" (25)	45	139"
	52	129"
	57	123"
	60	120"
	64	116"
	70	111"
	73	109"

FOR GREATER SPANS OR LOADS THAN SHOWN IN END STRIP SCHEDULE, END STRIPS REQUIRE A 1"X1" .090" CLIP ANGLE MID SPAN USING ANY ANCHOR ON THE ANCHOR SCHEDULE & #14x3/4" TEK SCREW OR 1/4-20 BOLT TO END STRIP.

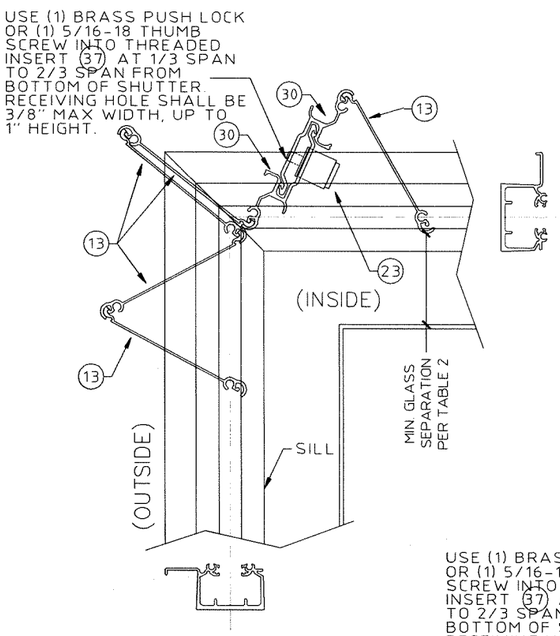

CC1 TYPICAL OUTSIDE CORNER CLOSURE DETAILS WO/CORNER POST
NTS

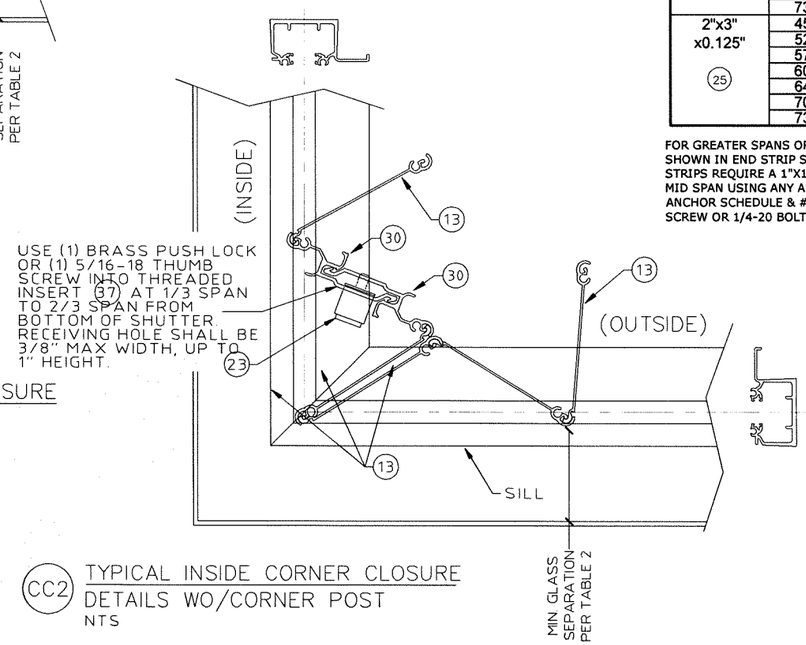

CC2 TYPICAL INSIDE CORNER CLOSURE DETAILS WO/CORNER POST
NTS

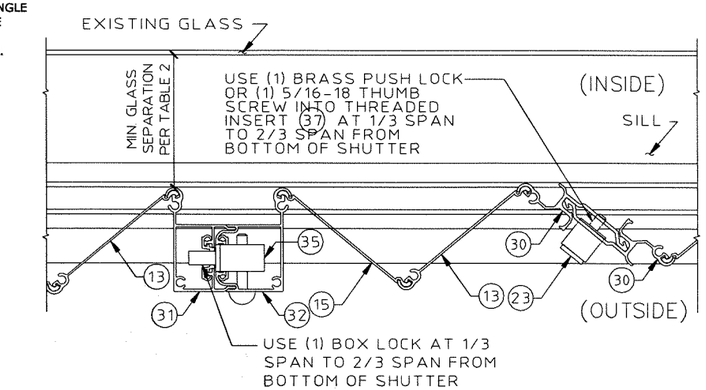

MULTIPLE SHUTTER ASSEMBLY
SCALE: 3" = 1'-0"

FRANK L. BENNARDO, P.E.
#96064
STATE OF TEXAS
01/03/2019
FRANK L. BENNARDO
96064
LICENSED PROFESSIONAL ENGINEER
ENGINEERING EXPRESS, LLC
CORPORATE OFFICE
160 SW 12th AVE, SUITE 106
DEERFIELD BEACH, FL 33442
P: (954) 354-0660 F: (954) 354-0665
E: HELLO@ENGINEERINGEXPRESS.COM
ENGINEERINGEXPRESS.COM
CERT OF AUTH #F-11693

Town & Country INDUSTRIES
Wholesale Aluminum and Building Products
A Division of ABC Supply Co., Inc.
400 WEST MCNAB ROAD
FT. LAUDERDALE, FL 33309

REMARKS	DRWN	CHKD	DATE
INIT ISSUE	KL	FLB	01/24/18
-	-	-	-
-	-	-	-
-	-	-	-

THIS DOCUMENT IS THE PROPERTY OF FRANK L. BENNARDO, P.E. AND SHALL NOT BE REPRODUCED IN WHOLE OR PART WITHOUT WRITTEN CONSENT OF FRANK L. BENNARDO, P.E. - ALTERATIONS, ADDITIONS, HIGHLIGHTING, OR OTHER MARKINGS TO THIS DOCUMENT ARE NOT PERMITTED AND INVALIDATE OUR CERTIFICATION.
COPYRIGHT FRANK L. BENNARDO P.E.

15-2339

SCALE: - -

PAGE DESCRIPTION:
-
-

01/03/2019 - 9:05am rickn V:\projects\15-2339 6.8 Streamline - FSA - Update FL13757.2 for 2014 Florida Bldg Code-Project\WPITDI Submittal\15-2339d-Dwg-TDI.dwg

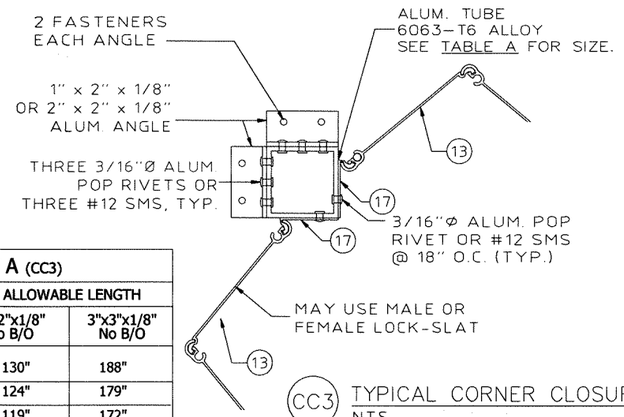

CC3 TYPICAL CORNER CLOSURE DETAILS
NTS

TABLE A (CC3)		
PRESSURE VS ALLOWABLE LENGTH		
PSF	2"x2"x1/8" No B/O	3"x3"x1/8" No B/O
62	130"	188"
72	124"	179"
82	119"	172"
92	114"	165"
102	110"	160"
120	104"	147"
150	97"	131"
200	88"	114"

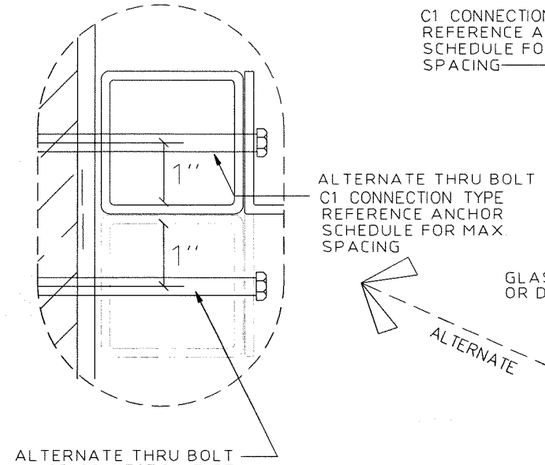

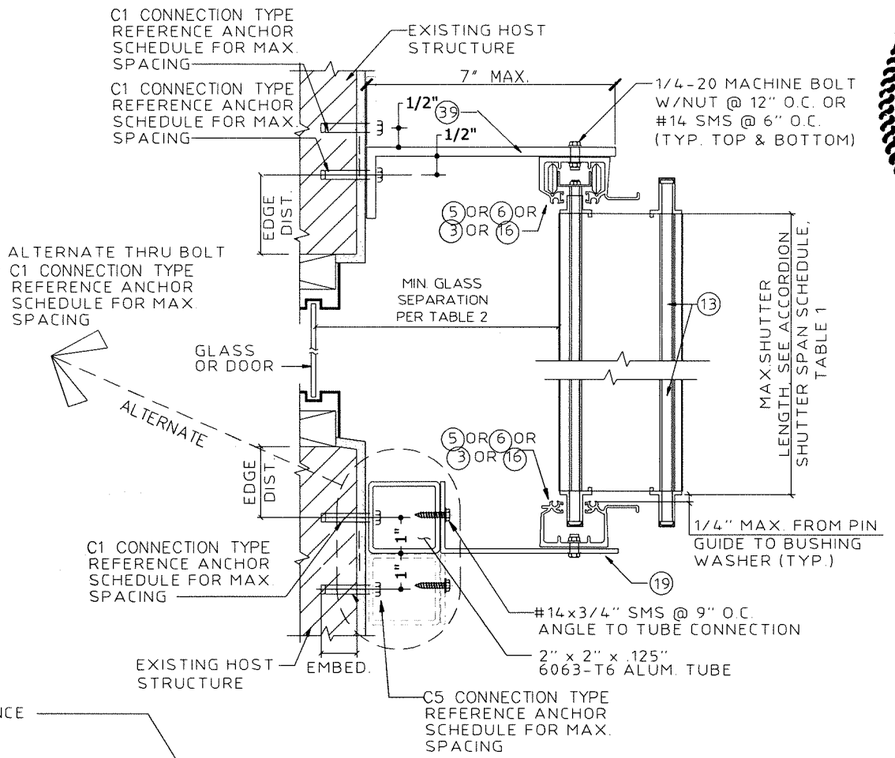

Cb ALTERNATE BUILD OUT MOUNT SECTION
SCALE : 3"= 1'- 0"

TABLE B (CC4)		
PRESSURE VS ALLOWABLE LENGTH		
PSF	2"x2"x1/8" WITH B/O	3"x3"x1/8" WITH B/O
62	113"	166"
72	107"	157"
82	101"	147"
92	95"	139"
102	90"	132"
120	83"	122"
150	74"	109"
200	64"	94"

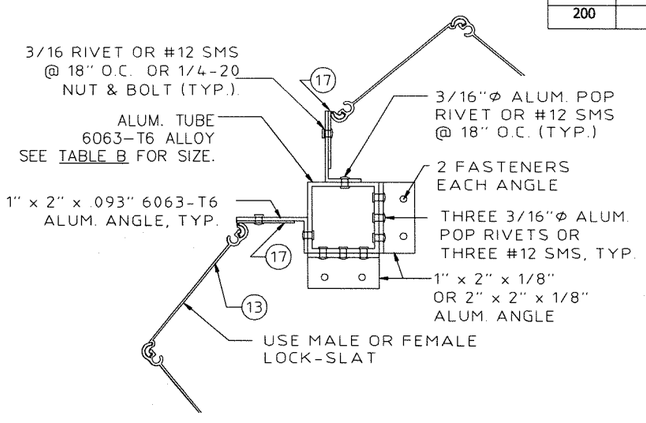

CC4 TYPICAL CORNER CLOSURE DETAILS
NTS

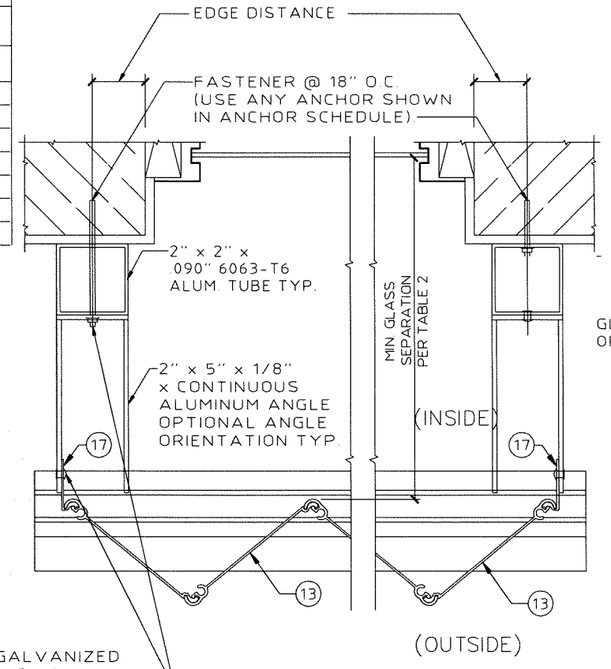

SIDE CLOSURE OPTIONS
SCALE: 3" = 1'-0"

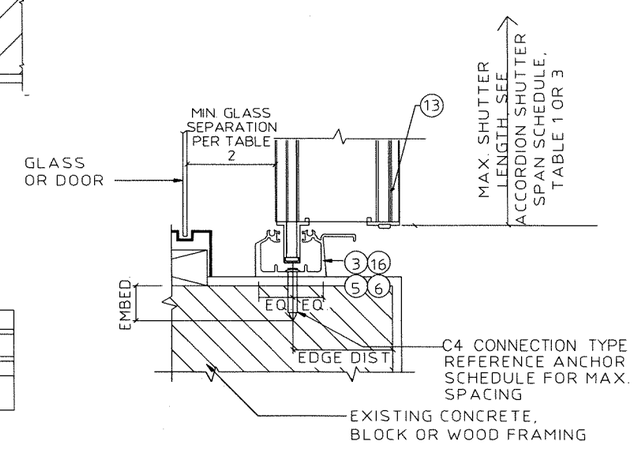

EE INSIDE SILL MOUNT SECTION
SCALE : 3"= 1'- 0"

FRANK L. BENNARDO P.E. #96064
STATE OF TEXAS
01/24/2019
FRANK L. BENNARDO
96064
LICENSED
PROFESSIONAL ENGINEER

ENGINEERING EXPRESS
CORPORATE OFFICE: 1101 SW 12th AVE.
160 SW 12th AVE, SUITE 1010
DEERFIELD BEACH, FL 33442
P: (954) 354-0660 F: (954) 354-0661
E: HELLO@ENGINEERINGEXPRESS.COM
ENGINEERINGEXPRESS.COM
CERT OF AUTH #F-11386

Town & Country INDUSTRIES
Wholesale Aluminum and Building Products
A Division of ABC Supply Co., Inc.
400 WEST MCNAB ROAD
FT. LAUDERDALE, FL 33309

REMARKS	DRWN	CHKD	DATE
INIT ISSUE	KL	FLB	01/24/18
-	-	-	-
-	-	-	-
-	-	-	-

THIS DOCUMENT IS THE PROPERTY OF FRANK L. BENNARDO, P.E. AND SHALL NOT BE REPRODUCED IN WHOLE OR PART WITHOUT WRITTEN CONSENT OF FRANK L. BENNARDO, P.E. - ALTERATIONS, ADDITIONS, HIGHLIGHTING, OR OTHER MARKINGS TO THIS DOCUMENT ARE NOT PERMITTED AND INVALIDATE SUCH CERTIFICATION.

COPYRIGHT FRANK L. BENNARDO P.E.

15-2339

SCALE: - -

PAGE DESCRIPTION:
-
-

01/03/2019 - 9:05am rickn V:\projects\15-2339 6.8 Streamline - FSA - Update FL13757.2 for 2014 Florida Bldg Code-Project\WP\TDI Submittal\15-2339d-Dwg-TDI.dwg

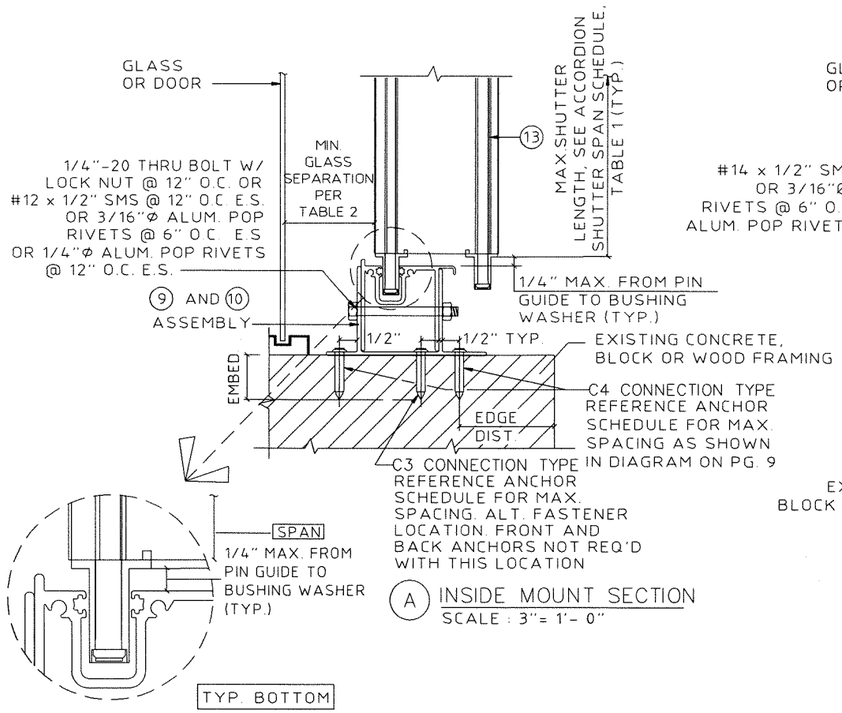

A INSIDE MOUNT SECTION
SCALE : 3"= 1'- 0"

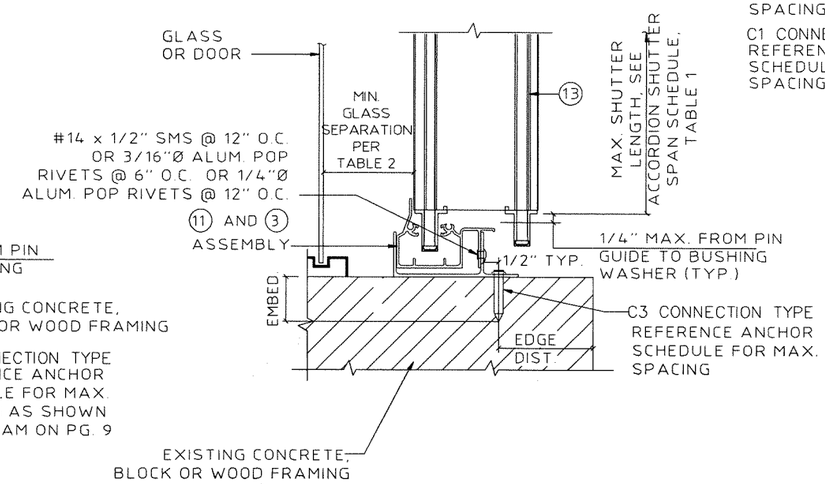

B INSIDE MOUNT SECTION
SCALE : 3"= 1'- 0"

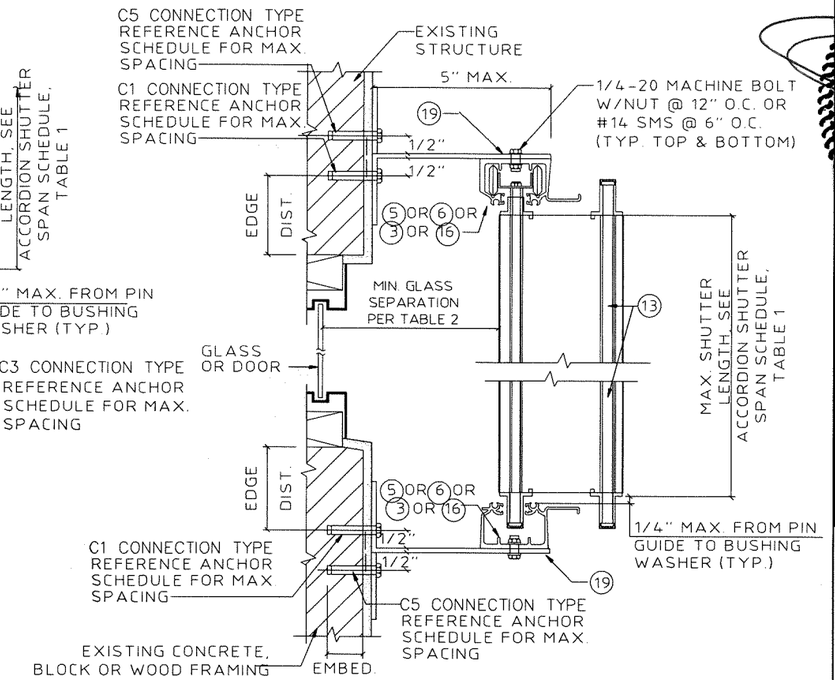

Ca BUILD OUT MOUNT SECTION
SCALE : 3"= 1'- 0"

NOTE: FOR DETAILS A, B, D, AND E ON THIS SHEET, THE BASE TRACK MAY BE INSTALLED IN SECTIONS WITH 1/4" GAPS, PROVIDED THAT EACH SECTION HAS A MINIMUM OF TWO SETS OF ANCHORS AND IS A MINIMUM OF 12" LONG. THE SILL OR CEILING TRACK USED WITH THE BASE TRACK MUST BE CONTINUOUS OVER THE GAPS BETWEEN SECTIONS.

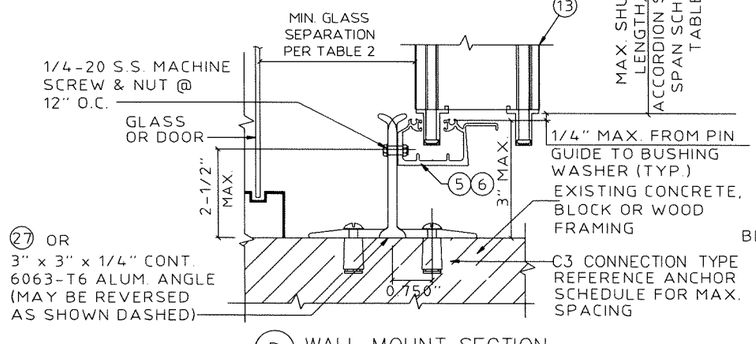

D WALL MOUNT SECTION
SCALE : 3"= 1'- 0"

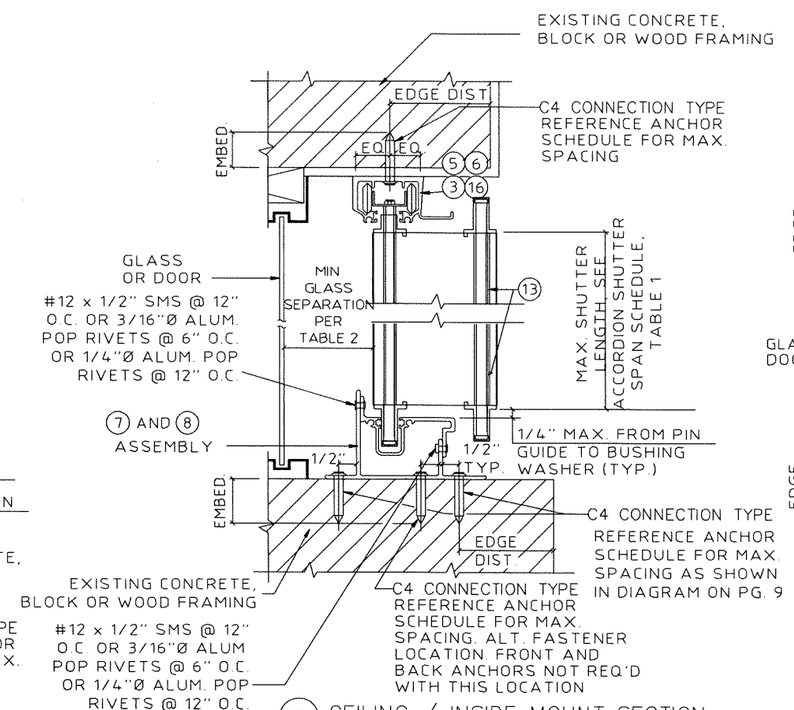

E CEILING / INSIDE MOUNT SECTION
SCALE : 3"= 1'- 0"

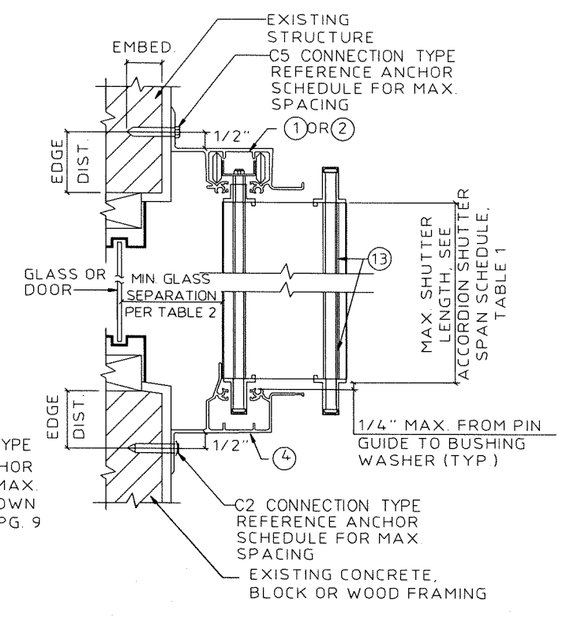

F WALL/BUILD OUT SECTION
SCALE : 3"= 1'- 0"

FRANK L. BENNARDO, P.E.
#P-96064
01/03/2019
FRANK L. BENNARDO
96064
STATE OF TEXAS
LICENSED PROFESSIONAL ENGINEER

ENGINEER EXPRESS
CORPORATE OFFICE: 954-354-0660
160 SW 12th AVE, SUITE 206
DEERFIELD BEACH, FL 33442
P: (954) 354-0660 F: (954) 354-0663
E: HELLO@ENGINEERINGEXPRESS.COM
ENGINEERINGEXPRESS.COM
CERT OF AUTH #F-17483

Town & Country INDUSTRIES
Wholesale Aluminum and Building Products
A Division of ABC Supply Co., Inc.
400 WEST MCNAB ROAD
FT. LAUDERDALE, FL 33309

REMARKS	DRWN	CHKD	DATE
INIT ISSUE	KL	FLB	01/24/18
-	-	-	-
-	-	-	-
-	-	-	-
-	-	-	-

THIS DOCUMENT IS THE PROPERTY OF FRANK L. BENNARDO, P.E AND SHALL NOT BE REPRODUCED IN WHOLE OR PART WITHOUT WRITTEN CONSENT OF FRANK L. BENNARDO, P.E. ALTERATIONS, ADDITIONS, REPLACEMENTS, OR OTHER MARKS TO THIS DOCUMENT ARE NOT PERMITTED AND INVALIDATE CERTIFICATION.

COPYRIGHT FRANK L. BENNARDO P.E.

15-2339

SCALE: -

PAGE DESCRIPTION:
-
-

6 OF 11

01/03/2019 - 9:05am rickn V:\projects\15-2339 6.8 Streamline - FSA - Update FL13757.2 for 2014 Florida Bldg Code-Project\WP\TDI Submittal\15-2339d-Dwg-TDI.dwg

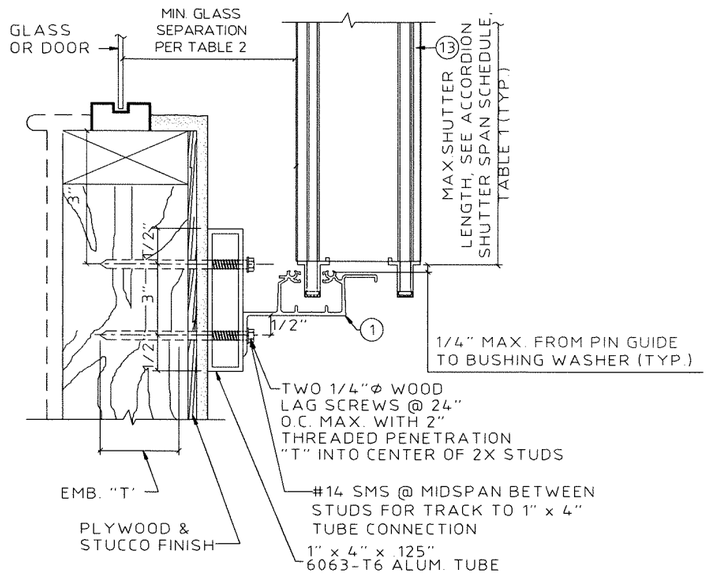

THIS DETAIL TO BE USED WHEN STUD SPACING EXCEEDS THE MAX. ALLOWABLE ANCHOR SPACING.

G WALL MOUNT SECTION
SCALE : 3"= 1'- 0"

THIS DETAIL MAY ALSO BE USED AT TOP

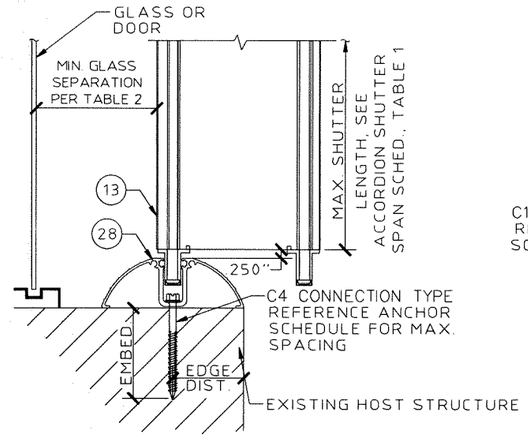

N DECORATIVE FLOOR TRACK DETAIL
SCALE : 3"= 1'- 0"

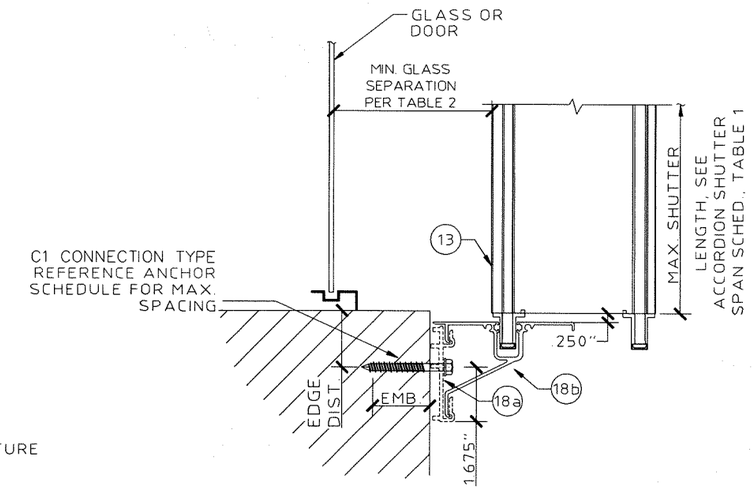

O WALL MOUNT SILL DETAIL
SCALE : 3"= 1'- 0"

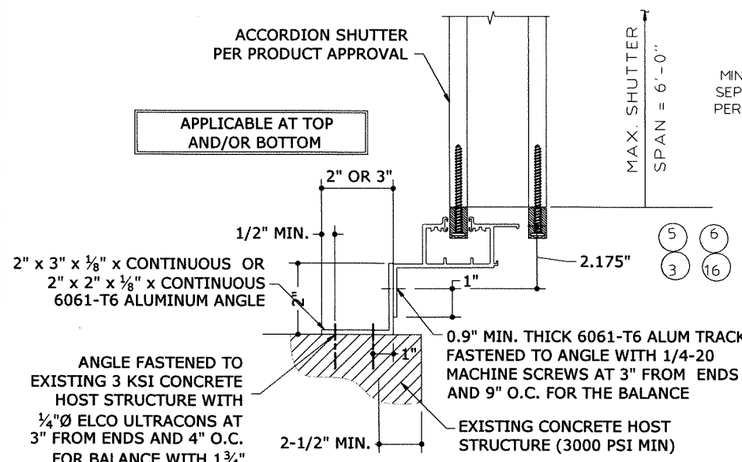

APPLICABLE AT TOP AND/OR BOTTOM

MAX. DESIGN LOAD AT 5'-0" MAX SPAN : ± 62 P.S.F.
MAX. DESIGN LOAD AT 6'-0" MAX SPAN : ± 52 P.S.F.

Ha BUILDOUT MOUNT
SCALE : NTS

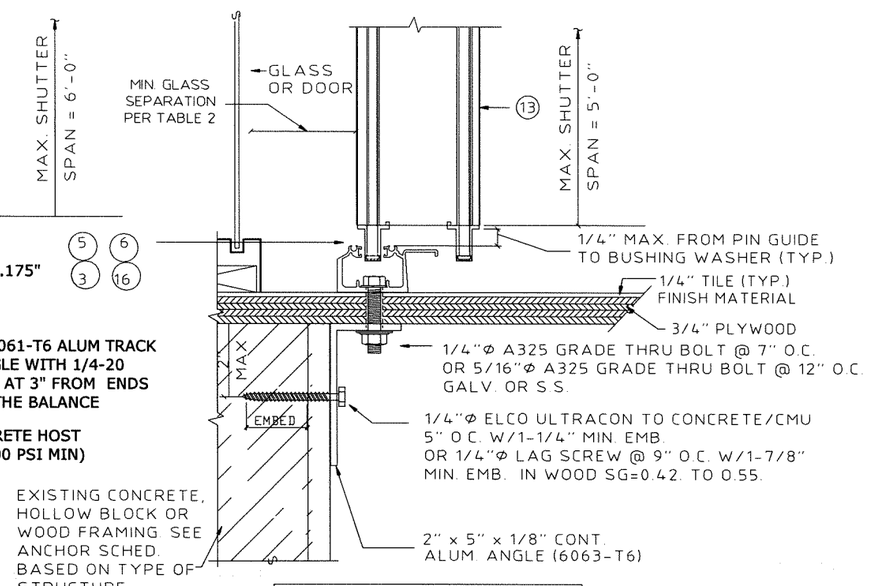

(MAX. DESIGN LOAD ± 72 P.S.F.)

Hb PASS THRU DETAIL
SCALE : 3"= 1'- 0"

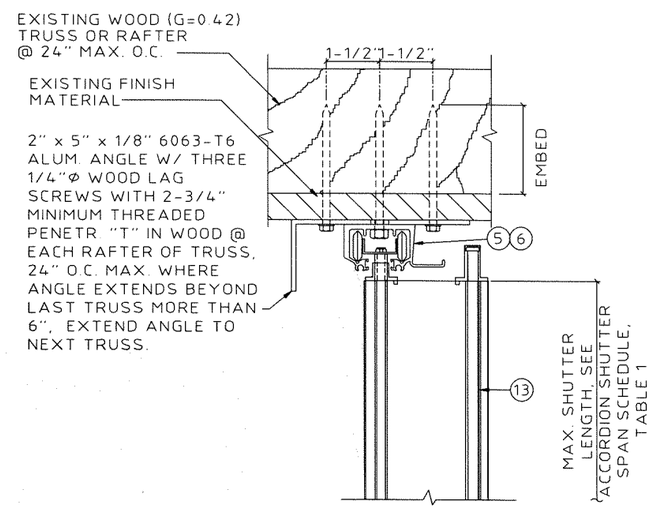

K TRUSS MOUNT SECTION
SCALE : 3"= 1'- 0"

FRANK L. BENNARDO, P.E.
#96064
STATE OF FLORIDA
01/03/2019
FRANK L. BENNARDO
96064
LICENSED
PROFESSIONAL ENGINEER
ENGINEERING EXPRESS
CORPORATE OFFICE: 3066
P.E. #: 3352
P: (954) 354-0660 F: (954) 354-0661
E: HELLO@ENGINEERINGEXPRESS.COM
ENGINEERINGEXPRESS.COM
CERT OF AUTH #F-11345
160 SW 12th AVE, SUITE 206
DEERFIELD BEACH, FL 33442

Town & Country INDUSTRIES
Wholesale Aluminum and Building Products
A Division of ABC Supply Co., Inc.
400 WEST MCNAB ROAD
FT. LAUDERDALE, FL 33309

REMARKS	DRWN	CHKD	DATE
INIT ISSUE	KL	FLB	01/24/18
-	-	-	-
-	-	-	-
-	-	-	-
-	-	-	-

THIS DOCUMENT IS THE PROPERTY OF FRANK L. BENNARDO, P.E. AND SHALL NOT BE REPRODUCED IN WHOLE OR PART WITHOUT WRITTEN CONSENT OF FRANK L. BENNARDO, P.E. ALTERATIONS, ADDITIONS, HIGHLIGHTING OR OTHER MARKINGS TO THIS DOCUMENT ARE NOT PERMITTED AND INVALIDATE OVER SIGNATURE.
COPYRIGHT FRANK L. BENNARDO P.E.

15-2339

SCALE: - -

PAGE DESCRIPTION:
-
-

01/03/2019 - 9:05am rickn V:\projects\15-2339 6.8 Streamline - FSA - Update FL13757.2 for 2014 Florida Bldg Code-Project\WP\TDI Submittal\15-2339d-Dwg-TDI.dwg

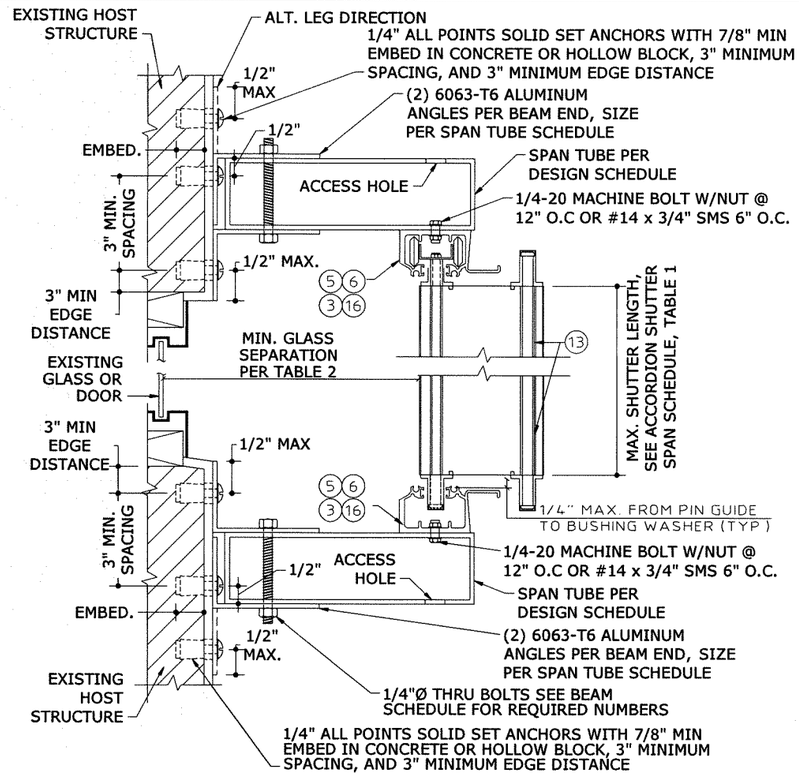

MAX. DESIGN LOAD = ± 72 PSF

1/8 SPAN TUBE SECTION

N.T.S. VERT SECTION

SPAN TUBE SCHEDULE									
TUBE SIZE	SHUTTER SPAN	ALLOWABLE TUBE SPAN		NUMBER OF THRU-BOLTS		NUMBER OF ANCHORS PER ANGLE		MINIMUM ANGLE LENGTH	
		TOP TUBE	BOTTOM TUBE	TOP TUBE	BOTTOM TUBE	TOP TUBE	BOTTOM TUBE	TOP TUBE	BOTTOM TUBE
2"x5"x 0.125"	60"	123.8"	135.2"	2	2	2	3	4"	7"
	96"	101.7"	106.9"	2	2	3	3	7"	7"
	123"	89.9"	94.4"	2	2	3	3	7"	7"
2"x6"x 0.125"	60"	129.1"	157.0"	2	2	2	3	4"	7"
	96"	114.8"	124.1"	2	2	3	3	7"	7"
	123"	102.8"	109.6"	2	2	4	4	10"	10"
2"x8"x 0.125"	60"	138.0"	196.9"	2	2	3	3	7"	7"
	96"	122.7"	155.7"	2	2	3	4	7"	10"
	123"	115.4"	137.5"	2	3	4	5	10"	13"
2"x10"x 0.1875"	60"	158.1"	240.0"	2	2	3	4	7"	10"
	96"	140.6"	229.9"	2	3	4	6	10"	16"
	123"	132.2"	203.1"	3	4	5	7	13"	19"

SPAN TUBE SCHEDULE NOTES:

1. USE 2"x3"x1/4" OR 2"x5"x1/4" ANGLES FOR 2"x5" & 2"x6" BEAMS.
2. USE 2"x5"x1/4" ANGLES FOR 2"x8" & 2"x10" BEAMS.
3. USE BEAM SCHEDULE FOR DETAIL 3/8.
4. TOP & BOTTOM BEAMS MAY BE USED TOGETHER OR IN COMBINATION WITH OTHER CONNECTION DETAILS. WHERE USED TOGETHER, BEAM MUST BE LIMITED TO TOP BEAM SPANS.
5. SPAN TUBES MAY BE USED IN A MID-SPAN CONDITION WITH SHUTTERS SPANNING ABOVE AND BELOW THE BEAM. MID-SPAN TUBES SHALL HAVE TOP BEAM LIMITATIONS (INCLUDING SPANS, ANCHORS, ANGLES AND BOLTS), WITH THE SHUTTER SPAN TAKEN AS THE SUM OF THE SPANS ABOVE AND BELOW THE BEAM.
6. LAP BEAMS ARE NOT ALLOWED.
7. ALL BEAMS AND ANGLES TO BE 6063-T6 ALUMINUM.

STATE OF TEXAS
FRANK L. BENNARDO
96064
LICENSED
PROFESSIONAL ENGINEER

FRANK L. BENNARDO, P.E.
PE96064
01/03/2019

ENGINEERING EXPRESS®
CORPORATE OFFICE:
160 SW 12th AVE, SUITE 106
DEERFIELD BEACH, FL 33442
P: (954) 354-0660 F: (954) 354-0443
E: HELLO@ENGINEERINGEXPRESS.COM
ENGINEERINGEXPRESS.COM
CERT OF AUTH #F-11383

Town & Country INDUSTRIES
Wholesale Aluminum and Building Products
A Division of ASC Supply Co., Inc.
400 WEST MCNAB ROAD
FT. LAUDERDALE, FL 33309

REMARKS	DRWN	CHKD	DATE
INIT ISSUE	KL	FLB	01/24/18
-	-	-	-
-	-	-	-
-	-	-	-
-	-	-	-

THIS DOCUMENT IS THE PROPERTY OF FRANK L. BENNARDO, P.E. AND SHALL NOT BE REPRODUCED IN WHOLE OR PART WITHOUT WRITTEN CONSENT OF FRANK L. BENNARDO, P.E. * ALTERATIONS, ADDITIONS, HIGHLIGHTING, OR OTHER MARKINGS TO THIS DOCUMENT ARE NOT PERMITTED AND INVALIDATE OUR CERTIFICATION.
COPYRIGHT FRANK L. BENNARDO P.E.

15-2339

SCALE: - -

PAGE DESCRIPTION:
-
-

01/03/2019 - 9:05am rickn V:\projects\15-2339 6.8 Streamline - FSA - Update FL13757.2 for 2014 Florida Bldg Code-Project\WP\TDI Submittal\15-2339d-Dwg-TDI.dwg

ANCHOR SCHEDULE: CONCRETE

HOST STRUCT.	ANCHOR	LOAD (psf)	C1	C2	C3	C4	C5	C1	C2	C3	C4	C5	C1	C2	C3	C4	C5
			2.5" MIN EDGE DISTANCE														
			Spans Up To 6'-0" CONN TYPE					Spans Up To 8'-3" CONN TYPE					Spans Up To 12'-0" CONN TYPE				
CONCRETE	1/4" ITW TAPCON OR ELCO ULTRACON WITH 1-3/4" EMBED (3192psi MIN CONC)	43	16.0"	16.0"	15.0"	16.0"	16.0"	16.0"	16.0"	9.0"	13.0"	16.0"	16.0"	9.5"	5.5"	8.5"	14.5"
		53	16.0"	16.0"	10.5"	14.5"	16.0"	16.0"	12.0"	7.0"	10.5"	16.0"	15.0"	7.5"	4.5"	7.5"	10.5"
		62	16.0"	16.0"	8.5"	12.5"	16.0"	16.0"	9.5"	5.5"	8.5"	15.0"	15.0"	7.5"	4.5"	7.5"	10.5"
		70	16.0"	13.0"	7.0"	11.0"	16.0"	15.5"	8.0"	5.0"	7.5"	11.5"	15.0"	7.5"	4.5"	7.5"	10.5"
		100	15.0"	7.5"	4.5"	7.5"	10.5"	15.0"	7.5"	4.5"	7.5"	10.5"	15.0"	7.5"	4.5"	7.5"	10.5"
	1/4" MILLENIUM MILLFAST WITH 1-3/4" EMBED (3275psi MIN CONCRETE)	43	16.0"	16.0"	15.0"	16.0"	16.0"	16.0"	16.0"	9.0"	13.5"	16.0"	16.0"	8.5"	5.5"	9.0"	13.5"
		53	16.0"	16.0"	11.0"	15.0"	16.0"	16.0"	11.0"	7.0"	10.5"	16.0"	13.5"	7.0"	4.5"	7.5"	9.5"
		62	16.0"	15.0"	8.5"	13.0"	16.0"	16.0"	8.5"	5.5"	9.0"	13.5"	13.5"	7.0"	4.5"	7.5"	9.5"
		70	16.0"	12.0"	7.0"	11.0"	16.0"	14.0"	7.0"	4.5"	8.0"	10.5"	13.5"	7.0"	4.5"	7.5"	9.5"
		100	13.5"	7.0"	4.5"	7.5"	9.5"	13.5"	7.0"	4.5"	7.5"	9.5"	13.5"	7.0"	4.5"	7.5"	9.5"
	1/4" ELCO CRETEFLEX SS4 W/ 2" EMBED (3350psi MIN CONC)	43	16.0"	16.0"	16.0"	16.0"	16.0"	16.0"	16.0"	13.5"	16.0"	16.0"	16.0"	12.5"	8.0"	13.0"	16.0"
		53	16.0"	16.0"	16.0"	16.0"	16.0"	16.0"	16.0"	10.0"	15.5"	16.0"	16.0"	10.0"	6.5"	11.0"	14.0"
		62	16.0"	16.0"	12.5"	16.0"	16.0"	16.0"	12.5"	8.0"	13.0"	16.0"	16.0"	10.0"	6.5"	11.0"	14.0"
		70	16.0"	16.0"	10.5"	16.0"	16.0"	16.0"	10.5"	7.0"	11.5"	15.0"	16.0"	10.0"	6.5"	11.0"	14.0"
		100	16.0"	10.0"	6.5"	11.0"	14.0"	16.0"	10.0"	6.5"	11.0"	14.0"	16.0"	10.0"	6.5"	11.0"	14.0"
			1" MIN EDGE DISTANCE														
			C1	C2	C3	C4	C5	C1	C2	C3	C4	C5	C1	C2	C3	C4	C5
	1/4" ITW TAPCON OR ELCO ULTRACON WITH 1-3/4" EMBED (3192psi MIN CONC)	43	16.0"	16.0"	7.5"	8.0"	16.0"	16.0"	16.0"	5.0"	5.5"	16.0"	16.0"	9.0"	3.0"	4.0"	14.0"
		53	16.0"	16.0"	5.5"	6.5"	16.0"	16.0"	12.0"		4.5"	16.0"	14.5"	7.5"			10.0"
		62	16.0"	15.5"	4.5"	5.5"	16.0"	16.0"	9.0"		4.0"	14.5"	14.5"	7.5"			10.0"
		70	16.0"	12.5"	4.0"	5.0"	16.0"	15.0"	7.5"			11.0"	14.5"	7.5"			10.0"
		100	14.5"	7.5"			10.0"	14.5"	7.5"			10.0"	14.5"	7.5"			10.0"
	1/4" MILLENIUM MILLFAST WITH 1-3/4" EMBED (3275psi MIN CONCRETE)	43	16.0"	16.0"	11.0"	13.5"	16.0"	16.0"	13.0"	6.5"	9.5"	16.0"	13.0"	7.0"	4.0"	6.5"	10.5"
		53	16.0"	16.0"	8.0"	11.0"	16.0"	16.0"	9.0"	5.0"	7.5"	16.0"	10.5"	5.5"		5.5"	7.5"
		62	16.0"	11.5"	6.0"	9.0"	16.0"	13.5"	7.0"	4.0"	6.5"	11.0"	10.5"	5.5"		5.5"	7.5"
		70	16.0"	9.5"	5.5"	8.0"	16.0"	11.5"	5.5"		5.5"	8.5"	10.5"	5.5"		5.5"	7.5"
		100	10.5"	5.5"		5.5"	7.5"	10.5"	5.5"		5.5"	7.5"	10.5"	5.5"		5.5"	7.5"
			1-1/4" MIN EDGE DISTANCE														
	1/4" ALL-POINTS SOLID-SET ANCHOR W/ 7/8" EMBED & 1/4-20 SS MACHINE SCREW (3000psi MIN CONC) *		C1	C2	C3	C4	C5	C1	C2	C3	C4	C5	C1	C2	C3	C4	C5
		43	16.0"	16.0"	8.5"	10.5"	16.0"	16.0"	12.0"	5.5"	7.5"	16.0"	12.5"	6.5"	3.0"	5.0"	10.0"
		53	16.0"	15.0"	6.5"	8.0"	16.0"	16.0"	8.5"	4.0"	6.0"	15.5"	10.0"	5.0"		4.0"	7.0"
		62	16.0"	11.0"	5.0"	7.0"	16.0"	12.5"	6.5"	3.5"	5.0"	10.0"	10.0"	5.0"		4.0"	7.0"
		70	16.0"	9.0"	4.5"	6.0"	16.0"	10.5"	5.5"	3.0"	4.0"	8.0"	10.0"	5.0"		4.0"	7.0"
		100	10.0"	5.0"		4.0"	7.0"	10.0"	5.0"		4.0"	7.0"	10.0"	5.0"		4.0"	7.0"
			3" MIN EDGE DISTANCE														
	1/4" ALL-POINTS SOLID-SET ANCHOR W/ 7/8" EMBED & 1/4-20 SS MACHINE SCREW (3000psi MIN CONC) *		C1	C2	C3	C4	C5	C1	C2	C3	C4	C5	C1	C2	C3	C4	C5
		43	16.0"	16.0"	16.0"	16.0"	16.0"	16.0"	16.0"	11.5"	16.0"	16.0"	16.0"	11.0"	7.0"	11.0"	16.0"
		53	16.0"	16.0"	13.5"	16.0"	16.0"	16.0"	14.0"	8.5"	13.5"	16.0"	16.0"	8.5"	5.5"	9.5"	12.0"
		62	16.0"	16.0"	10.5"	16.0"	16.0"	16.0"	11.0"	7.0"	11.0"	16.0"	16.0"	8.5"	5.5"	9.5"	12.0"
		70	16.0"	15.0"	9.0"	14.0"	16.0"	16.0"	9.0"	6.0"	10.0"	13.0"	16.0"	8.5"	5.5"	9.5"	12.0"
		100	16.0"	8.5"	5.5"	9.5"	12.0"	16.0"	8.5"	5.5"	9.5"	12.0"	16.0"	8.5"	5.5"	9.5"	12.0"
			2-5/8" MIN EDGE DISTANCE														
	1/4" POWERS SS DROP-IN W/ 1/4-20 SS BOLT AND 1" EMBED (3000psi MIN CONC) *		C1	C2	C3	C4	C5	C1	C2	C3	C4	C5	C1	C2	C3	C4	C5
		43	16.0"	16.0"	14.0"	16.0"	16.0"	16.0"	14.0"	8.0"	12.5"	16.0"	14.0"	7.5"	5.0"	8.0"	11.5"
		53	16.0"	16.0"	9.5"	14.0"	16.0"	16.0"	9.5"	6.0"	10.0"	16.0"	11.5"	6.0"	4.0"	7.0"	8.0"
		62	16.0"	12.5"	7.5"	12.0"	16.0"	14.5"	7.5"	5.0"	8.5"	11.5"	11.5"	6.0"	4.0"	7.0"	8.0"
		70	16.0"	10.0"	6.5"	10.5"	16.0"	12.0"	6.0"	4.0"	7.5"	9.0"	11.5"	6.0"	4.0"	7.0"	8.0"
		100	11.5"	6.0"	4.0"	7.0"	8.0"	11.5"	6.0"	4.0"	7.0"	8.0"	11.5"	6.0"	4.0"	7.0"	8.0"
			3-1/2" MIN EDGE DISTANCE														
	1/4" POWERS SS DROP-IN W/ 1/4-20 SS BOLT AND 1" EMBED (3000psi MIN CONC) *		C1	C2	C3	C4	C5	C1	C2	C3	C4	C5	C1	C2	C3	C4	C5
		43	16.0"	16.0"	15.0"	16.0"	16.0"	16.0"	14.5"	9.0"	13.5"	16.0"	15.0"	7.5"	5.0"	9.0"	12.0"
		53	16.0"	16.0"	10.5"	15.0"	16.0"	16.0"	10.0"	6.5"	10.5"	16.0"	12.0"	6.0"	4.0"	7.5"	8.5"
		62	16.0"	13.0"	8.0"	12.5"	16.0"	15.0"	8.0"	5.0"	9.0"	12.0"	12.0"	6.0"	4.0"	7.5"	8.5"
		70	16.0"	10.5"	7.0"	11.0"	16.0"	12.5"	6.5"	4.5"	8.0"	9.5"	12.0"	6.0"	4.0"	7.5"	8.5"
		100	12.0"	6.0"	4.0"	7.5"	8.5"	12.0"	6.0"	4.0"	7.5"	8.5"	12.0"	6.0"	4.0"	7.5"	8.5"
			2" MIN EDGE DISTANCE														
	#12 SMS W/ 2" EYEWALL ARMOR INSERT W/ 2" EMBED (2000psi MIN CONC)		C1	C2	C3	C4	C5	C1	C2	C3	C4	C5	C1	C2	C3	C4	C5
		43	16.0"	16.0"	11.5"	14.0"	16.0"	16.0"	16.0"	7.5"	10.0"	16.0"	16.0"	9.0"	4.5"	6.5"	13.5"
		53	16.0"	16.0"	8.5"	11.0"	16.0"	16.0"	11.5"	5.5"	8.0"	16.0"	14.0"	7.0"	3.5"	5.5"	10.0"
		62	16.0"	15.0"	7.0"	9.5"	16.0"	16.0"	9.0"	4.5"	6.5"	14.0"	14.0"	7.0"	3.5"	5.5"	10.0"
		70	16.0"	12.0"	6.0"	8.0"	16.0"	14.5"	7.5"	4.0"	6.0"	10.5"	14.0"	7.0"	3.5"	5.5"	10.0"
		100	14.0"	7.0"	3.5"	5.5"	10.0"	14.0"	7.0"	3.5"	5.5"	10.0"	14.0"	7.0"	3.5"	5.5"	10.0"
	#12 SMS W/ 2.75" EYEWALL ARMOR INSERT W/ 2.5" EMBED (2000psi MIN CONC)	43	16.0"	16.0"	16.0"	16.0"	16.0"	16.0"	16.0"	10.0"	14.0"	16.0"	16.0"	11.5"	6.0"	9.5"	16.0"
		53	16.0"	16.0"	12.0"	16.0"	16.0"	16.0"	15.0"	7.5"	11.0"	16.0"	16.0"	9.0"	5.0"	8.0"	13.0"
		62	16.0"	16.0"	9.5"	13.5"	16.0"	16.0"	11.5"	6.5"	9.5"	16.0"	16.0"	9.0"	5.0"	8.0"	13.0"
		70	16.0"	16.0"	8.0"	11.5"	16.0"	16.0"	9.5"	5.5"	8.5"	14.0"	16.0"	9.0"	5.0"	8.0"	13.0"
		100	16.0"	9.0"	5.0"	8.0"	13.0"	16.0"	9.0"	5.0"	8.0"	13.0"	16.0"	9.0"	5.0"	8.0"	13.0"

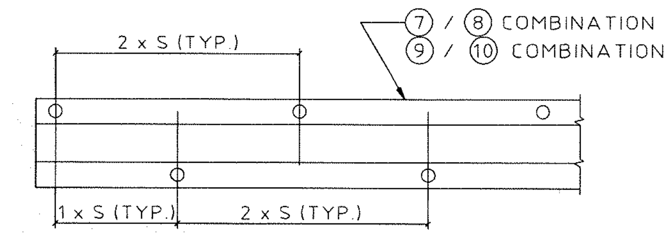

NOTE: "S" INDICATES ANCHOR SCHEDULE SPACING

SPACING DIAGRAM FOR C2 & C4 CONNECTION TYPE:

- C2 CONNECTION TYPE USING PIECE (10) WITH OUTSIDE ANCHORS ONLY
- C4 CONNECTION TYPE USING PIECE (8) WITH OUTSIDE ANCHORS ONLY

ANCHOR NOTES:

1. SPANS AND LOADS SHOWN HERE ARE FOR DETERMINING ANCHOR SPACING ONLY. ALLOWABLE STORM SHUTTER SPANS FOR SPECIFIC LOADS MUST BE LIMITED TO THOSE SHOWN IN TABLE 1 (Pg 1).
2. ENTER ANCHOR SCHEDULE BASED ON THE EXISTING STRUCTURE MATERIAL, ANCHOR TYPE AND EDGE DISTANCE. SELECT DESIGN LOAD GREATER THAN OR EQUAL TO NEGATIVE DESIGN LOAD ON SHUTTER AND SELECT SPAN GREATER THAN OR EQUAL TO SHUTTER SPAN.
3. SEE MOUNTING SECTION DETAILS FOR IDENTIFICATION OF CONNECTION TYPE.
4. EXISTING STRUCTURE MAY BE CONCRETE, ASTM C-90 HOLLOW CONCRETE BLOCK OR WOOD FRAMING. REFERENCE ANCHOR SCHEDULE FOR PROPER ANCHOR TYPE BASED ON TYPE OF EXISTING STRUCTURE AND APPROPRIATE CONNECTION TYPE. SEE CONNECTION DETAILS FOR IDENTIFICATION OF CONNECTION TYPE.
5. ALL CONCRETE ANCHORS SHALL BE INSTALLED TO NON-CRACKED CONCRETE ONLY.
6. THE CONTRACTOR IS RESPONSIBLE TO ENSURE THE ANCHORS ARE INSTALLED IN ACCORDANCE WITH MANUFACTURERS' RECOMMENDATIONS. EMBEDMENT LENGTHS SHALL BE AS NOTED AND DO NOT INCLUDE STUCCO OR OTHER FINISHES.
7. WHERE EXISTING STRUCTURE IS WOOD FRAMING, WOOD FRAMING CONDITIONS VARY. FIELD VERIFY THAT FASTENERS ARE INTO ADEQUATE WOOD FRAMING MEMBERS, NOT PLYWOOD. FASTENING TO PLYWOOD IS ACCEPTABLE ONLY FOR SIDE CLOSURE PIECES.
8. WHERE LAG SCREWS FASTEN TO NARROW FACE OF STUD FRAMING, FASTENER SHALL BE LOCATED IN CENTER OF NOMINAL 2" x 4" (MIN.) WOOD STUD. 3/4" EDGE DISTANCE IS ACCEPTABLE FOR WOOD FRAMING. LAG SCREWS SHALL HAVE PHILLIPS PAN HEAD OR HEX HEAD.
9. MACHINE SCREWS SHALL HAVE MINIMUM OF 1/2" ENGAGEMENT OF THREADS IN BASE ANCHOR AND MAY HAVE EITHER A PAN HEAD, TRUSS HEAD, OR WAFER HEAD (SIDEWALK BOLT), U.O.N.

▨ DESIGNATES ANCHOR CONDITIONS WHICH ARE NOT ACCEPTABLE USES.

* DESIGNATES ANCHORS WHICH ARE REMOVABLE BY REMOVING MACHINE SCREW, NUT OR WASHER WINGNUT.

11. MINIMUM CONCRETE STRENGTHS ARE AS INDICATED IN ANCHOR SCHEDULE.
12. WHEN ANCHORING TO HOLLOW BLOCK, SDS DRILLS SHOULD NOT BE USED TO DRILL INTO HOLLOW BLOCK, NOR SHOULD IMPACT DRILLS BE USED TO INSTALL CONCRETE SCREWS TO HOLLOW BLOCK

FRANK L. BENNARDO, P.E.
STATE OF TEXAS
01/03/2019
FRANK L. BENNARDO
96064
LICENSED PROFESSIONAL ENGINEER

ENGINEERING EXPRESS
CORPORATE OFFICE & SALES
160 SW 12th AVE, SUITE 106
DEERFIELD BEACH, FL 33442
P: (954) 354-0660 F: (954) 354-0443
E: HELLO@ENGINEERINGEXPRESS.COM
ENGINEERINGEXPRESS.COM
CERT OF AUTH #F-11383

Town & Country INDUSTRIES
Wholesale Aluminum and Building Products
A Division of ABC Supply Co. Inc.
400 WEST MCNAB ROAD
FT. LAUDERDALE, FL 33309

REMARKS	DRWN	CHKD	DATE
INIT ISSUE	KL	FLB	01/24/18

THIS DOCUMENT IS THE PROPERTY OF FRANK L. BENNARDO, P.E. AND SHALL NOT BE REPRODUCED IN WHOLE OR PART WITHOUT WRITTEN CONSENT OF FRANK L. BENNARDO, P.E. ALTERATIONS, ADDITIONS, HIGHLIGHTING, OR OTHER MARKINGS TO THIS DOCUMENT ARE NOT PERMITTED AND SHALL INVALIDATE OUR CERTIFICATION.

COPYRIGHT FRANK L. BENNARDO P.E.

15-2339

SCALE: -

PAGE DESCRIPTION: -

V:\projects\15-2339 6.8 Streamline - FSA - Update FL13757.2 for 2014 Florida Bldg Code-Project\WP\TDI Submittal\15-2339d-Dwg-TDI.dwg
01/03/2019 - 9:05am rickn

ANCHOR SCHEDULE: CONCRETE (CONT.)

HOST STRUCT.	ANCHOR	LOAD (psf)	2-3/16" MIN EDGE DISTANCE															3-1/8" MIN EDGE DISTANCE													
			Spans Up To 6'-0" CONN TYPE					Spans Up To 8'-3" CONN TYPE					Spans Up To 12'-0" CONN TYPE					Spans Up To 6'-0" CONN TYPE					Spans Up To 8'-3" CONN TYPE					Spans Up To 12'-0" CONN TYPE				
			C1	C2	C3	C4	C5	C1	C2	C3	C4	C5	C1	C2	C3	C4	C5	C1	C2	C3	C4	C5	C1	C2	C3	C4	C5	C1	C2	C3	C4	C5
CONCRETE	5/16" ITW TAPCON XL WITH 1-3/4" EMBED (2899psi MIN CONC)	43	16.0"	16.0"	16.0"	16.0"	16.0"	16.0"	16.0"	12.0"	16.0"	16.0"	16.0"	11.0"	7.0"	12.0"	16.0"	16.0"	16.0"	16.0"	16.0"	16.0"	16.0"	16.0"	12.5"	16.0"	16.0"	16.0"	11.5"	7.5"	12.0"	16.0"
		53	16.0"	16.0"	14.0"	16.0"	16.0"	16.0"	14.5"	9.0"	14.0"	16.0"	16.0"	9.0"	6.0"	10.0"	12.5"	16.0"	16.0"	14.5"	16.0"	16.0"	16.0"	15.0"	9.0"	14.5"	16.0"	16.0"	9.5"	6.0"	10.5"	13.0"
		62	16.0"	16.0"	11.5"	16.0"	16.0"	16.0"	11.5"	7.5"	12.0"	16.0"	16.0"	9.0"	6.0"	10.0"	12.5"	16.0"	16.0"	11.5"	16.0"	16.0"	16.0"	11.5"	7.5"	12.0"	16.0"	16.0"	9.5"	6.0"	10.5"	13.0"
		70	16.0"	15.5"	9.5"	15.0"	16.0"	16.0"	9.5"	6.0"	10.5"	13.5"	16.0"	9.0"	6.0"	10.0"	12.5"	16.0"	16.0"	10.0"	15.0"	16.0"	16.0"	10.0"	6.5"	10.5"	14.0"	16.0"	9.5"	6.0"	10.5"	13.0"
		100	16.0"	9.0"	6.0"	10.0"	12.5"	16.0"	9.0"	6.0"	10.0"	12.5"	16.0"	9.0"	6.0"	10.0"	12.5"	16.0"	9.5"	6.0"	10.5"	13.0"	16.0"	9.5"	6.0"	10.5"	13.0"	16.0"	9.5"	6.0"	10.5"	13.0"
	5/16" ELCO ULTRACON WITH 1-3/4" EMBED (3500psi MIN CONC)	43	16.0"	16.0"	16.0"	16.0"	16.0"	16.0"	16.0"	13.5"	16.0"	16.0"	16.0"	12.0"	8.0"	13.5"	16.0"	16.0"	16.0"	16.0"	16.0"	16.0"	16.0"	16.0"	15.0"	16.0"	16.0"	16.0"	13.0"	9.0"	15.0"	16.0"
		53	16.0"	16.0"	16.0"	16.0"	16.0"	16.0"	15.5"	10.0"	16.0"	16.0"	16.0"	9.5"	6.5"	11.5"	13.5"	16.0"	16.0"	16.0"	16.0"	16.0"	16.0"	16.0"	11.0"	16.0"	16.0"	16.0"	10.5"	7.5"	12.5"	15.0"
		62	16.0"	16.0"	12.5"	16.0"	16.0"	16.0"	12.0"	8.0"	14.0"	16.0"	16.0"	9.5"	6.5"	11.5"	13.5"	16.0"	16.0"	14.0"	16.0"	16.0"	16.0"	13.5"	9.0"	15.0"	16.0"	16.0"	10.5"	7.5"	12.5"	15.0"
		70	16.0"	16.0"	10.5"	16.0"	16.0"	16.0"	10.0"	7.0"	12.0"	14.5"	16.0"	9.5"	6.5"	11.5"	13.5"	16.0"	16.0"	11.5"	16.0"	16.0"	16.0"	11.0"	7.5"	13.0"	16.0"	16.0"	10.5"	7.5"	12.5"	15.0"
		100	16.0"	9.5"	6.5"	11.5"	13.5"	16.0"	9.5"	6.5"	11.5"	13.5"	16.0"	9.5"	6.5"	11.5"	13.5"	16.0"	10.5"	7.5"	12.5"	15.0"	16.0"	10.5"	7.5"	12.5"	15.0"	16.0"	10.5"	7.5"	12.5"	15.0"
	1/4" 304 SS POWERS TAPPER W/ 1-3/4" EMBED (3000psi MIN CONC)		1-1/2" MIN EDGE DISTANCE															3" MIN EDGE DISTANCE													
			C1	C2	C3	C4	C5	C1	C2	C3	C4	C5	C1	C2	C3	C4	C5	C1	C2	C3	C4	C5	C1	C2	C3	C4	C5	C1	C2	C3	C4	C5
		43	16.0"	14.5"	6.5"	8.5"	16.0"	12.5"	7.0"	4.0"	6.0"	12.5"	7.0"	3.5"		4.0"	5.5"	16.0"	16.0"	13.5"	16.0"	16.0"	16.0"	14.0"	8.0"	12.0"	16.0"	14.5"	7.5"	4.5"	8.0"	11.5"
		53	14.0"	8.5"	4.5"	6.5"	14.0"	9.0"	4.5"	3.0"	4.5"	9.0"	6.0"	3.0"		3.0"	4.0"	16.0"	16.0"	9.5"	13.5"	16.0"	16.0"	9.5"	6.0"	9.5"	16.0"	12.0"	6.0"	4.0"	6.5"	8.5"
		62	11.5"	6.5"	3.5"	5.5"	12.0"	7.0"	3.5"		4.0"	6.0"	6.0"	3.0"		3.0"	4.0"	16.0"	13.0"	7.5"	11.0"	16.0"	14.5"	7.5"	5.0"	8.0"	12.0"	12.0"	6.0"	4.0"	6.5"	8.5"
		70	9.5"	5.0"	3.0"	5.0"	10.0"	6.0"	3.0"		3.5"	4.5"	6.0"	3.0"		3.0"	4.0"	16.0"	10.5"	6.5"	10.0"	16.0"	12.5"	6.5"	4.0"	7.0"	9.0"	12.0"	6.0"	4.0"	6.5"	8.5"
		100	6.0"	3.0"		3.0"	4.0"	6.0"	3.0"		3.0"	4.0"	6.0"	3.0"		3.0"	4.0"	12.0"	6.0"	4.0"	6.5"	8.5"	12.0"	6.0"	4.0"	6.5"	8.5"	12.0"	6.0"	4.0"	6.5"	8.5"

ANCHOR SCHEDULE: HOLLOW CONCRETE BLOCK

HOST STRUCT.	ANCHOR	LOAD (psf)	1" MIN EDGE DISTANCE															2-1/2" MIN EDGE DISTANCE													
			Spans Up To 6'-0" CONN TYPE					Spans Up To 8'-3" CONN TYPE					Spans Up To 12'-0" CONN TYPE					Spans Up To 6'-0" CONN TYPE					Spans Up To 8'-3" CONN TYPE					Spans Up To 12'-0" CONN TYPE				
			C1	C2	C3	C4	C5	C1	C2	C3	C4	C5	C1	C2	C3	C4	C5	C1	C2	C3	C4	C5	C1	C2	C3	C4	C5	C1	C2	C3	C4	C5
HOLLOW CONCRETE BLOCK	1/4" ITW TAPCON WITH 1-1/4" EMBED	43	8.5"	7.0"		3.5"	8.5"	6.0"	3.5"			6.0"	3.5"					11.5"	10.0"	5.0"	6.5"	11.5"	8.5"	4.5"	3.0"	4.5"	8.5"	4.5"			3.0"	4.0"
		53	7.0"	4.0"			7.0"	4.5"				4.5"						9.5"	6.0"	3.5"	5.0"	9.5"	6.0"	3.0"		3.5"	6.0"	4.0"				
		62	5.5"	3.0"			6.0"	3.5"										8.0"	4.0"		4.5"	8.0"	5.0"			3.0"	4.0"	4.0"				
		70	4.5"				5.0"	3.0"										6.5"	3.5"		3.5"	6.5"	4.0"				3.0"	4.0"				
		100																4.0"					4.0"					4.0"				
	1/4" ELCO ULTRACON WITH 1-1/4" EMBED	43	13.0"	10.5"		6.5"	13.0"	9.0"				9.0"						13.0"	10.5"	4.5"	6.0"	13.0"	9.0"	5.0"	3.0"	4.0"	9.0"	5.0"				4.0"
		53	10.5"	6.5"			10.5"	6.5"				6.5"						10.5"	6.5"	3.5"	5.0"	10.5"	6.5"	3.5"		3.5"	6.5"	4.0"				3.0"
		62	8.5"				9.0"											8.5"	4.5"		4.0"	9.0"	5.0"				4.0"	4.0"				3.0"
		70	7.0"				7.5"											7.0"	3.5"		3.5"	7.5"	4.5"				3.0"	4.0"				3.0"
		100																4.0"				3.0"	4.0"				3.0"	4.0"				3.0"
	1/4" MILLENIUM MILLFAST ANCHOR W/ 1-1/4" EMBED	43	12.5"	10.5"	4.0"	5.0"	12.5"	9.0"	5.0"			9.0"	5.0"				4.0"	13.5"	11.5"	5.5"	7.5"	13.5"	10.0"	5.5"		5.0"	10.0"	5.5"				4.5"
		53	10.0"	6.0"		4.0"	10.0"	6.5"				6.0"	4.0"					11.0"	6.5"	4.0"	5.5"	11.0"	7.0"			4.0"	7.0"	4.5"				
		62	8.0"	4.5"			8.5"	5.0"				4.0"	4.0"					9.0"	5.0"		5.0"	9.5"	5.5"				4.5"	4.5"				
		70	6.5"				7.0"	4.0"					4.0"					7.5"	4.0"		4.0"	8.0"	4.5"					4.5"				
		100	4.0"					4.0"					4.0"					4.5"					4.5"					4.5"				
	1/4" ALL-POINTS SOLID-SET ANCHOR W/ 7/8" EMBED & 1/4-20 SS MACHINE SCREW		1-1/4" MIN EDGE DISTANCE															2" MIN EDGE DISTANCE													
			C1	C2	C3	C4	C5	C1	C2	C3	C4	C5	C1	C2	C3	C4	C5	C1	C2	C3	C4	C5	C1	C2	C3	C4	C5	C1	C2	C3	C4	C5
		43	15.0"	13.0"	5.0"	6.0"	15.0"	11.0"	6.0"	3.0"	4.0"	11.0"	6.0"	3.0"			5.0"	16.0"	16.0"	8.5"	10.0"	16.0"	16.0"	10.5"	5.0"	7.0"	16.0"	11.0"	5.5"	3.0"	4.5"	8.5"
		53	12.5"	7.5"	3.5"	4.5"	12.5"	8.0"	4.0"		3.5"	8.0"	5.0"				3.5"	16.0"	13.0"	6.0"	8.0"	16.0"	14.0"	7.5"	4.0"	5.5"	13.5"	9.0"	4.5"		4.0"	6.5"
		62	10.0"	5.5"		4.0"	10.5"	6.5"	3.0"			5.0"	5.0"				3.5"	16.0"	9.5"	5.0"	6.5"	16.0"	11.0"	5.5"	3.0"	4.5"	9.0"	9.0"	4.5"		4.0"	6.5"
		70	8.5"	4.5"		3.5"	9.0"	5.5"				4.0"	5.0"				3.5"	14.5"	8.0"	4.0"	6.0"	15.5"	9.5"	4.5"		4.0"	7.0"	9.0"	4.5"		4.0"	6.5"
		100	5.0"				3.5"	5.0"				3.5"	5.0"				3.5"	9.0"	4.5"		4.0"	6.5"	9.0"	4.5"		4.0"	6.5"	9.0"	4.5"		4.0"	6.5"
	5/16" ITW TAPCON XL WITH 1-3/4" EMBED		3" MIN EDGE DISTANCE															4" MIN EDGE DISTANCE													
			C1	C2	C3	C4	C5	C1	C2	C3	C4	C5	C1	C2	C3	C4	C5	C1	C2	C3	C4	C5	C1	C2	C3	C4	C5	C1	C2	C3	C4	C5
		43																16.0"	16.0"	9.0"	12.0"	16.0"	14.0"	7.5"	5.0"	8.5"	14.0"	8.0"	4.0"	3.0"	5.5"	6.5"
		53																15.5"	9.5"	6.0"	9.5"	15.5"	10.0"	5.0"		6.5"	10.0"	6.5"			4.5"	4.5"
		62																13.0"	7.0"	4.5"	8.0"	13.0"	8.0"	4.0"		5.5"	6.5"	6.5"			4.5"	4.5"
		70																10.5"	5.5"	4.0"	7.0"	11.0"	6.5"			5.0"	5.0"	6.5"			4.5"	4.5"
		100																6.5"	3.0"		4.5"	4.5"	6.5"			4.5"	4.5"	6.5"			4.5"	4.5"
	5/16" ELCO ULTRACON WITH 1-1/4" EMBED		1-9/16" MIN EDGE DISTANCE															3-1/8" MIN EDGE DISTANCE													
			C1	C2	C3	C4	C5	C1	C2	C3	C4	C5	C1	C2	C3	C4	C5	C1	C2	C3	C4	C5	C1	C2	C3	C4	C5	C1	C2	C3	C4	C5
		43	12.0"	10.0"			12.0"	8.5"				8.5"						16.0"	16.0"	8.5"	11.0"	16.0"	15.0"	8.5"		7.5"	15.0"	8.5"				7.0"
		53	9.5"	6.0"			9.5"	6.0"				6.0"						16.0"	10.5"	6.0"	8.5"	16.0"	11.0"			6.0"	10.5"	7.0"				
		62	8.0"				8.0"											14.0"	7.5"		7.0"	14.5"	8.5"				7.0"	7.0"				
		70	6.5"				7.0"											11.5"	6.0"		6.0"	12.0"	7.0"					7.0"				
		100																7.0"					7.0"					7.0"				

ANCHOR NOTES: SEE SHEET 9 FOR ANCHOR NOTES.

FRANK L. BENNARDO, P.E. #96064
STATE OF TEXAS
FRANK L. BENNARDO
96064
LICENSED
PROFESSIONAL ENGINEER
01/03/2019

ENGINEERING EXPRESS®
CORPORATE OFFICE:
160 SW 12th AVE, SUITE 106
DEERFIELD BEACH, FL 33442
P: (954) 354-0660 F: (954) 354-0443
E: HELLO@ENGINEERINGEXPRESS.COM
ENGINEERINGEXPRESS.COM
CERT OF AUTH #F-11383

Town & Country INDUSTRIES
Wholesale Aluminum and Building Products
A Division of AGC Supply Co., Inc.
400 WEST MCNAB ROAD
FT. LAUDERDALE, FL 33309

REMARKS	DRWN	CHKD	DATE
INIT ISSUE	KL	FLB	01/24/18
-	-	-	-
-	-	-	-
-	-	-	-

THIS DOCUMENT IS THE PROPERTY OF FRANK L. BENNARDO, P.E AND SHALL NOT BE REPRODUCED IN WHOLE OR PART WITHOUT WRITTEN CONSENT OF FRANK L. BENNARDO, P.E. " ALTERATIONS, ADDITIONS, HIGHLIGHTING, OR OTHER MARKINGS TO THIS DOCUMENT ARE NOT PERMITTED AND INVALIDATE OUR CERTIFICATION.

COPYRIGHT FRANK L. BENNARDO P.E.

15-2339

SCALE: -

PAGE DESCRIPTION:
-
-

01/03/2019 - 9:05am rickn V:\projects\15-2339 6.8 Streamline - FSA - Update FL13757.2 for 2014 Florida Bldg Code-Project\WP\TDI Submittal\15-2339d-Dwg-TDI.dwg

ANCHOR SCHEDULE: HOLLOW CONCRETE BLOCK

HOST STRUCT.	ANCHOR	LOAD (psf)	2" MIN EDGE DISTANCE														
			Spans Up To 6'-0" CONN TYPE					Spans Up To 8'-3" CONN TYPE					Spans Up To 12'-0" CONN TYPE				
			C1	C2	C3	C4	C5	C1	C2	C3	C4	C5	C1	C2	C3	C4	C5
HOLLOW BLOCK	#12 SMS W/ 2" EYEWALL ARMOR INSERT W/ 1-1/4" EMBED 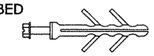	43	16.0"	16.0"	7.5"	9.0"	16.0"	15.5"	8.5"	4.5"	6.5"	15.5"	8.5"	4.5"		4.0"	7.0"
		53	16.0"	10.5"	5.0"	7.0"	16.0"	11.0"	6.0"	3.5"	5.0"	11.0"	7.0"	3.5"		3.5"	5.0"
		62	14.0"	7.5"	4.0"	6.0"	14.5"	9.0"	4.5"		4.0"	7.0"	7.0"	3.5"		3.5"	5.0"
		70	11.5"	6.0"	3.5"	5.5"	12.5"	7.5"	3.5"		3.5"	5.5"	7.0"	3.5"		3.5"	5.0"
		100	7.0"	3.5"		3.5"	5.0"	7.0"	3.5"		3.5"	5.0"	7.0"	3.5"		3.5"	5.0"

ANCHOR SCHEDULE: WOOD (G=0.55)

HOST STRUCT.	ANCHOR	LOAD (psf)	3/4" MIN EDGE DISTANCE														
			Spans Up To 6'-0" CONN TYPE					Spans Up To 8'-3" CONN TYPE					Spans Up To 12'-0" CONN TYPE				
			C1	C2	C3	C4	C5	C1	C2	C3	C4	C5	C1	C2	C3	C4	C5
WOOD (G=0.55)	1/4" LAG SCREW WITH 1-3/4" MIN THREAD PENETRATION 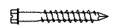	43	16.0"	16.0"	11.5"	12.5"	16.0"	16.0"	16.0"	7.5"	9.0"	16.0"	16.0"	14.5"	4.5"	6.0"	16.0"
		53	16.0"	16.0"	8.5"	10.0"	16.0"	16.0"	16.0"	6.0"	7.0"	16.0"	16.0"	11.5"	4.0"	5.0"	16.0"
		62	16.0"	16.0"	7.0"	8.5"	16.0"	16.0"	14.5"	5.0"	6.0"	16.0"	16.0"	11.5"	4.0"	5.0"	16.0"
		70	16.0"	16.0"	6.0"	7.5"	16.0"	16.0"	12.5"	4.0"	5.5"	16.0"	16.0"	11.5"	4.0"	5.0"	16.0"
		100	16.0"	11.5"	4.0"	5.0"	16.0"	16.0"	11.5"	4.0"	5.0"	16.0"	16.0"	11.5"	4.0"	5.0"	16.0"
	7/16" WOOD BUSHING WITH 1.13" MIN EMBED & 1/4-20 SS MACHINE SCREW	43	16.0"	16.0"	8.0"	10.0"	16.0"	15.5"	8.5"	4.5"	7.0"	15.5"	8.5"	4.5"		4.5"	7.0"
		53	16.0"	10.5"	5.5"	8.0"	16.0"	11.0"	6.0"	3.5"	5.5"	11.0"	7.0"	3.5"		4.0"	5.0"
		62	14.0"	8.0"	4.5"	6.5"	14.5"	9.0"	4.5"	3.0"	4.5"	7.0"	7.0"	3.5"		4.0"	5.0"
		70	12.0"	6.0"	3.5"	5.5"	12.5"	7.5"	3.5"		4.0"	5.5"	7.0"	3.5"		4.0"	5.0"
		100	7.0"	3.5"		4.0"	5.0"	7.0"	3.5"		4.0"	5.0"	7.0"	3.5"		4.0"	5.0"
	#14 SMS OR #14 WOOD SCREW WITH 1-3/4" MIN THREAD PENETRATION 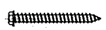	43	16.0"	16.0"	12.5"	14.5"	16.0"	16.0"	16.0"	8.0"	10.0"	16.0"	16.0"	11.5"	5.0"	7.0"	16.0"
		53	16.0"	16.0"	9.0"	11.5"	16.0"	16.0"	15.0"	6.0"	8.0"	16.0"	16.0"	9.5"	4.0"	5.5"	13.0"
		62	16.0"	16.0"	7.5"	9.5"	16.0"	16.0"	11.5"	5.0"	7.0"	16.0"	16.0"	9.5"	4.0"	5.5"	13.0"
		70	16.0"	16.0"	6.5"	8.5"	16.0"	16.0"	10.0"	4.5"	6.0"	14.0"	16.0"	9.5"	4.0"	5.5"	13.0"
		100	16.0"	9.5"	4.0"	5.5"	13.0"	16.0"	9.5"	4.0"	5.5"	13.0"	16.0"	9.5"	4.0"	5.5"	13.0"

ANCHOR SCHEDULE: WOOD (G=0.42)

HOST STRUCT.	ANCHOR	LOAD (psf)	3/4" MIN EDGE DISTANCE														
			Spans Up To 6'-0" CONN TYPE					Spans Up To 8'-3" CONN TYPE					Spans Up To 12'-0" CONN TYPE				
			C1	C2	C3	C4	C5	C1	C2	C3	C4	C5	C1	C2	C3	C4	C5
WOOD (G=0.42)	1/4" LAG SCREW WITH 1-3/4" MIN THREAD PENETRATION 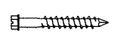	43	16.0"	16.0"	9.0"	10.0"	16.0"	16.0"	16.0"	5.5"	7.0"	16.0"	16.0"	9.5"	3.5"	4.5"	15.0"
		53	16.0"	16.0"	6.5"	8.0"	16.0"	16.0"	12.5"	4.5"	5.5"	16.0"	15.0"	7.5"	3.0"	4.0"	11.0"
		62	16.0"	16.0"	5.5"	6.5"	16.0"	16.0"	9.5"	3.5"	5.0"	15.0"	15.0"	7.5"	3.0"	4.0"	11.0"
		70	16.0"	13.5"	4.5"	6.0"	16.0"	16.0"	8.0"	3.0"	4.0"	11.5"	15.0"	7.5"	3.0"	4.0"	11.0"
		100	15.0"	7.5"	3.0"	4.0"	11.0"	15.0"	7.5"	3.0"	4.0"	11.0"	15.0"	7.5"	3.0"	4.0"	11.0"
	#14 SMS OR #14 WOOD SCREW WITH 1-3/4" MIN THREAD PENETRATION 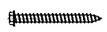	43	16.0"	16.0"	8.5"	10.5"	16.0"	16.0"	12.5"	5.5"	7.0"	16.0"	13.0"	6.5"	3.5"	5.0"	10.5"
		53	16.0"	16.0"	6.5"	8.0"	16.0"	16.0"	8.5"	4.0"	5.5"	16.0"	10.5"	5.5"	2.5"	4.0"	7.5"
		62	16.0"	11.5"	5.0"	7.0"	16.0"	13.0"	6.5"	3.5"	5.0"	10.5"	10.5"	5.5"	2.5"	4.0"	7.5"
		70	16.0"	9.5"	4.5"	6.0"	16.0"	11.0"	5.5"	3.0"	4.0"	8.0"	10.5"	5.5"	2.5"	4.0"	7.5"
		100	10.5"	5.5"	2.5"	4.0"	7.5"	10.5"	5.5"	2.5"	4.0"	7.5"	10.5"	5.5"	2.5"	4.0"	7.5"

ANCHOR SCHEDULE: GROUT-FILLED CONCRETE BLOCK

HOST STRUCT.	ANCHOR	LOAD (psf)	4" MIN EDGE DISTANCE														
			Spans Up To 6'-0" CONN TYPE					Spans Up To 8'-3" CONN TYPE					Spans Up To 12'-0" CONN TYPE				
			C1	C2	C3	C4	C5	C1	C2	C3	C4	C5	C1	C2	C3	C4	C5
GROUT-FILLED CONRETE BLOCK	5/16" ITW TAPCON XL W/ 2-1/4" MIN. EMBED 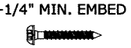	43	16.0"	16.0"	16.0"	16.0"	16.0"	16.0"	16.0"	15.0"	16.0"	16.0"	16.0"	15.0"	9.0"	14.0"	16.0"
		53	16.0"	16.0"	16.0"	16.0"	16.0"	16.0"	16.0"	11.0"	16.0"	16.0"	16.0"	12.0"	7.5"	12.0"	16.0"
		62	16.0"	16.0"	14.0"	16.0"	16.0"	16.0"	15.0"	9.0"	14.0"	16.0"	16.0"	12.0"	7.5"	12.0"	16.0"
		70	16.0"	16.0"	11.5"	16.0"	16.0"	16.0"	12.5"	8.0"	12.5"	16.0"	16.0"	12.0"	7.5"	12.0"	16.0"
		100	16.0"	12.0"	7.5"	12.0"	16.0"	16.0"	12.0"	7.5"	12.0"	16.0"	16.0"	12.0"	7.5"	12.0"	16.0"
	5/16" ELCO ULTRACON W/ 2-1/4" MIN. EMBED	43	16.0"	16.0"	10.5"	14.0"	16.0"	16.0"	10.5"	6.5"	9.5"	16.0"	11.0"	5.5"		6.5"	9.0"
		53	16.0"	13.5"	7.5"	11.0"	16.0"	14.0"	7.5"		7.5"	13.5"	9.0"				6.5"
		62	16.0"	10.0"	6.0"	9.0"	16.0"	11.0"	5.5"		6.5"	9.0"	9.0"				6.5"
		70	15.0"	8.0"	5.0"	8.0"	15.5"	9.5"			5.5"	7.0"	9.0"				6.5"
		100	9.0"			5.5"	6.5"	9.0"			5.5"	6.5"	9.0"				6.5"
			2" MIN EDGE DISTANCE														
			C1	C2	C3	C4	C5	C1	C2	C3	C4	C5	C1	C2	C3	C4	C5
	#12 SMS W/ 2" EYEWALL ARMOR INSERT W/ 2" EMBED 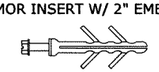	43	16.0"	16.0"	9.5"	11.5"	16.0"	16.0"	14.0"	6.0"	8.0"	16.0"	14.5"	7.5"	3.5"	5.5"	11.5"
		53	16.0"	16.0"	7.0"	9.0"	16.0"	16.0"	9.5"	4.5"	6.5"	16.0"	11.5"	6.0"	3.0"	4.5"	8.5"
		62	16.0"	13.0"	5.5"	7.5"	16.0"	14.5"	7.5"	3.5"	5.5"	12.0"	11.5"	6.0"	3.0"	4.5"	8.5"
		70	16.0"	10.5"	5.0"	6.5"	16.0"	12.5"	6.5"	3.0"	4.5"	9.0"	11.5"	6.0"	3.0"	4.5"	8.5"
		100	11.5"	6.0"	3.0"	4.5"	8.5"	11.5"	6.0"	3.0"	4.5"	8.5"	11.5"	6.0"	3.0"	4.5"	8.5"

ANCHOR NOTES: SEE SHEET 9 FOR ANCHOR NOTES.

STATE OF TEXAS
FRANK L. BENNARDO
96064
LICENSED
PROFESSIONAL ENGINEER
01/03/2019

FRANK L. BENNARDO, P.E.
PE96064

ENGINEERING EXPRESS®
CORPORATE OFFICE:
160 SW 12th AVE, SUITE 106
DEERFIELD BEACH, FL 33442
P: (954) 354-0660 F: (954) 354-0443
E: HELLO@ENGINEERINGEXPRESS.COM
ENGINEERINGEXPRESS.COM
CERT OF AUTH #F-11383

Town & Country INDUSTRIES
Wholesale Aluminum and Building Products
A Division of ABC Supply Co., Inc.
400 WEST MCNAB ROAD
FT. LAUDERDALE, FL 33309

REMARKS	DRWN	CHKD	DATE
INIT ISSUE	KL	FLB	01/24/18

THIS DOCUMENT IS THE PROPERTY OF FRANK L. BENNARDO, P.E. AND SHALL NOT BE REPRODUCED IN WHOLE OR PART WITHOUT WRITTEN CONSENT OF FRANK L. BENNARDO, P.E. - ALTERATIONS, ADDITIONS, HIGHLIGHTING OR OTHER MARKINGS TO THIS DOCUMENT ARE NOT PERMITTED AND INVALIDATE SEAL CERTIFICATION.

COPYRIGHT FRANK L. BENNARDO P.E.

15-2339

SCALE: - -

PAGE DESCRIPTION:
-
-

V:\projects\15-2339 6.8 Streamline - FSA - Update FL13757.2 for 2014 Florida Bldg Code-Project\WP\TDI Submittal\15-2339d-Dwg-TDI.dwg
01/03/2019 - 9:05am rickn