515 N. Fraley Street
Kane, PA 16735
Ph. (814) 837-6464

Van Guard II
Aluminum Hurricane Barrier
Outswing
"Impact"

14 GA. GALVANIZED STEEL SCREEN

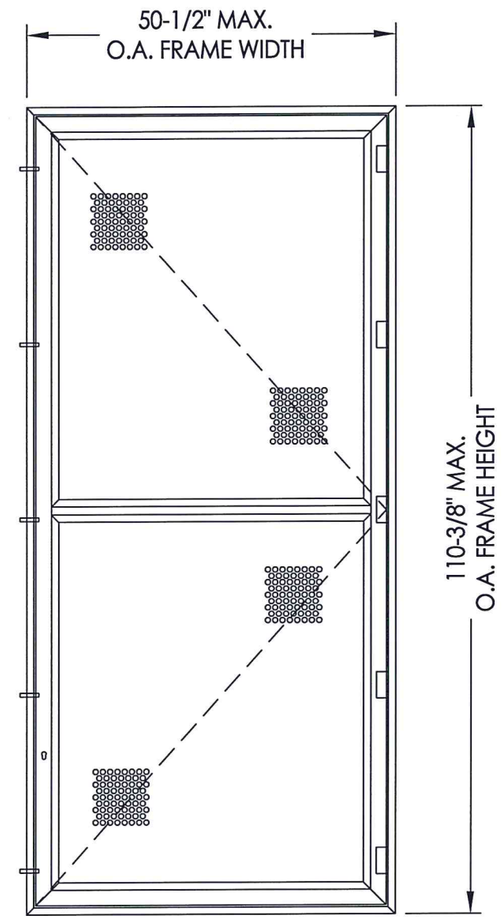

EVALUATED FOR USE IN THE STATE OF TEXAS

The Kane Security Screens Protective System described herein complies with the 2006 International Residential Code (IRC), Sections R301 & R613 and the 2006 International Building Code (IBC), Sections 1405.12, 1609 and 1714.5 (including Texas revisions) subject to the following conditions:

1. Anchors shall be as listed and spaced as shown in the details. Anchor embedment to base material shall be beyond wall dressing or stucco.
2. This system has been tested and evaluated as a large missile impact protective system for installation in the Seaward, Inland I and Inland II areas. This product meets missile level "D" and includes Wind Zone 4 as defined in ASTM E 1996.
3. Allowable design pressure requirements must be equal to or less than the design pressure rating shown in the design pressure chart, sheet 1 of this drawing.
4. Conditions not covered by this drawing are subject to further engineering analysis.

TABLE OF CONTENTS

SHEET #	DESCRIPTION
1	Typical elevation, design pressures & general notes
2	Barrier panel sections, components & screen details
3	Reveal mount sections - masonry wall
4	Surface mount sections - masonry wall
5	Reveal mount sections - 2x wood framing
6	Surface mount sections - 2x wood framing
7	Frame anchoring - masonry wall
8	Frame anchoring - 2x wood framing
9	Bill of materials, components & lock release options

MOUNTING STYLE	OVERALL FRAME DIMENSION	SCREEN OPENING DIMENSION	SWING	DESIGN PRESSURE (PSF)	
				POSITIVE	NEGATIVE
REVEAL MOUNT	50.50" x 110.375"	41.78" x 49.18"	OUTSWING	50.0	50.0
SURFACE MOUNT				50.0	50.0

STATE OF TEXAS
LYNDON F. SCHMIDT
104123
LICENSED
PROFESSIONAL ENGINEER
6-21-17

Documents Prepared By: Lyndon F. Schmidt, P.E.
TEXAS P.E. #104123
RW BUILDING CONSULTANTS, INC.
P.O. Box 230 Valrico FL. 33595
Phone No.: 813.659.9197
TEXAS BOARD OF PROFESSIONAL ENGINEERS
CERTIFICATE OF REGISTRATION # F-11852

PRODUCT: KANE SCREENS VAN GUARD II ALUMINUM HURRICANE BARRIER

PART OR ASSEMBLY: TYPICAL ELEVATION, DESIGN PRESSURES & GENERAL NOTES

NO.	DATE	REVISIONS	BY

DATE: 6/21/16
SCALE: N.T.S.
DWG. BY: JK
CHK. BY: LFS
DRAWING NO.: TX-4617
SHEET 1 OF 9

© 2016 R.W. Building Consultants Inc.

R:\Clients\Kane PERMANENT\B - Texas Dept of Ins\GS - Van Guard II Aluminum Hurricane Barrier, Outswing, Single, Impact Resistant (SUB ID 6307)\Drawings\TX-4617.dwg, TX-4617

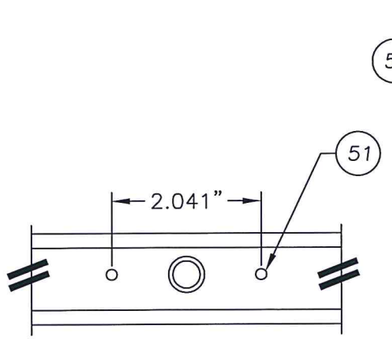

30 LOCK
LOCK TO MAIN FRAME ATTACHMENT

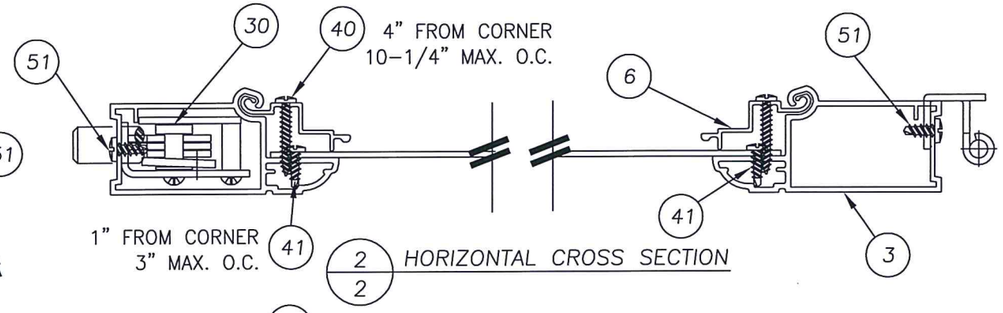

2/2 HORIZONTAL CROSS SECTION

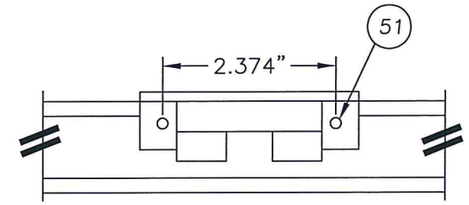

31 HINGE
HINGE TO MAIN FRAME ATTACHMENT

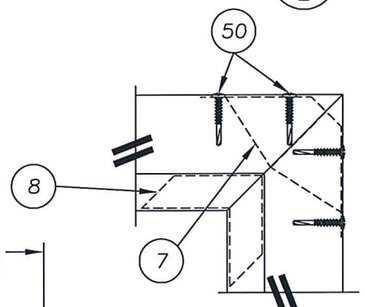

CORNER ASS'Y DETAIL

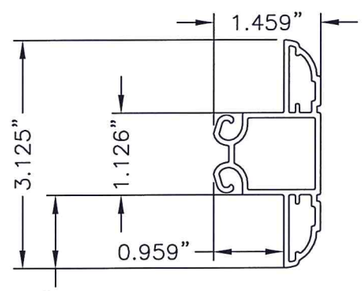

5 HORIZONTAL BRACE

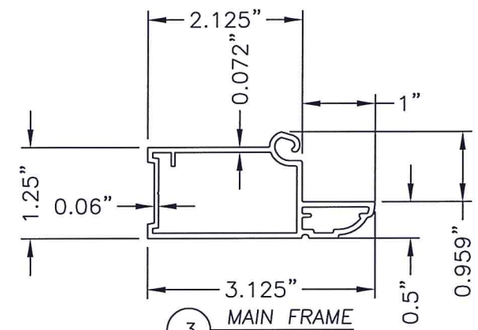

3 MAIN FRAME

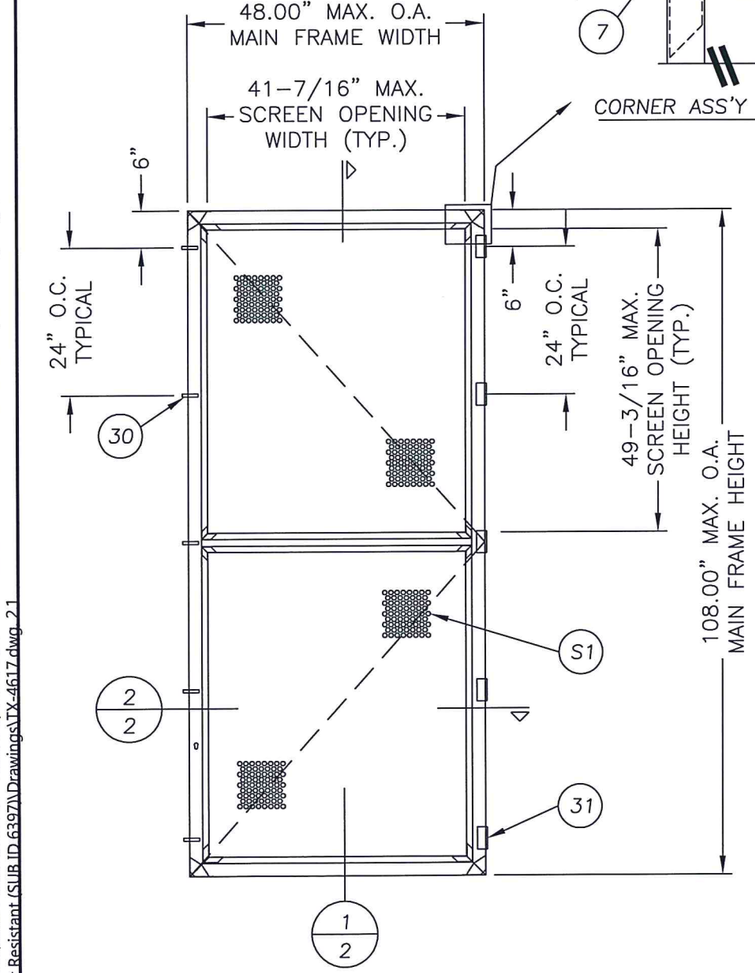

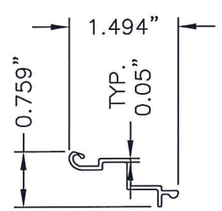

6 MAIN FRAME COVER

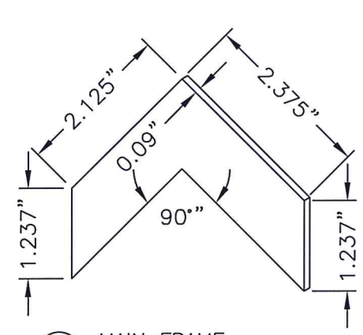

8 MAIN FRAME SECONDARY CORNER KEY

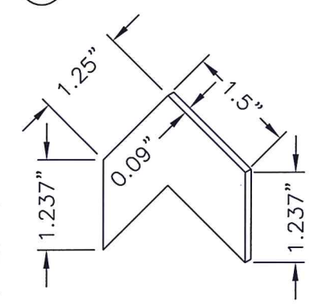

9 HORIZONTAL BRACE CORNER KEY

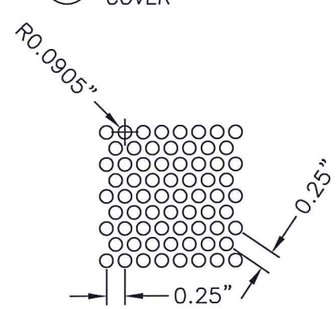

S1 SCREEN DETAIL
14 GA. (0.0785") GALVANNEALED STEEL
(Min. Fy = 38,000 PSI)
(OPEN AREA = 51%)

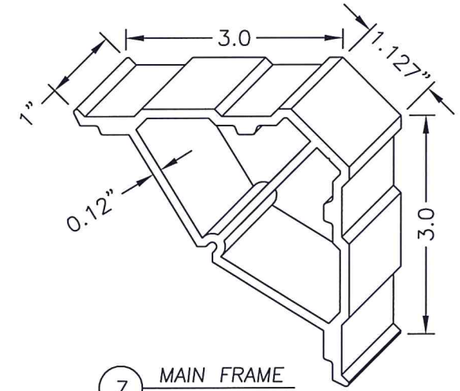

7 MAIN FRAME CORNER KEY

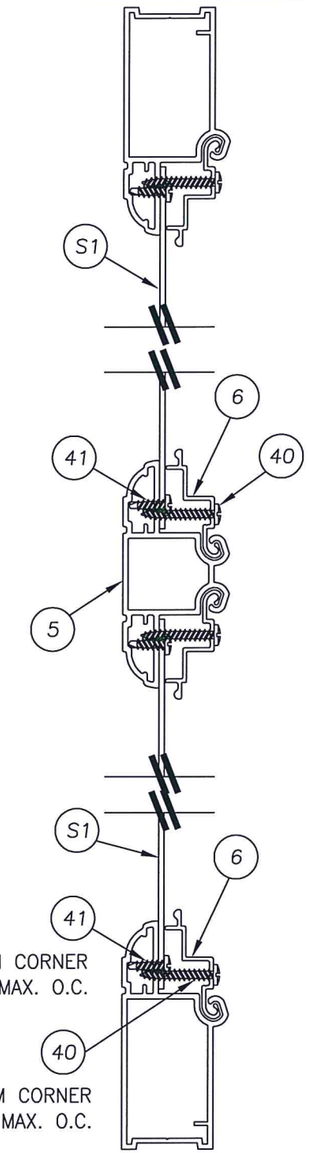

1/2 VERTICAL CROSS SECTION

STATE OF TEXAS
LYNDON F. SCHMIDT
104123
LICENSED
PROFESSIONAL ENGINEER
2.5.17

Documents Prepared By: Lyndon F. Schmidt, P.E.
TEXAS P.E. #104123

RW BUILDING CONSULTANTS, INC.
P.O. Box 230 Valrico FL. 33595
Phone No.: 813.659.9197

TEXAS BOARD OF PROFESSIONAL ENGINEERS
CERTIFICATE OF REGISTRATION # F-11852

PRODUCT: KANE SCREENS VAN GUARD II ALUMINUM HURRICANE BARRIER

PART OR ASSEMBLY: BARRIER PANEL SECTIONS, COMPONENTS & SCREEN DETAILS

NO.	DATE	BY

REVISIONS

DATE: 6/21/16
SCALE: N.T.S.
DWG. BY: JK
CHK. BY: LFS
DRAWING NO.: TX-4617
SHEET 2 OF 9

© 2016 R.W. BUILDING CONSULTANTS INC.

R:\Clients\Kane PERMANENT\B - Texas Dept of Ins\GS - Van Guard II Aluminum Hurricane Barrier, Outswing, Single, Impact Resistant (SUB ID 6397)\Drawings\TX-4617.dwg, 21

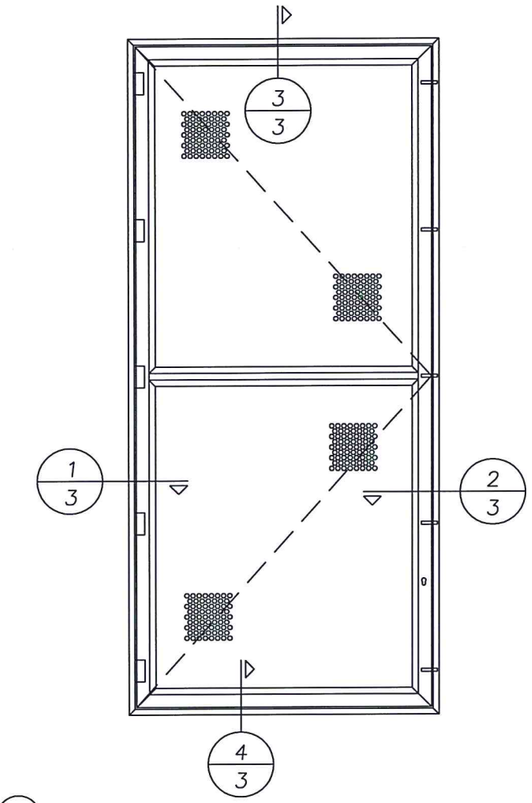

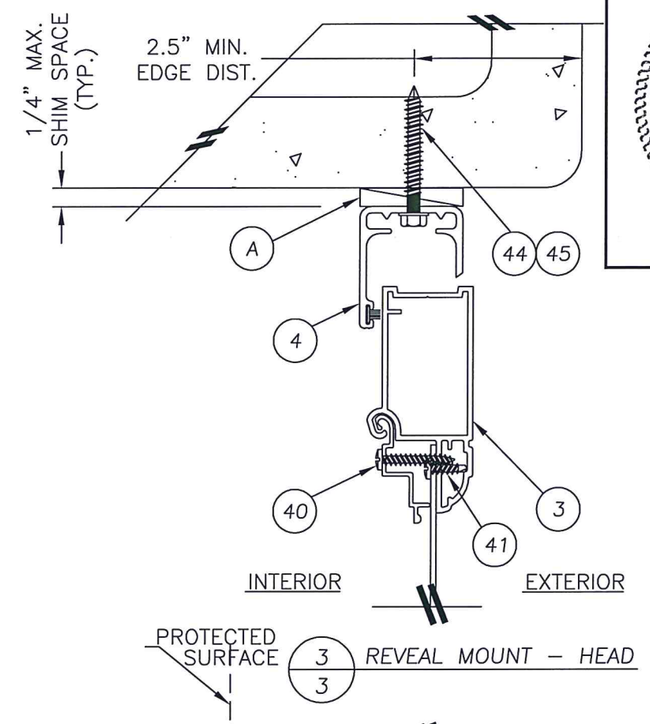

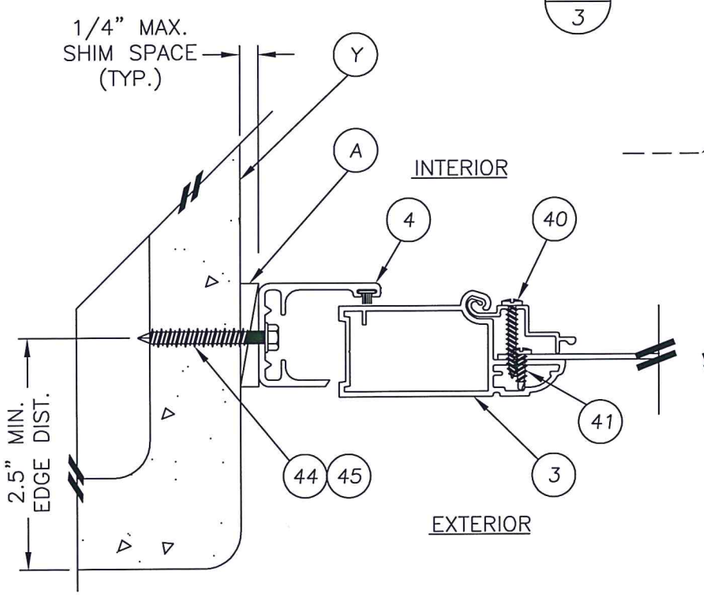

1/3 REVEAL MOUNT – HINGE JAMB
HINGE REMOVED FOR CLARITY

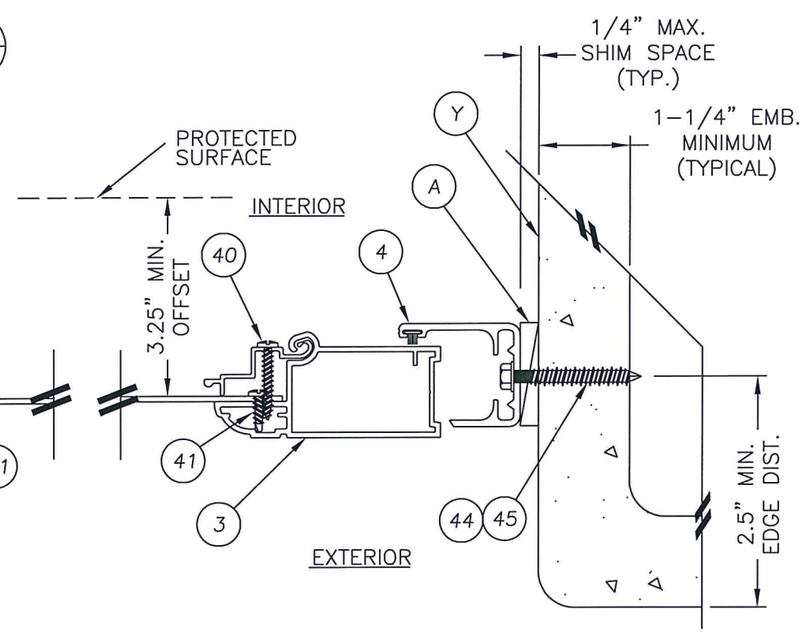

2/3 REVEAL MOUNT – STRIKE JAMB
LOCK REMOVED FOR CLARITY

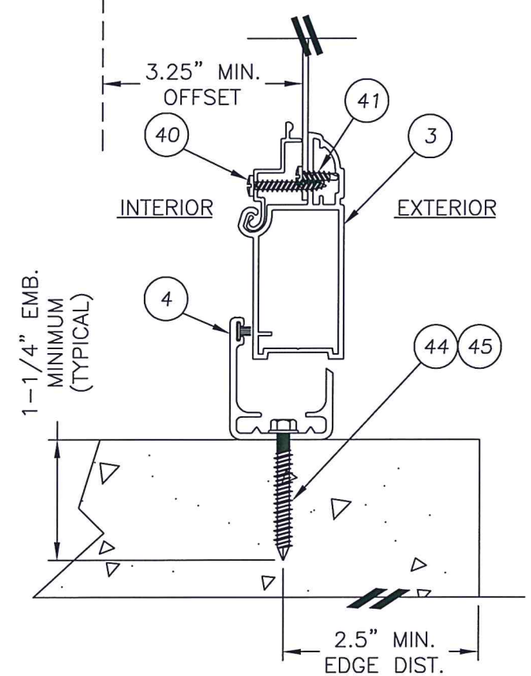

4/3 REVEAL MOUNT – BASE

STATE OF TEXAS
LYNDON F. SCHMIDT
104123
LICENSED
PROFESSIONAL ENGINEER

Documents Prepared By: Lyndon F. Schmidt, P.E.
TEXAS P.E. #104123
RW BUILDING CONSULTANTS, INC.
P.O. Box 230 Valrico FL. 33595
Phone No.: 813.659.9197
TEXAS BOARD OF PROFESSIONAL ENGINEERS
CERTIFICATE OF REGISTRATION # F-11852

PRODUCT: KANE SCREENS VAN GUARD II ALUMINUM HURRICANE BARRIER

PART OR ASSEMBLY: REVEAL MOUNT SECTIONS MASNORY WALLS

NO.	DATE	BY

REVISIONS

DATE: 6/21/16
SCALE: N.T.S.
DWG. BY: JK
CHK. BY: LFS
DRAWING NO.: TX-4617
SHEET 3 OF 9

© 2016 R.W. BUILDING CONSULTANTS INC.

R:\Clients\Kane PERMANENT\B - Texas Dept of Ins\GS - Van Guard II Aluminum Hurricane Barrier, Outswing, Single, Impact Resistant (SUB ID 6397)\Drawings\TX-4617.dwg, 3.1

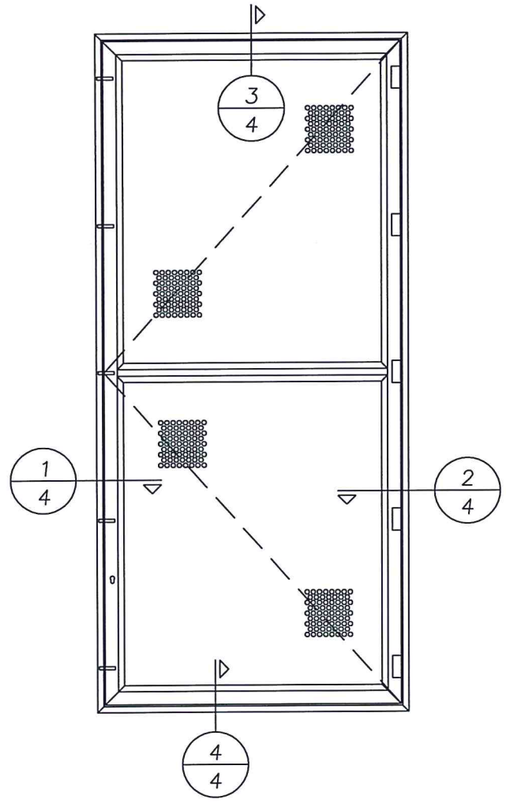

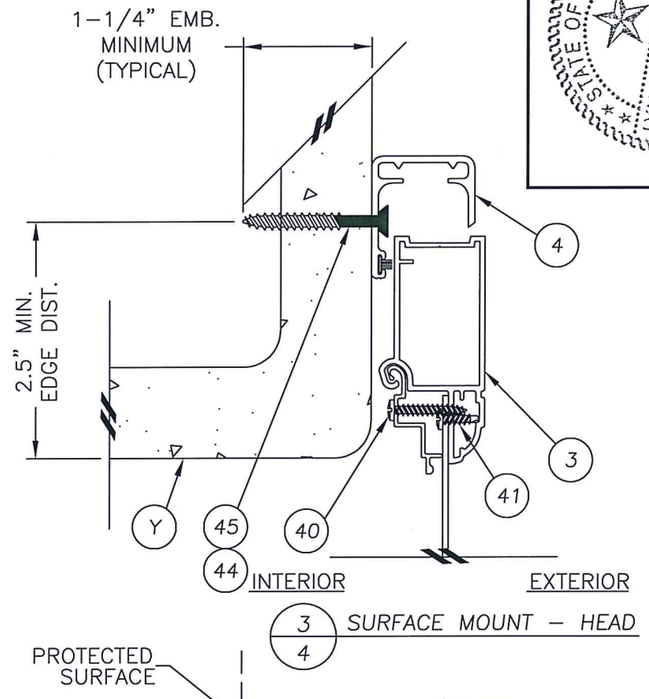

3/4 SURFACE MOUNT – HEAD

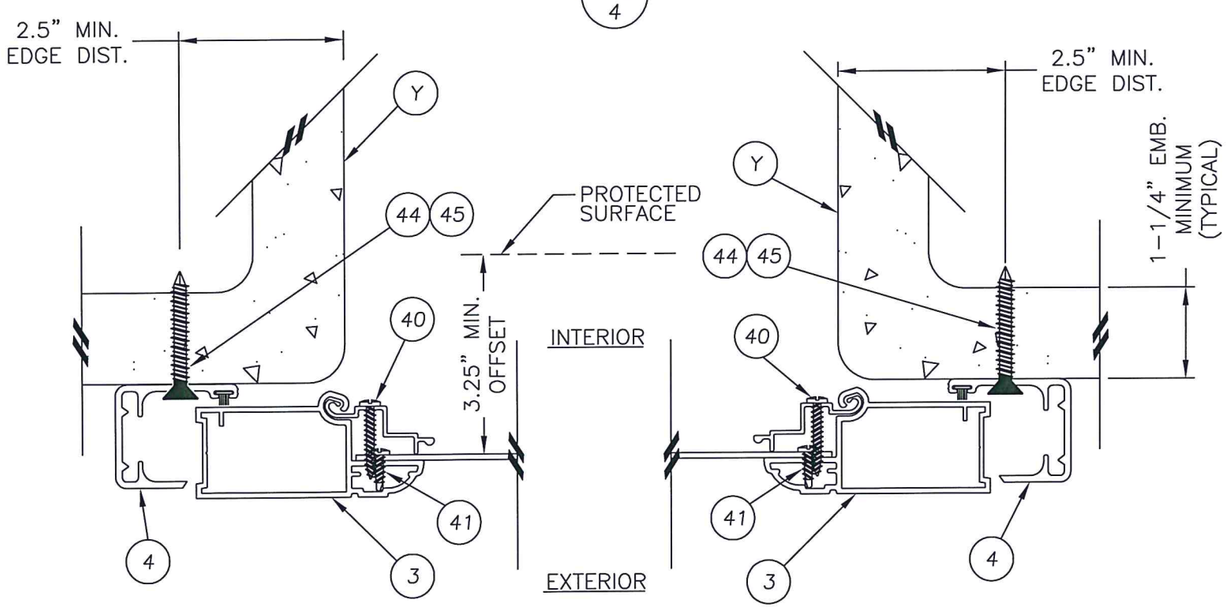

1/4 SURFACE MOUNT – STRIKE JAMB
LOCK ASS'Y REMOVED FOR CLARITY

2/4 SURFACE MOUNT – HINGE JAMB
HINGE REMOVED FOR CLARITY

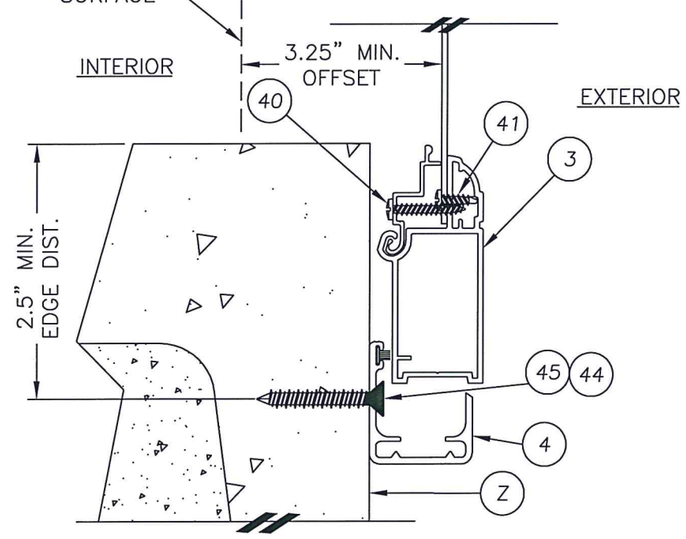

4/4 SURFACE MOUNT – BASE

STATE OF TEXAS
LYNDON F. SCHMIDT
104123
LICENSED
PROFESSIONAL ENGINEER
2.5.17

Documents Prepared By: Lyndon F. Schmidt, P.E.
TEXAS P.E. #104123

RW BUILDING CONSULTANTS, INC.
P.O. Box 230 Valrico FL. 33595
Phone No.: 813.659.9197

TEXAS BOARD OF PROFESSIONAL ENGINEERS
CERTIFICATE OF REGISTRATION # F-11852

PRODUCT: KANE SCREENS VAN GUARD II ALUMINUM HURRICANE BARRIER

PART OR ASSEMBLY: SURFACE MOUNT SECTIONS MASONRY WALLS

NO.	DATE	REVISIONS	BY

DATE: 6/21/16
SCALE: N.T.S.
DWG. BY: JK
CHK. BY: LFS
DRAWING NO.: TX-4617
SHEET 4 OF 9

© 2016 R.W. BUILDING CONSULTANTS INC.

R:\Clients\Kane PERMANENT\B - Texas Dept of Ins\GS - Van Guard II Aluminum Hurricane Barrier, Outswing, Single, Impact Resistant (SUB ID 6397)\Drawings\TX-4617.dwg, 4.1

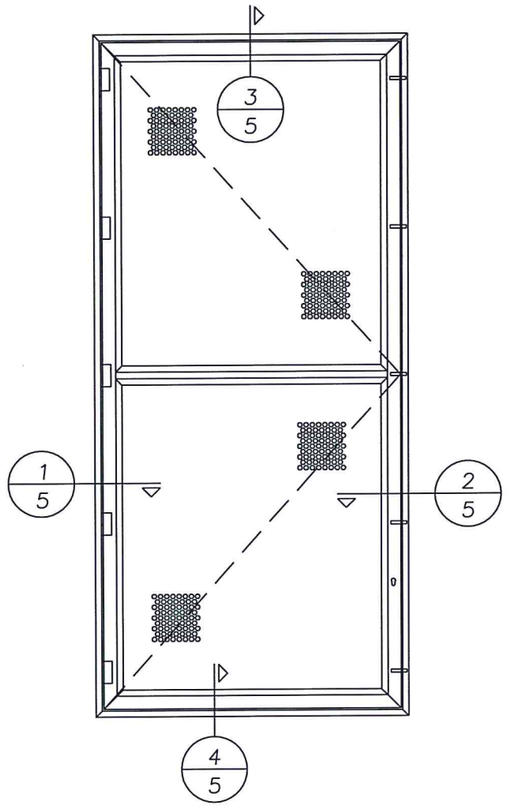

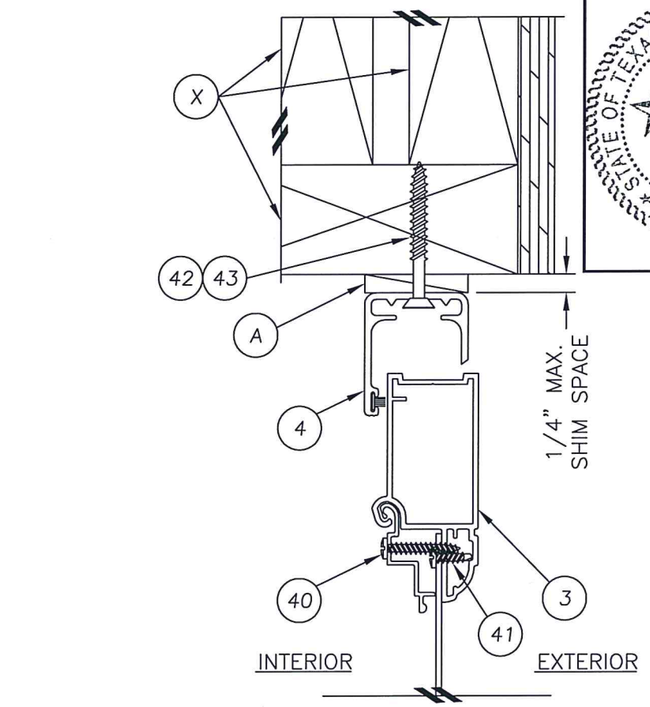

3/5 REVEAL MOUNT – HEAD

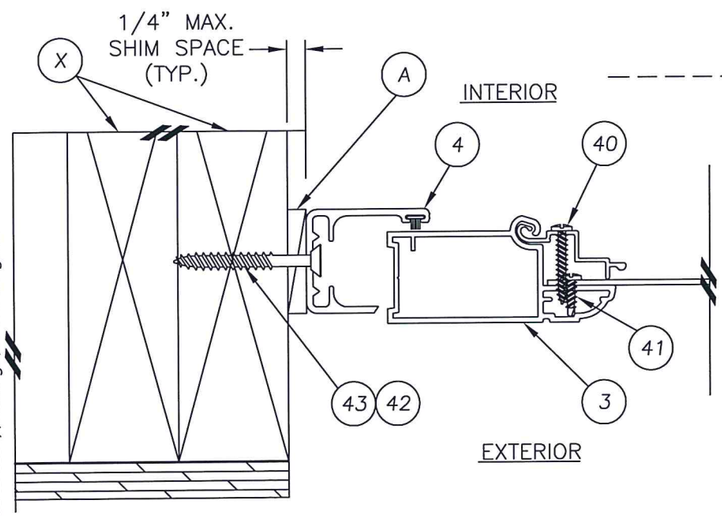

1/5 REVEAL MOUNT – HINGE JAMB
HINGE REMOVED FOR CLARITY

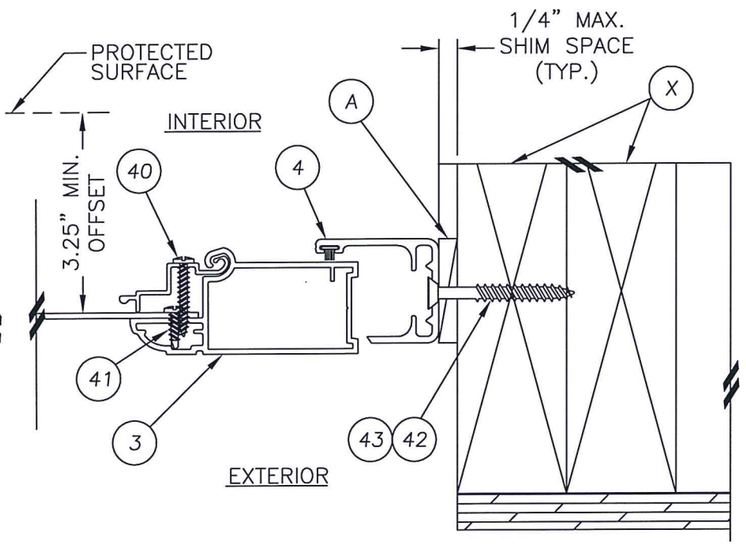

2/5 REVEAL MOUNT – STRIKE JAMB
LOCK REMOVED FOR CLARITY

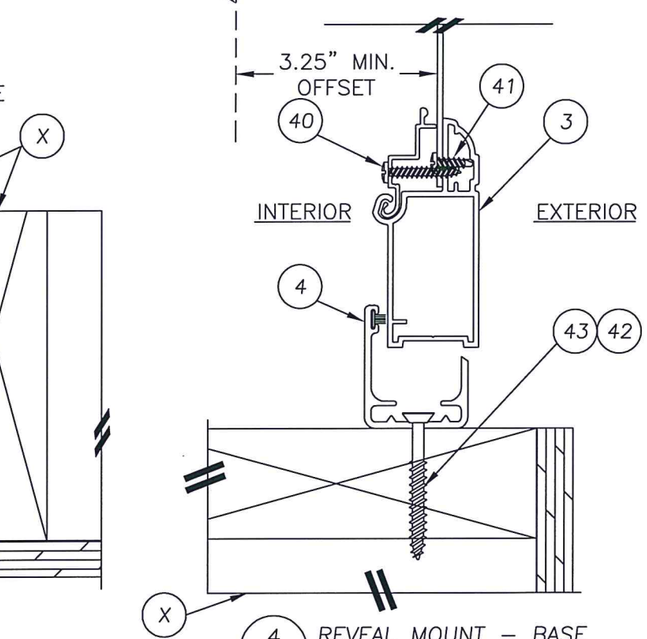

4/5 REVEAL MOUNT – BASE

STATE OF TEXAS
LYNDON F. SCHMIDT
104123
LICENSED
PROFESSIONAL ENGINEER
2-15-17

Documents Prepared By: Lyndon F. Schmidt, P.E.
TEXAS P.E. #104123

RW BUILDING CONSULTANTS, INC.
P.O. Box 230 Valrico FL. 33595
Phone No.: 813.659.9197

TEXAS BOARD OF PROFESSIONAL ENGINEERS
CERTIFICATE OF REGISTRATION # F-11852

PRODUCT:
KANE SCREENS
VAN GUARD II
ALUMINUM HURRICANE BARRIER

PART OR ASSEMBLY:
REVEAL MOUNT SECTIONS
2X WOOD FRAMING

NO.	DATE	REVISIONS	BY

DATE: 6/21/16
SCALE: N.T.S.
DWG. BY: JK
CHK. BY: LFS
DRAWING NO.: TX-4617
SHEET 5 OF 9

© 2016 R.W. BUILDING CONSULTANTS INC.

R:\Clients\Kane PERMANENT\B - Texas Dept of Ins\GS - Van Guard II Aluminum Hurricane Barrier, Outswing, Single, Impact Resistant (SUB ID 6397)\Drawings\TX-4617.dwg, 5.1

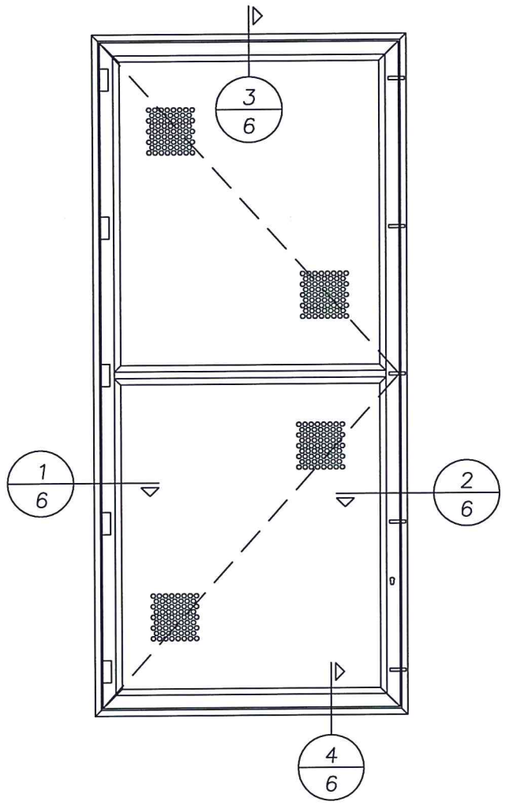

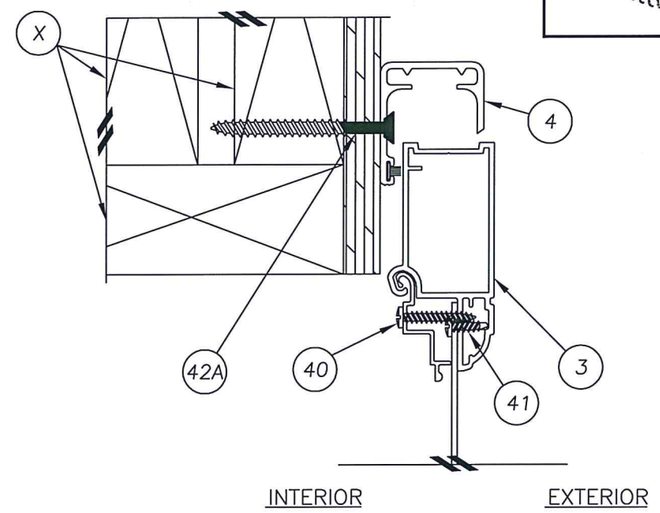

3/6 SURFACE MOUNT – HEAD

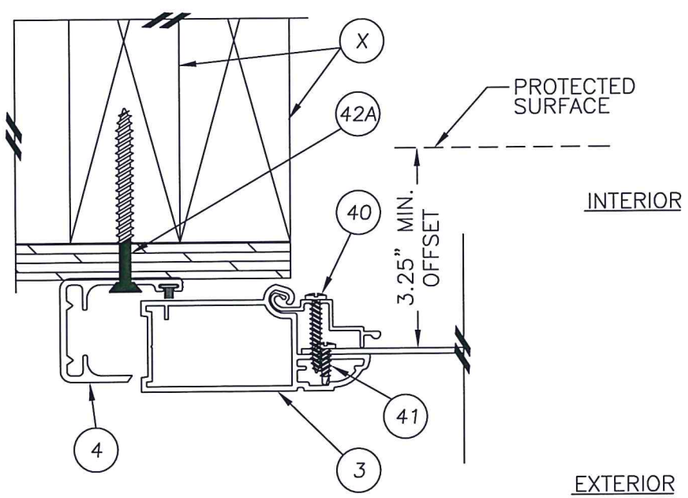

1/6 SURFACE MOUNT – HINGE JAMB
HINGE REMOVED FOR CLARITY

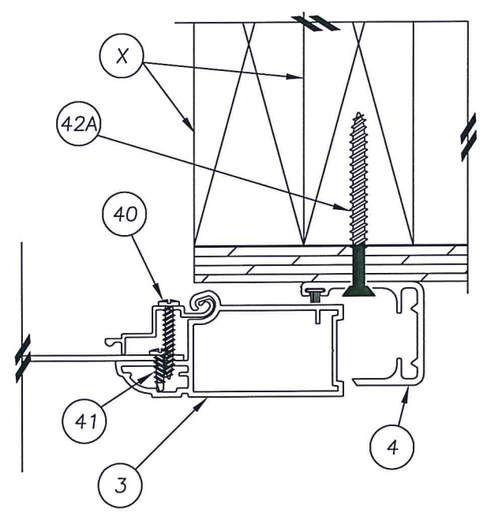

2/6 SURFACE MOUNT – STRIKE JAMB
LOCK REMOVED FOR CLARITY

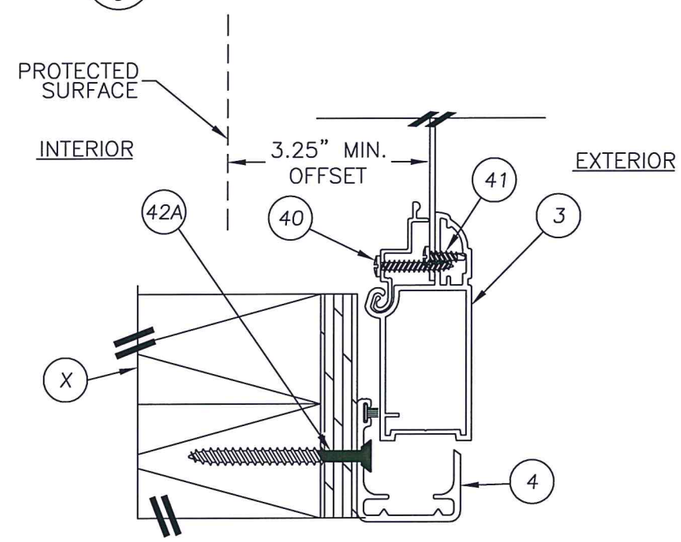

4/6 SURFACE MOUNT – BASE

STATE OF TEXAS
LYNDON F. SCHMIDT
104123
LICENSED
PROFESSIONAL ENGINEER

Documents Prepared By: Lyndon F. Schmidt, P.E.
TEXAS P.E. #104123

RW BUILDING CONSULTANTS, INC.
P.O. Box 230 Valrico FL. 33595
Phone No.: 813.659.9197

TEXAS BOARD OF PROFESSIONAL ENGINEERS
CERTIFICATE OF REGISTRATION # F-11852

PRODUCT: KANE SCREENS VAN GUARD II ALUMINUM HURRICANE BARRIER

PART OR ASSEMBLY: SURFACE MOUNT SECTIONS 2X WOOD FRAMING

NO.	DATE	BY

REVISIONS

DATE: 6/21/16
SCALE: N.T.S.
DWG. BY: JK
CHK. BY: LFS
DRAWING NO.: TX-4617
SHEET 6 OF 9

© 2016 R.W. BUILDING CONSULTANTS INC.

R:\Clients\Kane PERMANENT\B - Texas Dept of Ins\GS - Van Guard II Aluminum Hurricane Barrier, Outswing, Single, Impact Resistant (SUB ID 6397)\Drawings\TX-4617.dwg, 6.1

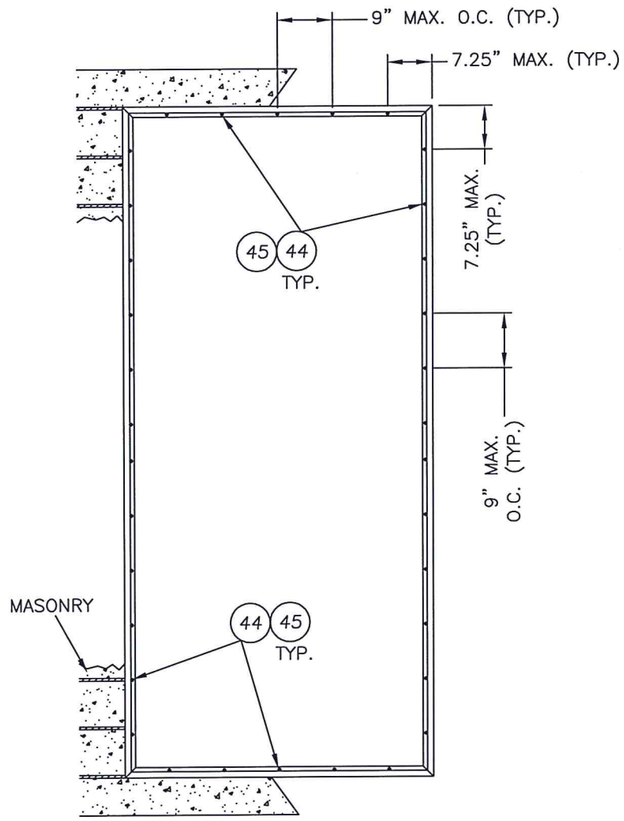

SURFACE MOUNT
SUB–FRAME ANCHORING

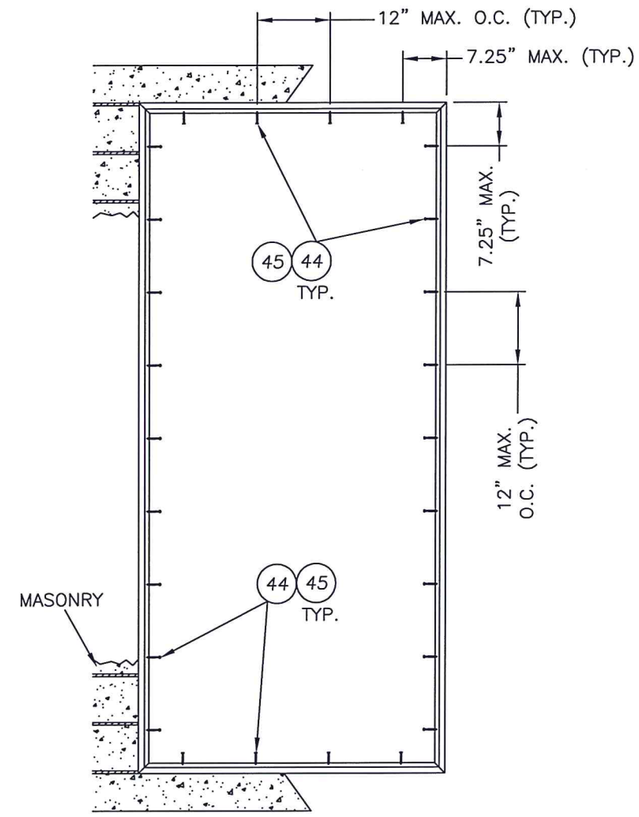

REVEAL MOUNT
SUB–FRAME ANCHORING

MASONRY ANCHORING

CONCRETE ANCHOR NOTES:

1. *Substitution of equal concrete anchors from a different supplier may have different edge distance and center distance requirements.*
2. *Concrete anchor locations at the corners may be adjusted to maintain the min. edge distance to mortar joints. Concrete anchor locations noted as "MAX. ON CENTER" must be adjusted to maintain the min. edge distance to mortar joints, additional concrete anchors may be required to ensure the "MAX. ON CENTER" dimension are not exceeded.*
3. *Concrete anchor table:*

ANCHOR TYPE	ANCHOR SIZE	MIN. EMBEDMENT	MIN. CLEARANCE TO MASONRY EDGE	MIN. CLEARANCE TO ADJACENT ANCHOR
ITW TAPCON®	1/4"	1-1/4"	2-1/2"	4"
ELCO ULTRACON®	1/4"	1-1/4"	2-1/2"	4"

STATE OF TEXAS
LYNDON F. SCHMIDT
104123
LICENSED
PROFESSIONAL ENGINEER

Documents Prepared By: Lyndon F. Schmidt, P.E.
TEXAS P.E. #104123

R.W. BUILDING CONSULTANTS, INC.
P.O. Box 230 Valrico FL. 33595
Phone No.: 813.659.9197

TEXAS BOARD OF PROFESSIONAL ENGINEERS
CERTIFICATE OF REGISTRATION # F–11852

PRODUCT:
KANE SCREENS
VAN GUARD II
ALUMINUM HURRICANE BARRIER

PART OR ASSEMBLY:
FRAME ANCHORING
MASONRY WALL

NO.	DATE	REVISIONS	BY

DATE: 6/21/16
SCALE: N.T.S.
DWG. BY: JK
CHK. BY: LFS
DRAWING NO.: TX–4617
SHEET 7 OF 9

© 2016 R.W. BUILDING CONSULTANTS INC.

R:\Clients\Kane PERMANENT\B - Texas Dept of Ins\GS - Van Guard II Aluminum Hurricane Barrier, Outswing, Single, Impact Resistant (SUB ID 6387)\Drawings\TX-4617.dwg, 7.1

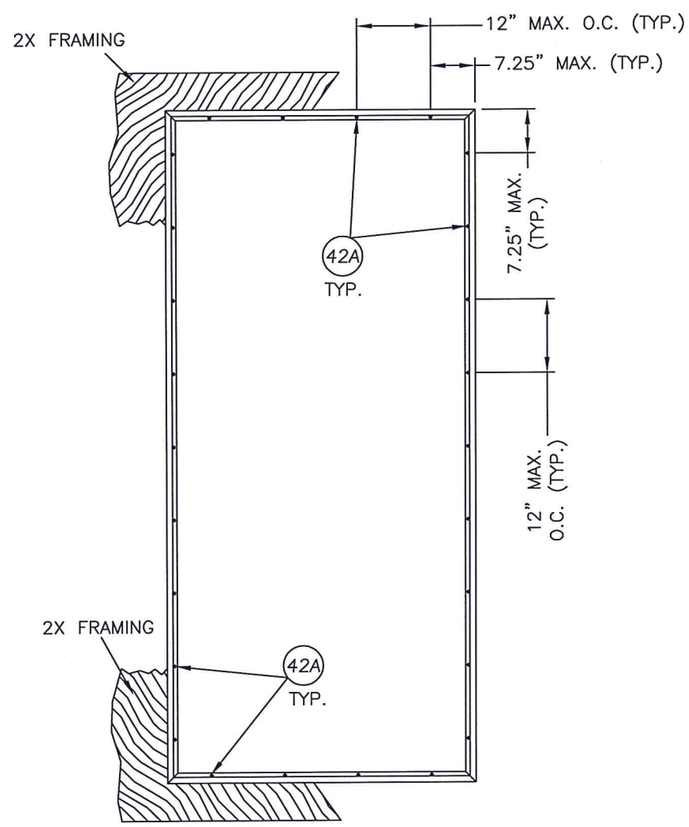

SURFACE MOUNT
SUB–FRAME ANCHORING

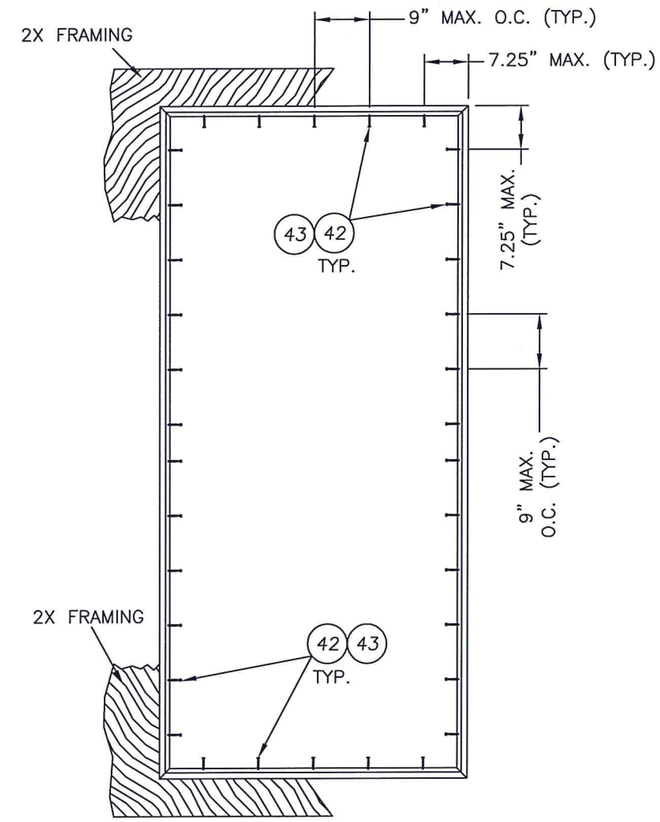

REVEAL MOUNT
SUB–FRAME ANCHORING

2X WOOD FRAME ANCHORING

STATE OF TEXAS
LYNDON F. SCHMIDT
104123
LICENSED
PROFESSIONAL ENGINEER

Documents Prepared By: Lyndon F. Schmidt, P.E.
TEXAS P.E. #104123

RW BUILDING CONSULTANTS, INC.
P.O. Box 230 Valrico FL. 33595
Phone No.: 813.659.9197

TEXAS BOARD OF PROFESSIONAL ENGINEERS
CERTIFICATE OF REGISTRATION # F–11852

PRODUCT: KANE SCREENS VAN GUARD II ALUMINUM HURRICANE BARRIER

PART OR ASSEMBLY: FRAME ANCHORING 2X WOOD FRAMING

NO.	DATE	REVISIONS	BY

DATE: 6/21/16
SCALE: N.T.S.
DWG. BY: JK
CHK. BY: LFS
DRAWING NO.: TX–4617
SHEET 8 OF 9

© 2016 R.W. BUILDING CONSULTANTS INC.

R:\Clients\Kane PERMANENT\B - Texas Dept of Ins\GS - Van Guard II Aluminum Hurricane Barrier, Outswing, Single, Impact Resistant (SUB ID 6207)\Drawings\TX-4617.dwg, 9.1

BILL OF MATERIALS (ANCHOR)		
ITEM	DESCRIPTION	MATERIAL
S1	SCREEN DETAIL (GALVANNEALED STEEL)	STEEL
X	2X FRAMING (SG >= 0.42)	WOOD
Y	HOLLOW BLOCK CMU (ASTM C90)	CONCRETE
Z	CONCRETE MASONRY (3000 PSI MIN. – ACI 301)	CONCRETE
A	1/4" MAX. SHIM	WOOD
B	MAIN FRAME CORNER ANGLE WRAP	STEEL
3	MAIN FRAME 6063–T6	ALUMINUM
4	SUB FRAME 6063–T6	ALUMINUM
5	HORIZONTAL BRACE 6063–T6	ALUMINUM
6	MAINFRAME COVER 6063–T6	ALUMINUM
7	MAIN FRAME CORNER KEY 6063–T6	ALUMINUM
8	MAIN FRAME SECONDARY CORNER KEY 6063–T6	ALUMINUM
9	HORIZONTAL BRACE CORNER KEY 6063–T6	ALUMINUM
30	LOCK ASSEMBLY (KANE 107 BITT KEY LOCK w/ 1/2" DIA. BOLT)	STEEL
31	HINGE ASSEMBLY (TYPE 304 STAINLESS STEEL)	ST. STEEL
32	BOLT STRIKE PLATE (16 GA. STEEL)	STEEL
40	#8 X 1" SQ DRIVE PAN HEAD SMS	ST. STEEL
41	#8 X 1/2" SQ DRIVE PH TEK SCREW	ST. STEEL
42	#12 X 2" PFH WOOD SCREW (1–1/2" MIN. EMBEDMENT)	STEEL
42A	#12 X 2–1/2" PFH WOOD SCREW (1–3/4" MIN. EMBEDMENT)	STEEL
43	#12 X 2" PAN HEAD SMS (1–1/2" MIN. EMBEDMENT)	STEEL
44	1/4" X 1–3/4" HWH ELCO OR ITW CONCRETE SCREW	STEEL
45	1/4" X 1–3/4" PFH ELCO OR ITW CONCRETE SCREW	STEEL
47	#14 X 2–1/2" PFH WOOD SCREW (1–5/8" MIN. EMBEDMENT)	STEEL
48	#10–24 X 3/8" HWH–SLOTTED MS	ST. STEEL
49	#10–24 X 7/8" PPH MS	STEEL
50	#12–24 X 1–3/8" #3 SQ DRIVE (#4 DRILL PT.)	STEEL
51	#10–24 X 3/8" SQ DRIVE PH THREAD CUTTING SCREW	ST. STEEL
52	#10–24 X 1/4" PPH MS	ST. STEEL
53	STRIKE PLATE (13 GA. STEEL)	STEEL

1. WOOD SCREW INSTALLATION NOTES:
   Maintain a minimum 3/4" edge distance, 1" end distance, & 1" o.c. spacing of wood screws to prevent the splitting of wood.

LOCK RELEASE OPTIONS

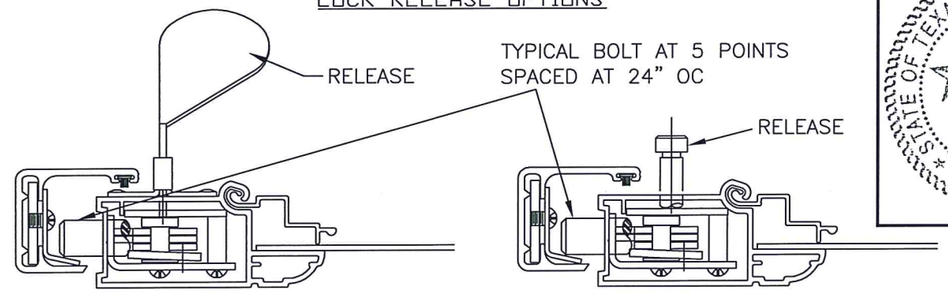

PUSH QUICK RELEASE

LIFT QUICK RELEASE

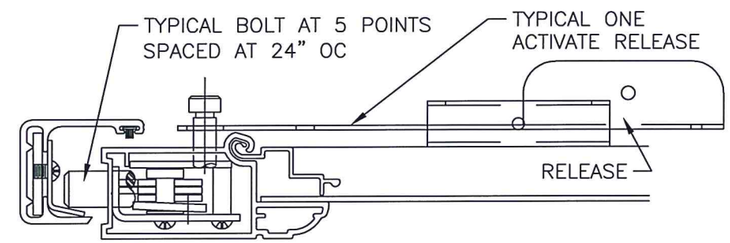

DOWN QUICK RELEASE

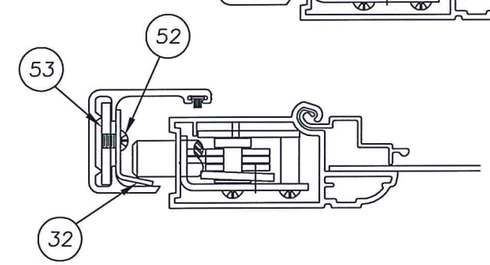

BOLT STRIKE ASSEMBLY DETAILS

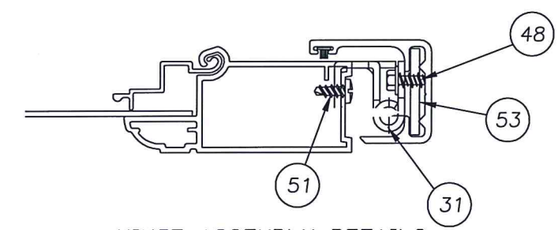

HINGE ASSEMBLY DETAILS

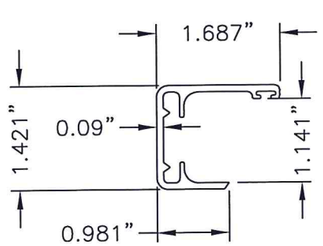

4 SUB FRAME

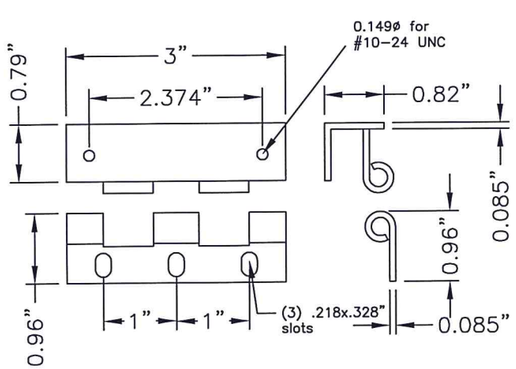

31 TYPICAL HINGE

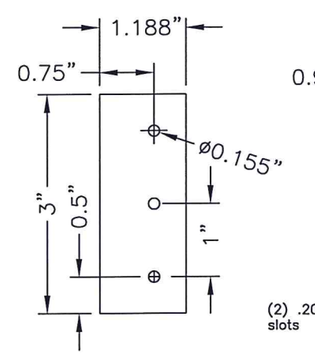

53 STRIKE PLATE

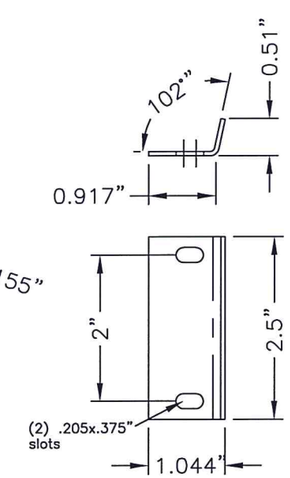

32 BOLT STRIKE

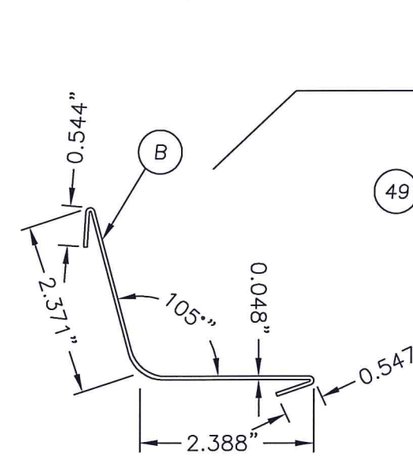

B MAIN FRAME CORNER SIDE VIEW

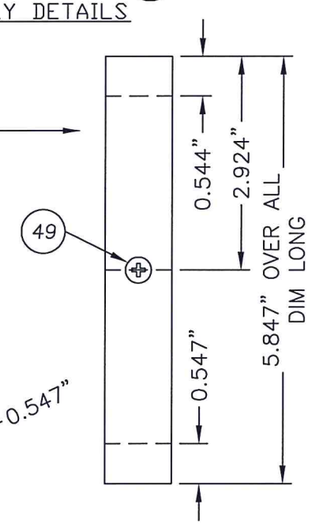

B MAIN FRAME CORNER ANGLE WRAP

Documents Prepared By: Lyndon F. Schmidt, P.E. TEXAS P.E. #104123
RW BUILDING CONSULTANTS, INC.
P.O. Box 230 Valrico FL. 33595
Phone No.: 813.659.9197
TEXAS BOARD OF PROFESSIONAL ENGINEERS CERTIFICATE OF REGISTRATION # F-11852

STATE OF TEXAS — LYNDON F. SCHMIDT — 104123 — LICENSED PROFESSIONAL ENGINEER

2-15-17

PRODUCT: KANE SCREENS VAN GUARD II ALUMINUM HURRICANE BARRIER

PART OR ASSEMBLY: BILL OF MATERIALS, COMPONENTS & LOCK RELEASE OPTIONS

NO.	DATE	BY	REVISIONS

DATE: 6/21/16
SCALE: N.T.S.
DWG. BY: JK
CHK. BY: LFS
DRAWING NO.: TX–4617
SHEET 9 OF 9

© 2016 R.W. BUILDING CONSULTANTS INC.

R:\Clients\Kane PERMANENT\B - Texas Dept of Ins\GS - Van Guard II Aluminum Hurricane Barrier, Outswing, Single, Impact Resistant (SUB ID 6397)\Drawings\TX 4617.dwg, 9.1