GENERAL NOTES:

1. 58mm ER & NER SLAT BERTHA IMPACT PROTECTIVE ROLLING SYSTEM SHOWN ON THIS PRODUCT EVALUATION DOCUMENT (P.E.D.) HAS BEEN VERIFIED FOR COMPLIANCE IN ACCORDANCE WITH THE 2006 EDITIONS OF THE INTERNATIONAL BUILDING CODE, (I.B.C.) AND INTERNATIONAL RESIDENTIAL CODE, (I.R.C.) WITH THE 2006 TEXAS REVISIONS, EFFECTIVE JANUARY 1, 2008.

   THIS PRODUCT'S SHALL BE INSTALLED AT SEAWARD AND INLAND AREAS, AS DEFINED BY THE TEXAS DEPARTMENT OF INSURANCE. DESIGN WIND LOADS SHALL BE DETERMINED AS PER SECTION 1609 OF THE OF THE INTERNATIONAL BUILDING CODE, FOR A BASIC WIND SPEED AS REQUIRED BY THE JURISDICTION WHERE SHUTTER WILL BE INSTALLED, AND FOR A DIRECTIONALITY FACTOR Kd=0.85, IN ACCORDANCE W/ ASCE 7-05 STANDARD IN ORDER TO VERIFY THAT COMPONENTS AND ANCHORS ON THIS P.E.D. AS TESTED WERE NOT OVER STRESSED, A 33% INCREASE IN ALLOWABLE STRESS FOR WIND LOADS WAS NOT USED IN THEIR ANALYSIS. FASTENERS SPACING TO WOOD HAS BEEN DETERMINED IN ACCORDANCE WITH N.D.S. 2005.

   IN ORDER TO VERIFY THAT COMPONENTS AND ANCHORS ON THIS P.E.D. AS TESTED, WERE NOT OVER STRESSED, A 33% INCREASE IN ALLOWABLE STRESS FOR WIND LOADS WAS NOT USED IN THEIR ANALYSIS. FASTENERS SPACING TO WOOD HAS BEEN DETERMINED IN ACCORDANCE WITH N.D.S. 2005.

   58mm ER & NER SLAT BERTHA IMPACT PROTECTIVE ROLLING SYSTEM'S ADEQUACY FOR IMPACT AND FATIGUE RESITANCE HAS BEEN VERIFIED IN ACCORDANCE WITH SECTION **1626** OF THE ABOVE MENTIONED CODE AS PER:

   - FENESTRATION TESTING LAB REPORTS #2760, #4596, #4644 & #4760
   - AMERICAN TESTING LAB OF SOUTH FLORIDA REPORTS #0404.01-08, #0803.02-12, #0803.03-12, #0803.01-12, #0803.04-12

2. ALL ALUMINUM EXTRUSIONS SHALL BE ALUMINUM ASSOCIATION 6063-T6 ALLOY & TEMPER (UNLESS OTHERWISE NOTED).

3. ALL SCREWS & BOLTS (EXCEPT COMPONENTS (B) & (B1)) INSTALLED AT SEAWARD AREAS TO BE STAINLESS STEEL 304 OR 316 AISI SERIES AND MEET ASTM A167, OR HOT DIPPED GALVANIZED (AFTER FABRICATION) CARBON STEEL AS PER ASTM A123 OR ASTM A153, OR HOT DIPPED GALVANIZED OR GALVANNEALED (PRIOR TO FABRICATION) AND MEET ASTM A653 WITH 50 KSI YIELD STRENGTH AND 90 KSI TENSILE STRENGTH, PER 2006 TEXAS REVISIONS TO THE 2006 I.B.C. AND THE 2006 I.R.C TEK SCREWS SHALL BE AS MANUFACTURED BY ITW BUILDEX. ALL SCREWS SHALL BE HEX HD HWH.

4. ALL SCREWS & BOLTS (EXCEPT COMPONENTS (B) & (B1)) INSTALLED AT INLAND I AREAS TO BE STAINLESS STEEL 304 OR 316 AISI SERIES AND MEET ASTM A167, OR HOT DIPPED GALVANIZED (AFTER FABRICATION) CARBON STEEL AS PER ASTM A123 OR ASTM A153, OR HOT DIPPED GALVANIZED OR GALVANNEALED (PRIOR TO FABRICATION) AND MEET ASTM A653; HOT DIP GALVANIZED OR ELECTRO GALVANIZED PER ASTM A641, MECHANICALLY DEPOSITED ZINC COATINGS PER ASTM B695 OR ELECTRO DEPOSITED ZINC COATINGS PER ASTM B633, PER THE 2006 TEXAS REVISIONS TO THE 2006 I.B.C. AND TO THE 2006 I.R.C.

5. ANCHORS TO WALL FOR (E) (F) & (G) SIDE RAILS SHALL BE AS FOLLOWS; SEE NOTE 9 FOR SUBSTRATE LIMITATIONS BASED ON PRODUCT SYSTEM.

END RETENTION SYSTEM

SUBSTRATES											
POURED CONCRETE						GROUTED CONCRETE BLOCK (ASTM C-90)				WOOD (G=0.55)	
ANCHOR TYPE & MANUFACTURER						ANCHOR TYPE & MANUFACTURER				ANCHOR TYPE & MANUFACTURER	
3/8" ø WEDGE BOLT/ POWER FASTENERS, INC.			5/16" ø ULTRACON/ ELCO CONST. PRODUCTS			3/8"ø KWIK HUS BOLT/ HILTI, INC.		5/16" ø ULTRACON/ ELCO CONST. PRODUCTS		5/16" ø ULTRACON/ ELCO CONST. PRODUCTS	
MIN. E.D.	MIN. EMBED.	MIN. f'c	MIN. E.D.	MIN. EMBED.	MIN. f'c	MIN. E.D.	MIN. EMBED.	MIN. E.D.	MIN. EMBED.	MIN. E.D.	MIN. EMBED.
4 1/2"	3 1/2"	3 ksi	3 1/8"	2"	3.5 ksi	4"	3 1/4"	2 1/2"	2 1/4"	3 1/8"	2"

NON END RETENTION SYSTEM

SUBSTRATES													
POURED CONCRETE						GROUTED CONCRETE BLOCK (ASTM C-90)				WOOD (G=0.55)			
ANCHOR TYPE & MANUFACTURER						ANCHOR TYPE & MANUFACTURER				ANCHOR TYPE & MANUFACTURER			
1/4"ø MAXI-SET TAPCONS/ITW/BUILDEX			1/4" ø ULTRACON/ ELCO CONST. PRODUCTS			1/4"ø MAXI-SET TAPCONS/ITW/BUILDEX		1/4" ø ULTRACON/ ELCO CONST. PRODUCTS		1/4"ø MAXI-SET TAPCONS/ITW/BUILDEX		1/4" ø ULTRACON/ ELCO CONST. PRODUCTS	
MIN. E.D.	MIN. EMBED.	MIN. f'c	MIN. E.D.	MIN. EMBED.	MIN. f'c	MIN. E.D.	MIN. EMBED.	MIN. E.D.	MIN. EMBED.	MIN. E.D.	MIN. EMBED.	MIN. E.D.	MIN. EMBED.
2 1/2"	2 1/4"	3.19 ksi	2 1/2"	2 1/4"	2.73 ksi	2 1/2"	2 1/4"	2 1/2"	2 1/4"	1"	2 1/4"	1"	2 1/4"

NOTES: FOR END RETENTION AND NON END RETENTION SYSTEMS

(1) NO EMBEDMENT INTO FINISH MATERIAL SHALL BE CONSIDERED AS PART OF THE REQUIRED EMBEDMENT.
(2) EDGE DISTANCE IS BEYOND ANY FINISH MATERIAL.
(3) ANCHORS SHALL BE INSTALLED FOLOWING ALL OF THE RECOMENDATIONS AND SPECIFICATIONS OF THE ANCHOR'S MANUFACTURER.

6. ANCHORS REQUIRED FOR STORM BARS CONNECTIONS SHALL BE AS INDICATED ON SHEETS 19 THRU 22.

7. ANCHORS REQUIRED FOR MULLION CONNECTIONS AND HEADERS SHALL BE AS SPECIFIED ON APPLICABLE SECTIONS SHOWN ON SHEETS 7 THRU 10 AND 23 RESPECTIVELY.

   -KWIK BOLT TZ EXPANSION ANCHOR MANUFACTURED BY HILTI, INC.
   -KWIK HUS-H SCREW ANCHOR MANUFACTURED BY HILTI, INC.
   -WEDGE-BOLT ANCHOR MANUFACTURED BY POWER FASTENERS, INC.

   MINIMUM EDGE DISTANCE AND SPACING FOR ABOVE MENTIONED ANCHORS SHALL BE AS INDICATED BELOW OR AT ABOVE MENTIONED SHEETS. EDGE DISTANCE AND EMBEDMENTS ARE BEYOND ANY FINISH MATERIAL.

ANCHOR	SPACING @ 100%	EDGE DISTANCE @ 100%	EMBEDMENT @ 100%	
			CONCRETE	CONCRETE BLOCK
3/4"ø KWIK BOLT TZ	27"	9"	4 3/4" (3000 psi)	NOT ALLOWED
1/2"ø KWIK BOLT TZ	22 1/2"	7 1/2"	3 1/4" (3000 psi)	NOT ALLOWED
3/8"ø KWIK BOLT TZ	6"	4 3/8"	2" (3000 psi)	NOT ALLOWED
3/8"ø KWIK HUS-H SCREW	4"	5"	2" (3000 psi)	NOT ALLOWED
3/8"ø WEDGE-BOLT	4 1/2"	4 1/2"	2 1/2" (3000 psi)	NOT ALLOWED
1/2"ø KWIK HUS-H SCREW OR WEDGE BOLT	6"	6"	3" (3000 psi)	NOT ALLOWED
5/8"ø KWIK HUS-H SCREW	7 1/2"	7 1/2"	2 1/2" (3000 psi)	NOT ALLOWED

8. THE INSTALLATION CONTRACTOR IS TO SEAL/CAULK ALL PRODUCT COMPONENT EDGES WHICH REMAIN IN CONTINUOUS CONTACT WITH THE BUILDING TO PREVENT WIND/RAIN INTRUSION. CAULK AND SEAL PRODUCT TRACKS ALL AROUND FULL LENGTH.

9. IT SHALL BE THE RESPONSIBILITY OF THE CONTRACTOR TO VERIFY THE SOUNDNESS OF THE STRUCTURE WHERE PRODUCT IS TO BE ATTACHED TO INSURE PROPER ANCHORAGE. THIS PRODUCT SHALL ONLY BE ATTACHED TO CONCRETE, GROUT FILLED CELL CONCRETE BLOCK OR WOOD FRAME BUILDINGS. SEE SHEETS 5 THRU 10 & 18 THRU 23 FOR LIMITATIONS FOR SUBSTRATE INSTALLATIONS.

10. PRODUCTS INSTALLATION SHALL COMPLY WITH SPECS INDICATED IN THIS DRAWING PLUS ANY BUILDING AND ZONING REGULATIONS PROVIDED BY THE JURISDICTION WHERE PERMIT IS APPLIED TO.

11. PRODUCT MECHANISM NOT PART OF THIS APPROVAL.

12. (a) THIS P.E.D. PREPARED BY THIS ENGINEER IS GENERIC AND DOES NOT PROVIDE INFORMATION FOR A SITE SPECIFIC PROJECT; i.e. WHERE THE SITE CONDITIONS DEVIATE FROM THE P.E.D.

    (b) CONTRACTOR TO BE RESPONSIBLE FOR THE SELECTION, PURCHASE AND INSTALLATION INCLUDING LIFE SAFETY OF THIS PRODUCT, BASED ON THIS P.E.D. PROVIDED HE/SHE DOES NOT DEVIATE FROM THE CONDITIONS DETAILED ON THIS DOCUMENT. CONSTRUCTION SAFETY AT SITE IS THE CONTRACTOR'S RESPONSIBILITY.

    (c) THIS P.E.D. WILL BE CONSIDERED INVALID IF ALTERED BY ANY MEANS.

    (d) SITE SPECIFIC PROJECTS SHALL BE PREPARED BY A PROFESSIONAL REGISTERED ENGINEER OR ARCHITECT WHICH WILL BECOME THE ENGINEER OF RECORD (E.O.R.) FOR THE PROJECT AND WHO WILL BE RESPONSIBLE FOR THE PROPER USE OF THE P.E.D. ENGINEER OF RECORD, ACTING AS A DELEGATED ENGINEER TO THE P.E.D. ENGINEER, SHALL SUBMIT TO THIS LATTER THE SITE SPECIFIC DRAWINGS FOR REVIEW.

    (e) ORIGINAL P.E.D. SHALL BEAR THE DATE AND ORIGINAL SEAL AND SIGNATURE OF THE PROFESSIONAL ENGINEER OF RECORD THAT PREPARED IT.

13. PRODUCT MANUFACTURE'S LABEL SHALL BE LOCATED ON A READILY VISIBLE LOCATION AT PRODUCT IN ACCORDANCE WITH TEXAS DEPARTMENT OF INSURANCE REQUIREMENTS. ONE LABEL SHALL BE PLACED FOR EVERY OPENING.

THIS DRAWING SHALL ONLY BE USED TO OBTAIN PERMITS UNDER THE TEXAS DEPARTMENT OF INSURANCE JURISDICTION

TEXAS DEPARTMENT OF INSURANCE - 2006

7/22/15

P.E. SEAL/SIGNATURE/DATE

WALTER A. TILLIT Jr. P.E.
PROFESSIONAL ENGINEER

6355 N.W. 36th. St., Ste. 305
VIRGINIA GARDENS, Fl. 33166
Phone : (305) 871-1530 , Fax : (305) 871-1531

TEXAS LIC. # 90691
FIRM REGISTRATION # F-13790

58mm ER & NER SLAT BERTHA IMPACT PROTECTIVE ROLLING SYSTEM

AMERICAN SHUTTER SYSTEMS ASSOC., INC.
4268 WESTROADS DRIVE
WEST PALM BEACH, FL. 33407
PHONE: (877)999-2772 FAX: (561)209-8380

REV. No	DESCRIPTION	DATE	REV. No	DESCRIPTION	DATE
1	-	-	3	-	
2	-	-	4	-	

DRAWN BY: F.R.L.
07/15/15 DATE
15-248 DRAWING No
SHEET 1 OF 27

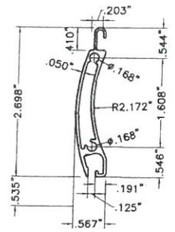

(A) SLAT
58mm EXTRUDED ALUMINUM SOLID SLAT
6063–T6 ALUMINUM ALLOY
Fy = 28.5 ksi (AVE.)
Ftu = 30.8 ksi (AVE.)

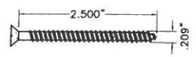

(B) END RETENTION SCREW
#10–12 x 2 1/2" AISI 1022 CARBON STEEL S.M.S. W/ DACROSHIELD COATING
Ftu = 200 ksi

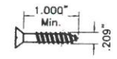

(B1) NON–RETENTION SCREW
#10 x 1" Min. 318 F.H. S.S. S.M.S. W/ DACROSHIELD COATING
Ftu = 200 ksi

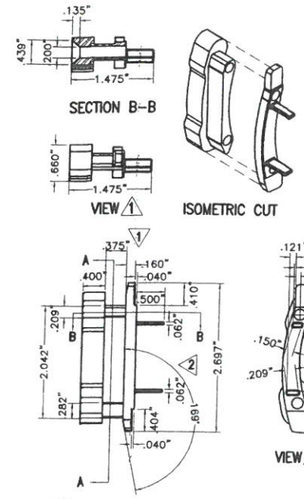

(C) SLAT LOCK GUIDE @ EVERY OTHER SLAT
FOR END RETENTION SYSTEM
CELCON ACETAL COPOLYMER

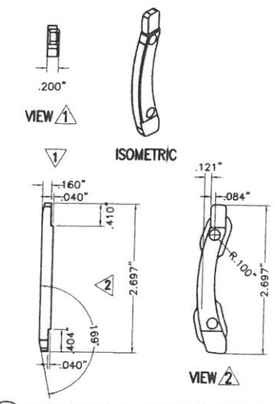

(C1) SLAT LOCK @ EVERY OTHER SLAT
FOR NON END RETENTION SYSTEM
CELCON ACETAL COPOLYMER

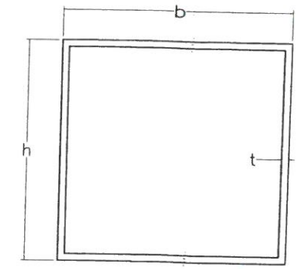

(D) BUILD–OUT MOUNTED TUBE
FOR END RETENTION & NON END RETENTION SYSTEMS
6063–T6 ALUMINUM ALLOY

B.O TUBE	b	h	t
D1	4"	2"	0.25"
D2	4"	3"	0.125"
D3	4"	4"	0.125"

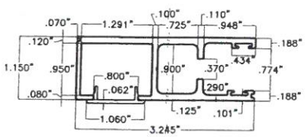

(E) SIDE RAIL
FOR END RETENTION SYSTEM
EXTRUDED ALUMINUM TRACK FOR SLAT
(6063–T6 ALUMINUM ALLOY)

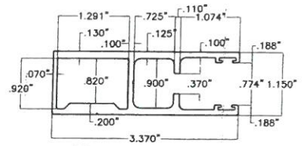

(F) SIDE RAIL
FOR END RETENTION SYSTEM
EXTRUDED ALUMINUM TRACK FOR SLAT
(6063–T6 ALUMINUM ALLOY)

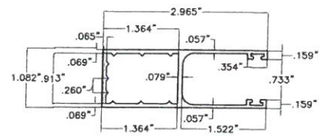

(G) SIDE RAIL
FOR NON END RETENTION SYSTEM
EXTRUDED ALUMINUM TRACK FOR SLAT
6063–T6 ALUMINUM ALLOY

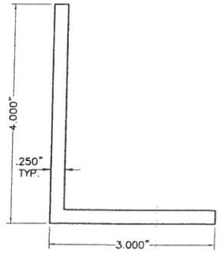

(H) 4"x3"x1/4" ANGLE
FOR END RETENTION SYSTEM
6063–T6 ALUMINUM ALLOY

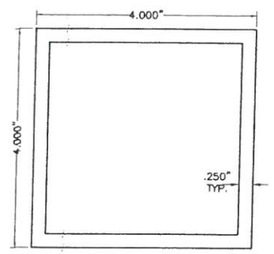

(I) INSIDE MOUNT TUBE
FOR END RETENTION SYSTEM
6063–T6 ALUMINUM ALLOY

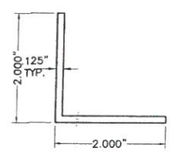

(J) 2"x2"x1/8" ANGLE
FOR END RETENTION & NON END RETENTION SYSTEMS
6063–T6 ALUMINUM ALLOY

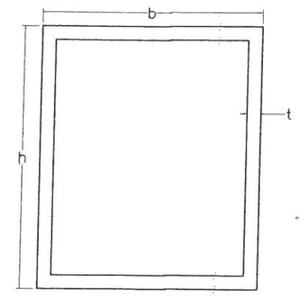

MULLIONS
FOR END RETENTION & NON END RETENTION SYSTEMS
6063–T6 ALUMINUM ALLOY

MULLIONS	b	h	t
K NER	3"	4"	0.125"
L NER	4"	4"	0.25"
M NER ER	4"	6"	0.25"
N ER	4"	8"	0.25"

ER: END RETENTION SYSTEM
NER: NON END RETENTION SYSTEM

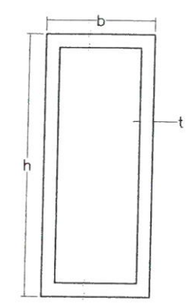

STORM BARS
FOR NON END RETENTION SYSTEM
6063–T6 ALUMINUM ALLOY

STORMBARS	b	h	t
O	2"	2"	0.25"
P	2"	3"	0.125"
Q	2"	4"	0.125"
R	2"	4"	0.25"

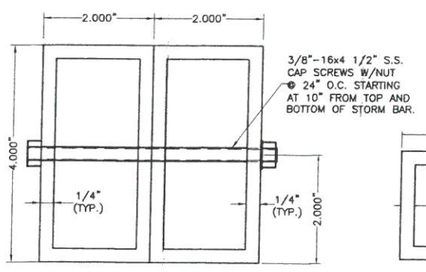

(2R) TYPE 5 STORM BAR
FOR NON END RETENTION SYSTEM
4" HEAVY EXTRUDED STORM BAR
6063–T6 ALUMINUM ALLOY

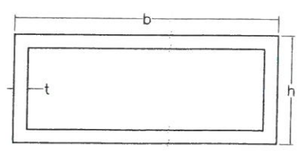

HEADERS
FOR NON END RETENTION SYSTEM
6063–T6 ALUMINUM ALLOY

HEADERS	b	h	t
S	3"	2"	0.125"
T	4"	2"	0.125"
U	4"	2"	0.25"
V	6"	2"	0.125"

COMPONENTS

SCALE: 3/8" = 1"

TEXAS DEPARTMENT OF INSURANCE – 2006

7/22/15
P.E. SEAL/SIGNATURE/DATE

WALTER A. TILLIT Jr. P.E.
PROFESSIONAL ENGINEER
6355 N.W. 36th. St., Ste. 305
VIRGINIA GARDENS, Fl. 33166
Phone : (305) 871–1530 , Fax : (305) 871–1531
TEXAS LIC. # 90691
FIRM REGISTRATION # F–13790

58mm ER & NER SLAT BERTHA IMPACT PROTECTIVE ROLLING SYSTEM

AMERICAN SHUTTER SYSTEMS ASSOC., INC.
4268 WESTROADS DRIVE
WEST PALM BEACH, FL. 33407
PHONE: (877)999–2772 FAX: (561)209–8380

REV. No	DESCRIPTION	DATE	REV. No	DESCRIPTION	DATE
1	–	–	3	–	
2	–	–	4	–	

DRAWN BY: F.R.L.
07/15/15 DATE
15–248 DRAWING No
SHEET 2 OF 27

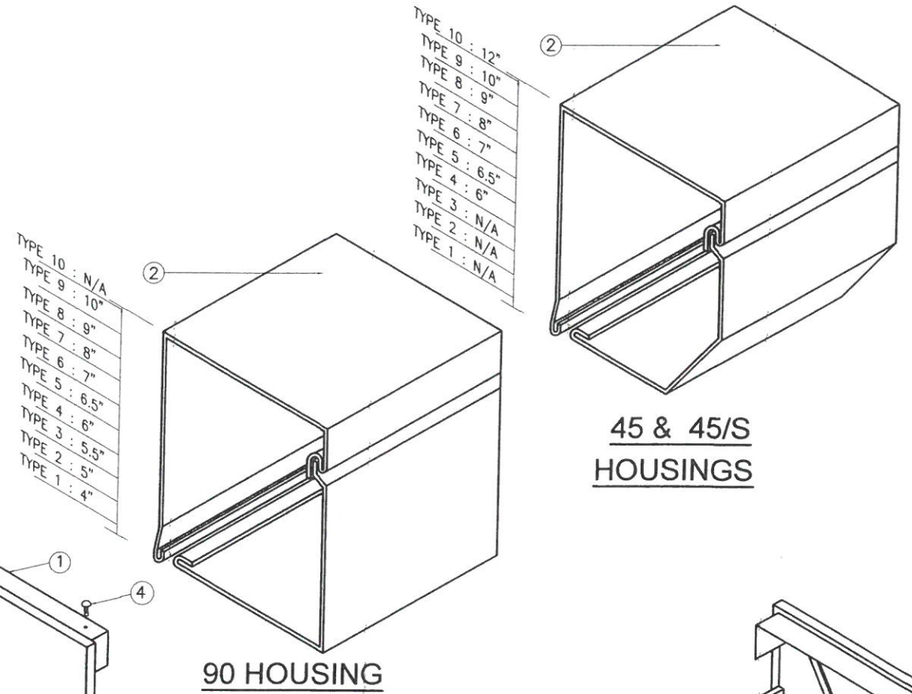

45 & 45/S HOUSINGS

90 HOUSING

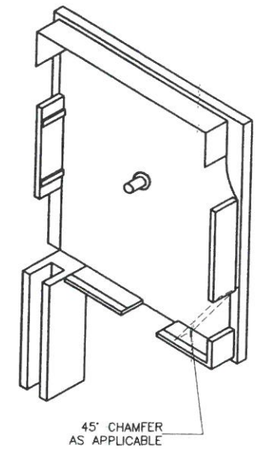

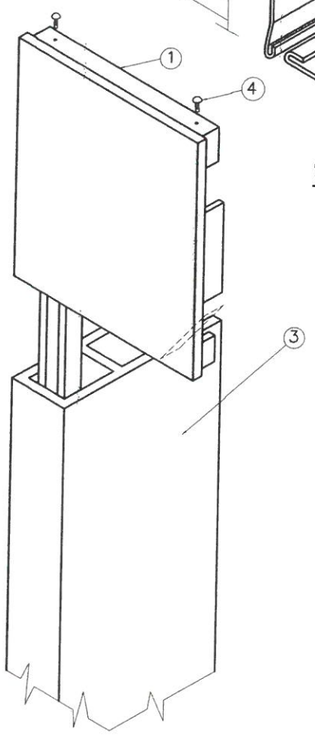

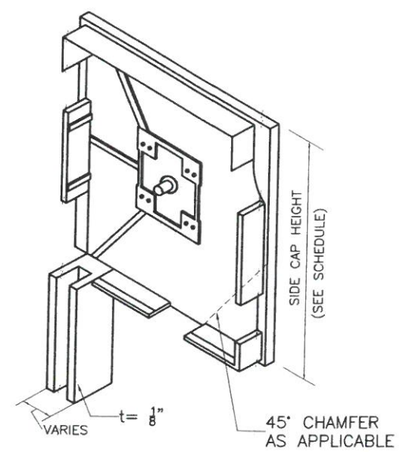

1 END CAPS:

STRUCTURAL COMPONENTS FOR OPERATING SYSTEM

1 – SIDE/END CAP (CAST ALUMINUM) *
2 – HOUSING, 0.040" THICK SHEET METAL (3105–H14 OR STRONGER)
3 – SIDE RAIL

FASTENERS

4 – 3/16" ALUMINUM POP RIVETS(6 REQ'D EA. SIDE CAP) : 2 @ TOP, 2 @ REAR, 2@ BOTTOM

* SHALL BE CAPABLE TO SUSTAIN SLAT'S WEIGHT AND ASSURE LIFTING MECHANISM (SEE NOTES 11/1 & 12(b)/1)

TEXAS DEPARTMENT OF INSURANCE – 2006

BOX STRUCTURAL COMPONENTS AND ASSEMBLY DETAIL

(SEE NOTE 11 & 12(b) ON SHEET 1)

7/22/15

P.E. SEAL/SIGNATURE/DATE

WALTER A. TILLIT Jr. P.E.
PROFESSIONAL ENGINEER

6355 N.W. 36th. St., Ste. 305
VIRGINIA GARDENS, Fl. 33166
Phone : (305) 871–1530 , Fax : (305) 871–1531

TEXAS LIC. # 90691
FIRM REGISTRATION # F–13790

58mm ER & NER SLAT BERTHA IMPACT PROTECTIVE ROLLING SYSTEM

AMERICAN SHUTTER SYSTEMS ASSOC., INC.
4268 WESTROADS DRIVE
WEST PALM BEACH, FL. 33407
PHONE: (877)999–2772 FAX: (561)209–8380

REV. No	DESCRIPTION	DATE	REV. No	DESCRIPTION	DATE
1	–	–	3	–	
2	–	–	4	–	

DRAWN BY: F.R.L.

07/15/15 DATE

15–248 DRAWING No

SHEET 3 OF 27

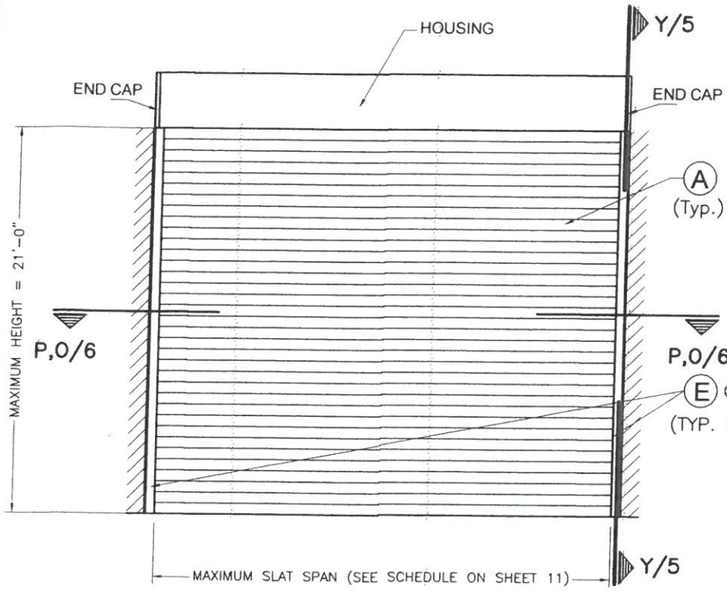

TYPICAL SINGLE UNIT ELEVATION W/O MULLIONS

NOTE: SEE SHEET 2 & 3 FOR COMPONENTS NOMENCLATURE.

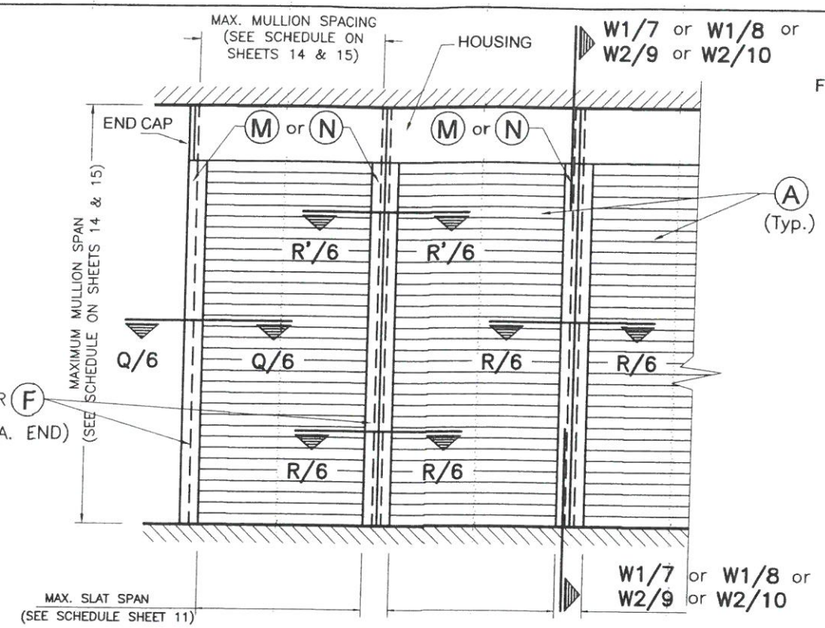

TYPICAL CONSECUTIVE SINGLE UNIT ELEVATION W/ MULLIONS

NOTE: SEE SHEET 2 & 3 FOR COMPONENTS NOMENCLATURE.

SLAT PERFORMANCE CHART IN WOOD

FOR A GIVEN MAXIMUM DESIGN PRESSURE RATING (p.s.f) AND PRODUCT MOUNT CONDITION FOR INSTALLATIONS W/O STORM BARS PER DETAIL 1 BELOW

5/16"Ø ULTRACON ANCHOR			
DESIGN LOAD (p.s.f.)	MAX. SLAT SPAN "LMAX." (ft)		REQUIRED MIN. SEPARATION TO GLASS MESURED TO BACK OF SLAT (in)
	WALL MOUNT	BUILD-OUT MOUNT W/ (D1)	
+45,-60	4'-0"	4'-0"	3 1/2"
+45,-60	6'-0"	6'-0"	5"
+45,-60	12'-0"	12'-0"	7 7/8"

NOTES:

1- WOOD FRAME WALL TO BE BUILT STRICTLY IN ACCORDANCE WITH SPECS GIVEN ON DETAIL AND PROVISIONS FROM CHAPTER 23 OF THE FLORIDA BUILDING CODE. MINIMUM LENGTH OF WALL AT EITHER SIDE OF OPENING SHALL BE 33".

2- VALID FOR SOUTHERN PINE #2 (G=0.55)

END RETENTION SYSTEM

Vx FORCES (Lb/FT) & Vy FORCES (Lb/FT) ACTING AT JAMBS FOR A DESIGN LOAD RANGE, SLAT SPAN RANGE FOR POURED CONCRETE OR GROUTED CONCRETE BLOCK WALL BUILDINGS *

(USE MAXIMUM VALUE BETWEEN POSITIVE AND NEGATIVE LOAD)

DESIGN LOAD RANGE (p.s.f.)	SLAT SPAN RANGE																	
	0'-4'		> 4'-5'		> 5'-6'		> 6'-7'		> 7'-9'		> 9'-12'		> 12'-16'		> 16'-20'		> 20'-23'	
	Vx	Vy	Vx	Vy	Vx	Vy	Vx	Vy	Vx	Vy	Vx	Vy	Vx	Vy	Vx	Vy	Vx	Vy
≤ 30.0	0	60	0	75	0	90	222	105	415	135	844	180	1348	240	2010	300	2183	342
>30-40	0	80	0	100	0	120	428	140	627	180	1144	240	1774	320	2515	400	2829	457
>40-60	0	120	0	150	150	180	496	210	1035	270	1722	300	2588	480	2964	533	2831	473
>60-80	0	160	0	200	398	240	788	280	1428	360	2278	480	2960	580	2976	547	–	–
>80-105	0	210	28	263	694	315	1141	368	1905	473	2083	499	2083	499	–	–	–	–
>105-120	0	240	58	300	867	360	1348	420	2184	540	2283	555	–	–	–	–	–	–
>120-140	0	280	98	350	1094	420	1619	490	2325	595	2325	595	–	–	–	–	–	–

*NOTE:
IT SHALL BE THE RESPONSIBILITY OF THE CONTRACTOR OR PERMIT HOLDER TO VERIFY THAT EXISTING STRUCTURE IS DESIGNED TO SUPPORT Vx AND Vy FORCES IN POUNDS PER UNIT FOOT OF PRODUCT HEIGHT AT BOTH JAMBS. SEE THIS SHEET FOR Vx & Vy VALUES.

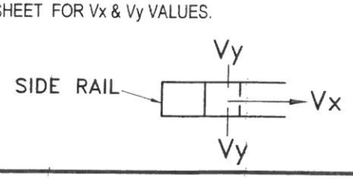

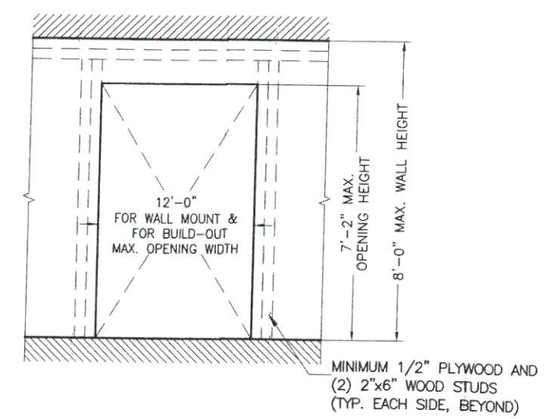

DETAIL 1 (ELEVATION)

INSTALLATION INTO WOOD FRAME STRUCTURES

TEXAS DEPARTMENT OF INSURANCE – 2006

7/22/15

P.E. SEAL/SIGNATURE/DATE

WALTER A. TILLIT Jr. P.E.
PROFESSIONAL ENGINEER

6355 N.W. 36th. St., Ste. 305
VIRGINIA GARDENS, Fl. 33166
Phone : (305) 871-1530 , Fax : (305) 871-1531

TEXAS LIC. # 90691
FIRM REGISTRATION # F-13790

58mm ER & NER SLAT BERTHA IMPACT PROTECTIVE ROLLING SYSTEM

AMERICAN SHUTTER SYSTEMS ASSOC., INC.
4268 WESTROADS DRIVE
WEST PALM BEACH, FL. 33407
PHONE: (877)999-2772 FAX: (561)209-8380

REV. No	DESCRIPTION	DATE	REV. No	DESCRIPTION	DATE
1	–	–	3	–	
2	–	–	4	–	

DRAWN BY: F.R.L.

07/15/15 DATE

15-248 DRAWING No

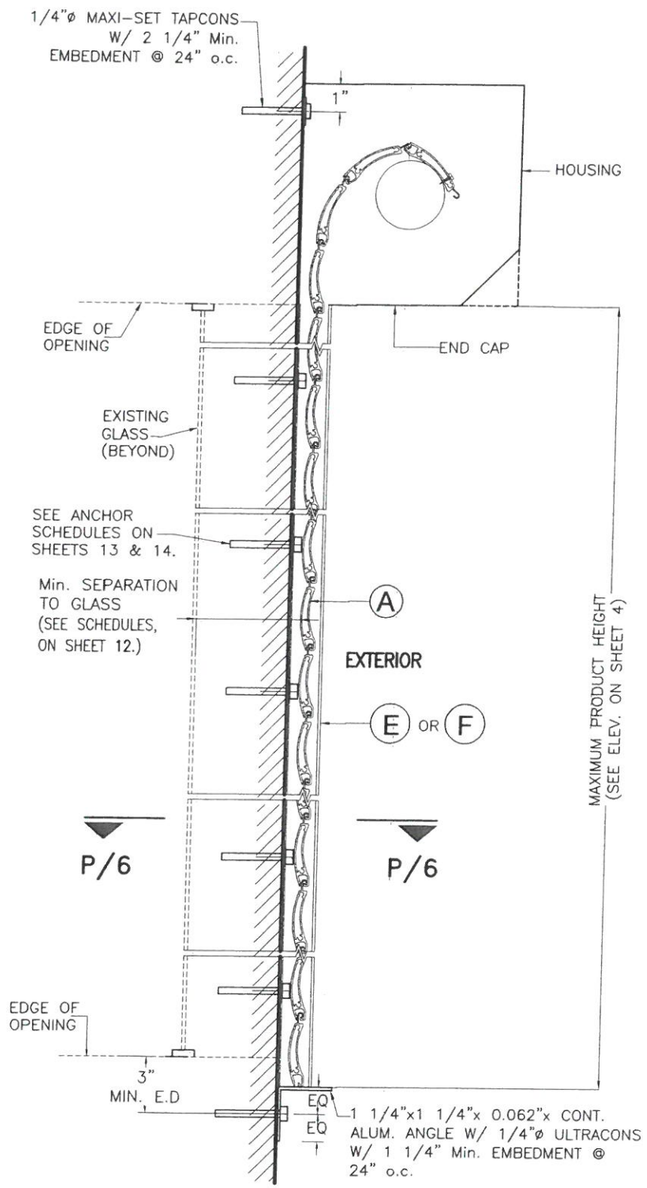

WALL MOUNTING

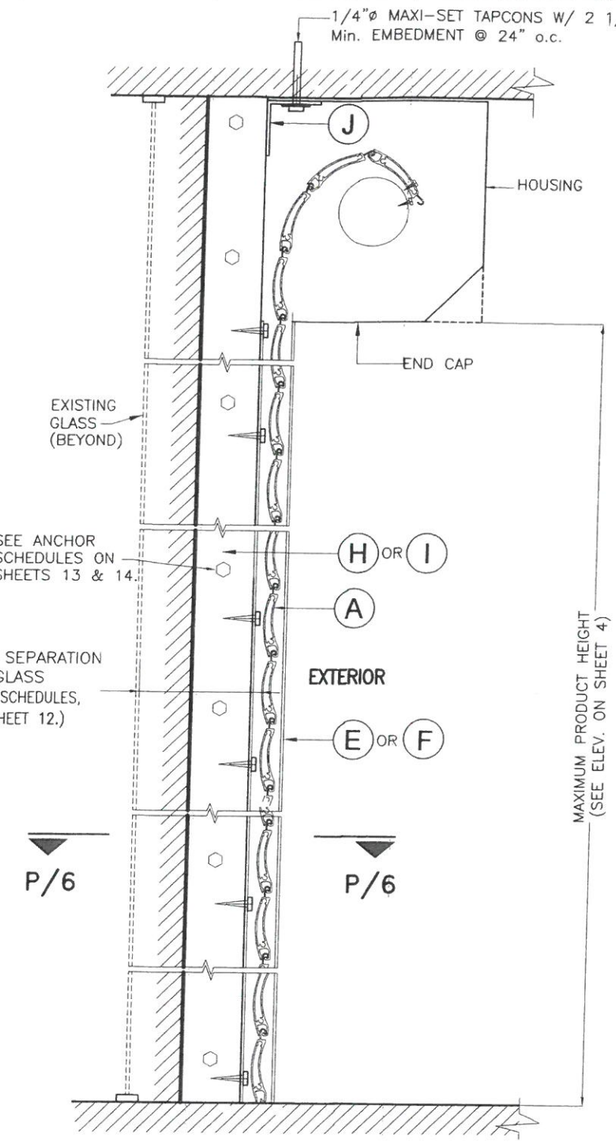

FLOOR/CEILING / TRAPPED MOUNTING

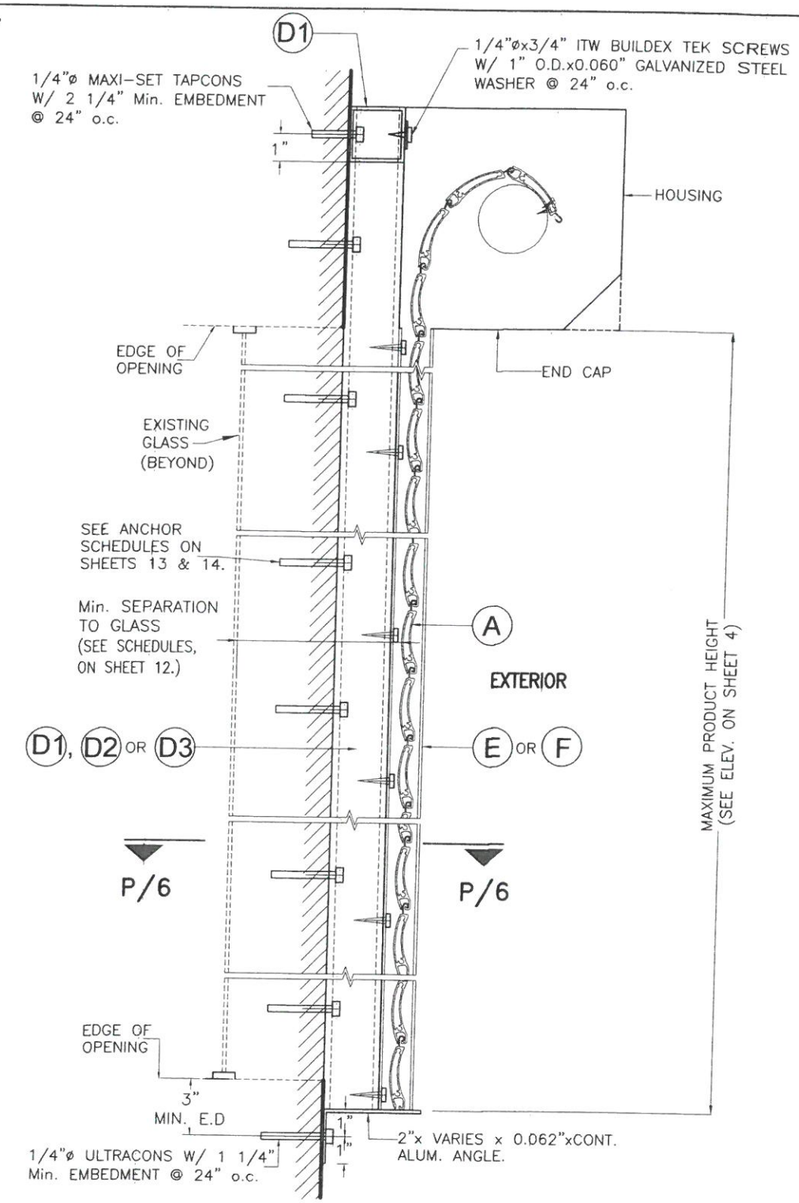

BUILD-OUT MOUNTING

SECTIONS Y–Y

INSTALLATION DETAILS ON EXISTING POURED CONCRETE OR GROUT FILLED CELL CONCRETE BLOCK BUILDINGS FOR END RETENTION SYSTEM AS APPLICABLE

SCALE: 3/16" = 1"

TEXAS DEPARTMENT OF INSURANCE – 2006

7/22/15

P.E. SEAL/SIGNATURE/DATE

WALTER A. TILLIT Jr. P.E.
PROFESSIONAL ENGINEER

6355 N.W. 36th. St., Ste. 305
VIRGINIA GARDENS, Fl. 33166
Phone : (305) 871-1530 , Fax : (305) 871-1531

TEXAS LIC. # 90691
FIRM REGISTRATION # F-13790

58mm ER & NER SLAT BERTHA IMPACT PROTECTIVE ROLLING SYSTEM

AMERICAN SHUTTER SYSTEMS ASSOC., INC.
4268 WESTROADS DRIVE
WEST PALM BEACH, FL. 33407
PHONE: (877)999-2772 FAX: (561)209-8380

REV. No	DESCRIPTION	DATE	REV. No	DESCRIPTION	DATE
1	–	–	3	–	
2	–	–	4	–	

DRAWN BY: F.R.L.

07/15/15
DATE

15-248
DRAWING No

SHEET 5 OF 27

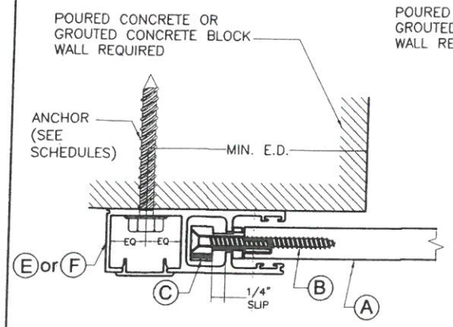

WALL MOUNT

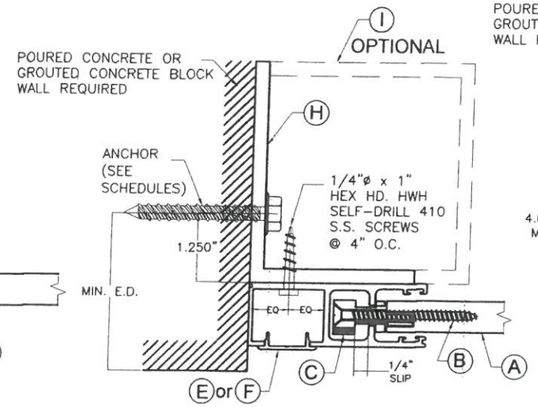

INSIDE/TRAPPED MOUNT

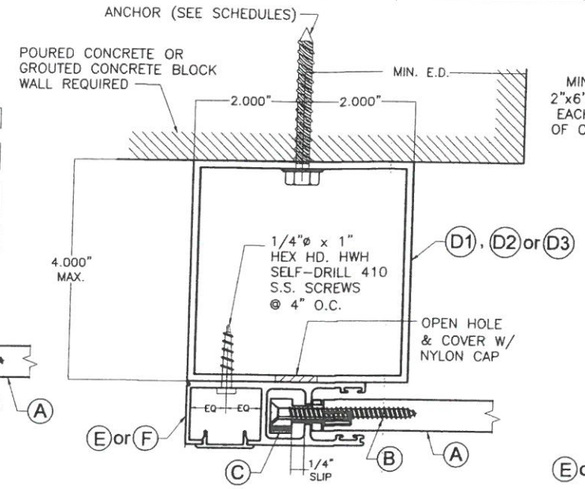

BUILD-OUT MOUNT

SECTIONS P-P (PLAN)

SIDE RAIL CONNECTIONS INTO EXISTING POURED CONCRETE OR GROUT FILLED BLOCK (AS APPLICABLE)

SCALE: 3/8" = 1"

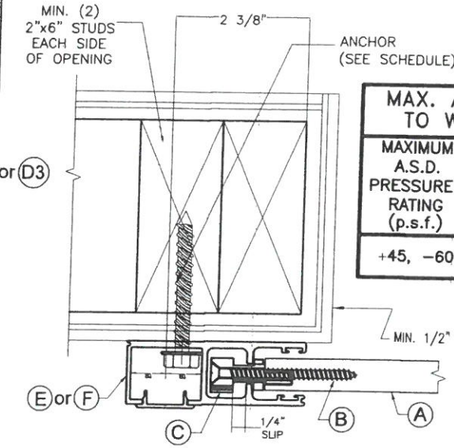

WALL MOUNT

MAX. ANCHORS SPACING TO WOOD SUBSTRATE		
MAXIMUM A.S.D. PRESSURE RATING (p.s.f.)	SIDE RAILS E & F	
	WALL MOUNT	BUILD-OUT MOUNT
+45, −60	4 1/2"	2 1/2"

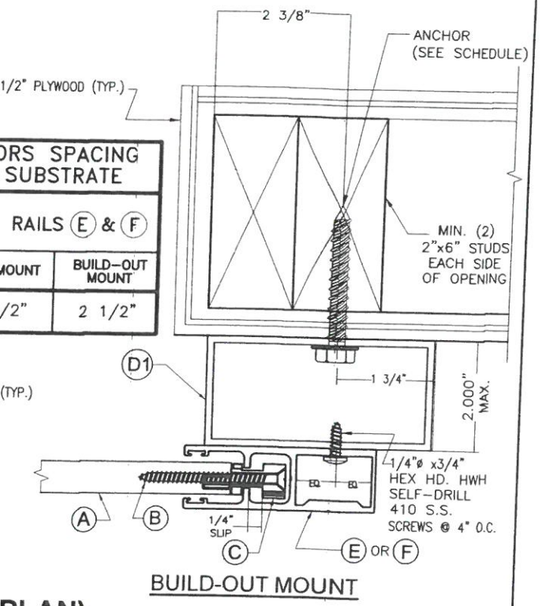

BUILD-OUT MOUNT

SECTIONS O-O (PLAN)

SIDE RAIL CONNECTIONS INTO EXISTING WOOD BUILDINGS

SCALE: 3/8" = 1"

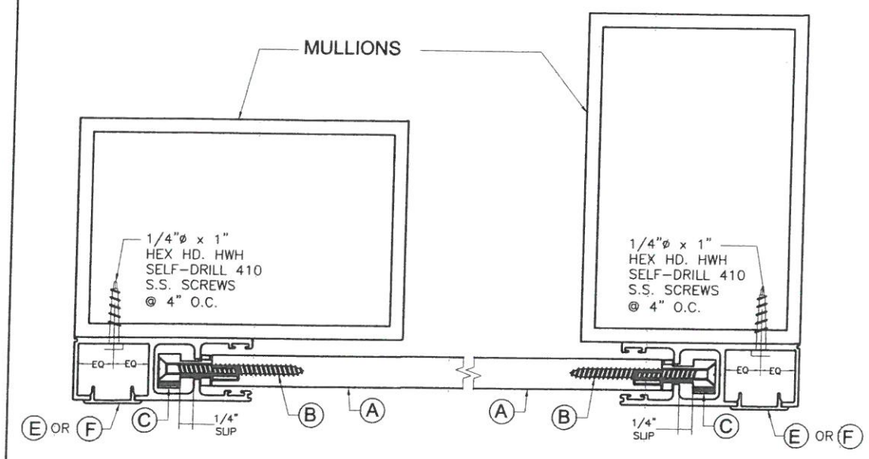

SECTION Q-Q (PLAN)

ORIENTATION #1

FACE MOUNT END MULLION

SECTION Q-Q (PLAN)

ORIENTATION #2

FACE MOUNT END MULLION

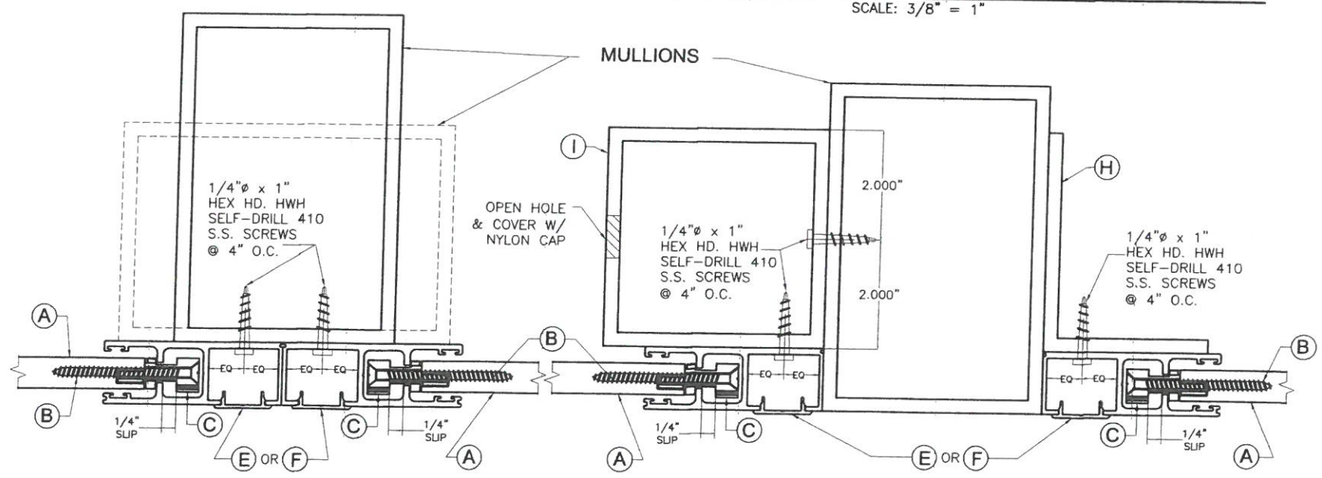

SECTION R-R (PLAN)

ORIENTATIONS #1 & #2

FACE MOUNT INTERIOR MULLION

SECTION R'-R' (PLAN)

ORIENTATION #2

TRAPPED MOUNT INTERIOR MULLION

SIDE RAIL CONNECTIONS INTO MULLIONS

SCALE: 3/8" = 1"

END RETENTION SYSTEM

TEXAS DEPARTMENT OF INSURANCE – 2006

7/22/15

P.E. SEAL/SIGNATURE/DATE

WALTER A. TILLIT Jr. P.E.
PROFESSIONAL ENGINEER

6355 N.W. 36th. St., Ste. 305
VIRGINIA GARDENS, Fl. 33166
Phone : (305) 871-1530 , Fax : (305) 871-1531

TEXAS LIC. # 90691
FIRM REGISTRATION # F-13790

58mm ER & NER SLAT BERTHA IMPACT PROTECTIVE ROLLING SYSTEM

AMERICAN SHUTTER SYSTEMS ASSOC., INC.
4268 WESTROADS DRIVE
WEST PALM BEACH, FL. 33407
PHONE: (877)999-2772 FAX: (561)209-8380

REV. No	DESCRIPTION	DATE	REV. No	DESCRIPTION	DATE
1	–	–	3	–	
2	–	–	4	–	

DRAWN BY: F.R.L.

07/15/15 DATE

15-248 DRAWING No

SHEET 6 OF 27

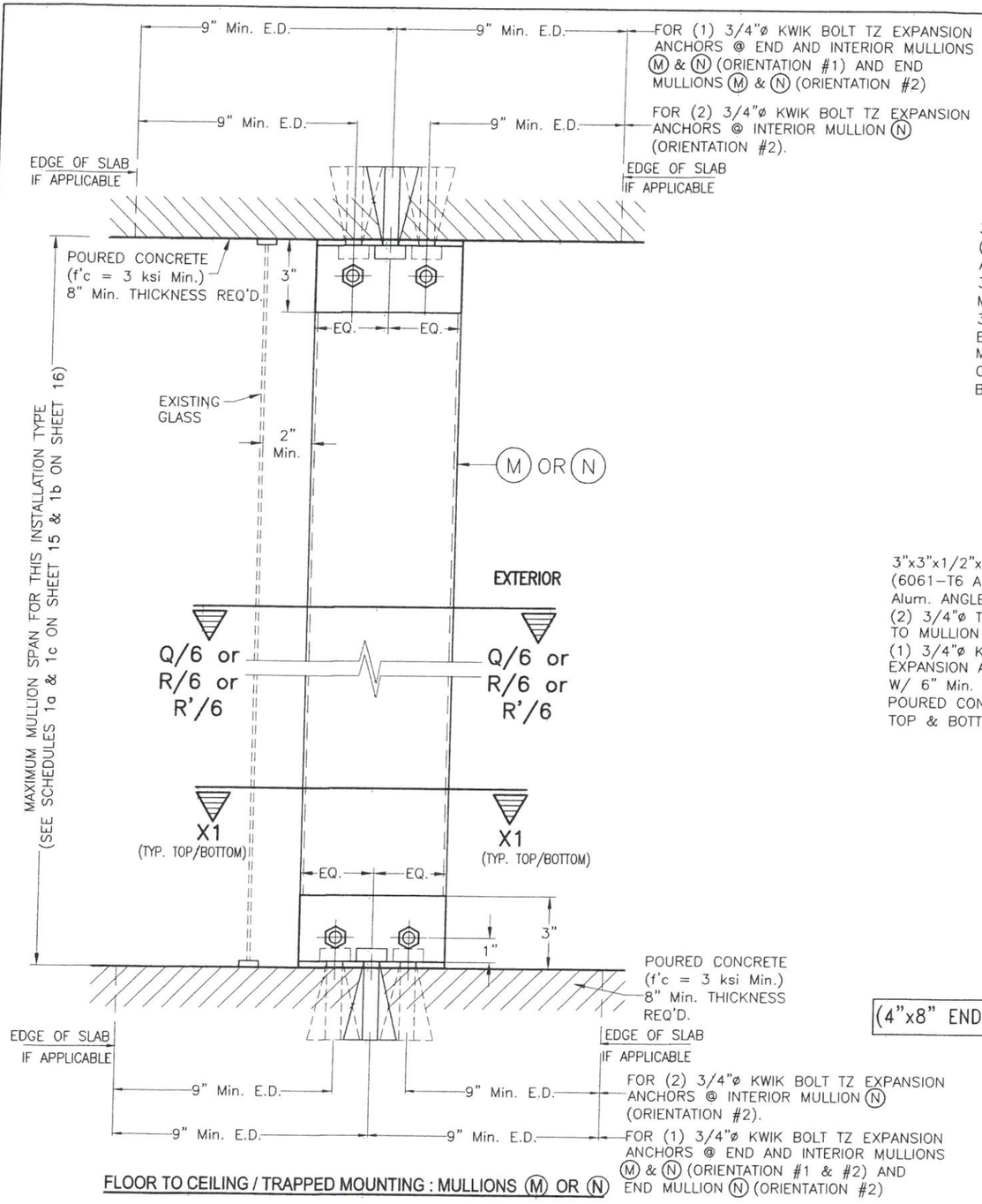

FLOOR TO CEILING / TRAPPED MOUNTING : MULLIONS (M) OR (N)

SECTIONS W-1

END & INTERIOR TRAPPED MOUNTED MULLION INSTALLATION *

APPLICABLE TO ALL INSTALLATIONS EXCEPT THOSE W/ LIMITATIONS COVERED ON SHEET 8

SCALE: 1/8" = 1"

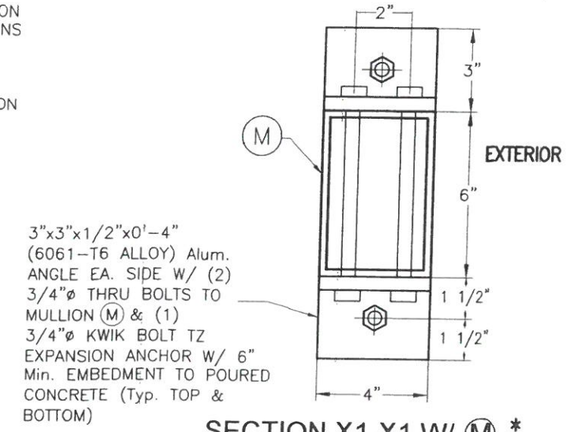

SECTION X1-X1 W/ (M) *

(4"x6" END & INTERIOR MULLION W/ ORIENTATION #1)

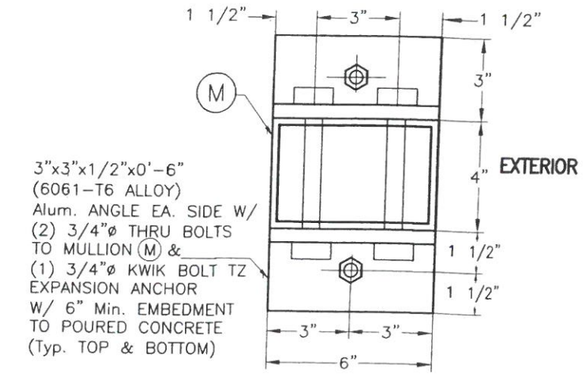

ALTERNATIVE SECTION X1-X1 W/ (M) *

(4"x6" END & INTERIOR MULLION W/ ORIENTATION #2)

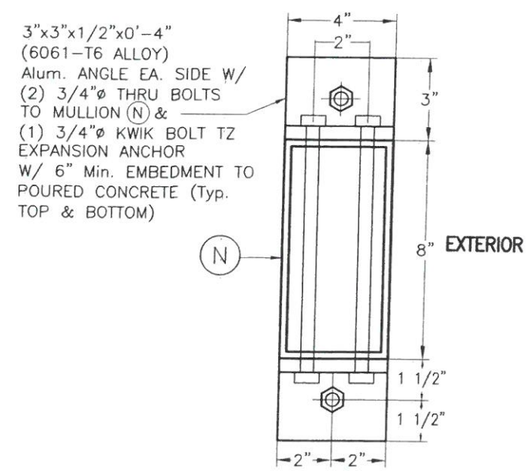

SECTION X1-X1 W/ (N) *

(4"x8" END & INTERIOR MULLION W/ ORIENTATION #1)

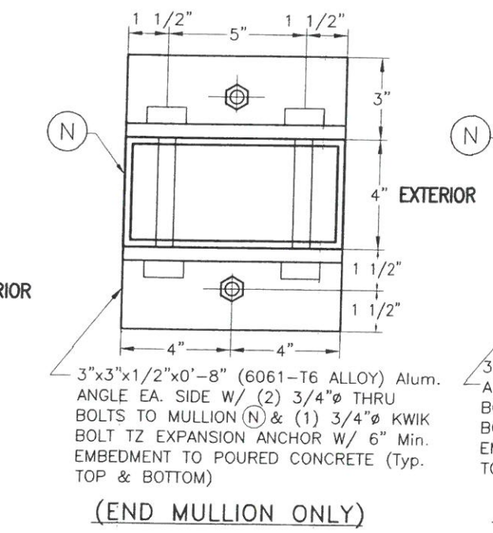

(END MULLION ONLY)

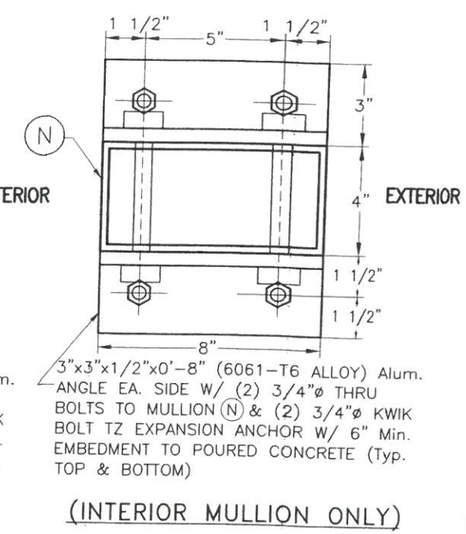

(INTERIOR MULLION ONLY)

ALTERNATIVES SECTION X1-X1 W/ (N) *

(4"x8" END & INTERIOR MULLION W/ ORIENTATION #2)

* SIDE RAILS (E) & (F) AND BOX NOT SHOWN FOR CLARITY.

END RETENTION SYSTEM

TEXAS DEPARTMENT OF INSURANCE – 2006

7/22/15

P.E. SEAL/SIGNATURE/DATE

WALTER A. TILLIT Jr. P.E.
PROFESSIONAL ENGINEER

6355 N.W. 36th. St., Ste. 305
VIRGINIA GARDENS, Fl. 33166
Phone : (305) 871-1530 , Fax : (305) 871-1531

TEXAS LIC. # 90691
FIRM REGISTRATION # F-13790

58mm ER & NER SLAT BERTHA IMPACT PROTECTIVE ROLLING SYSTEM

AMERICAN SHUTTER SYSTEMS ASSOC., INC.
4268 WESTROADS DRIVE
WEST PALM BEACH, FL. 33407
PHONE: (877)999-2772 FAX: (561)209-8380

REV. No	DESCRIPTION	DATE	REV. No	DESCRIPTION	DATE
1	–	–	3	–	
2	–	–	4	–	

DRAWN BY: F.R.L.

07/15/15 DATE

15-248 DRAWING No

SHEET 7 OF 27

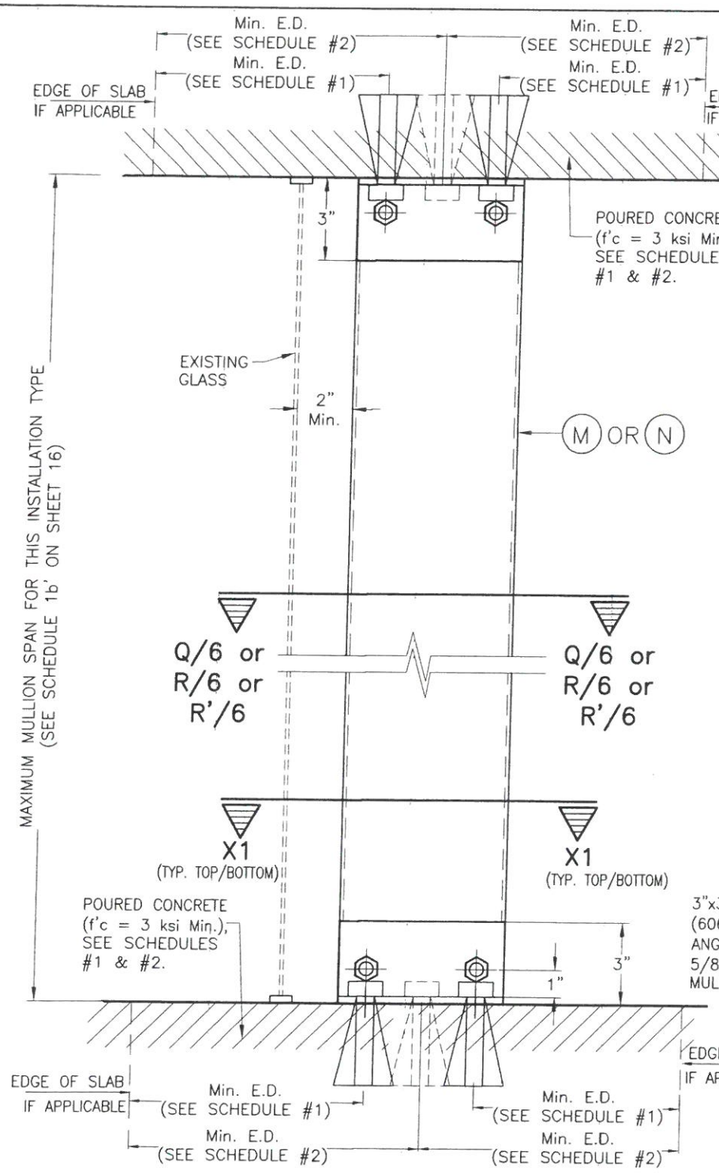

FLOOR TO CEILING / TRAPPED MOUNTING : MULLIONS (M) OR (N)

SECTIONS W-1

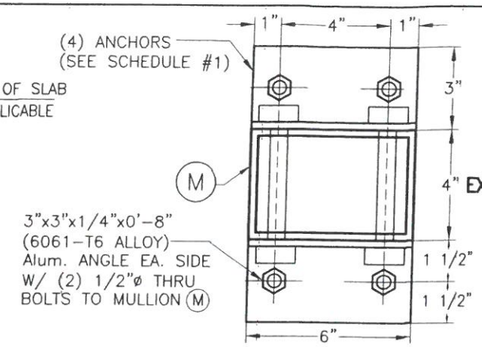

ALTERNATIVE SECTION X1-X1 W/ (M) *

(4"x6" INTERIOR MULLION ONLY W/ ORIENTATION # 2)

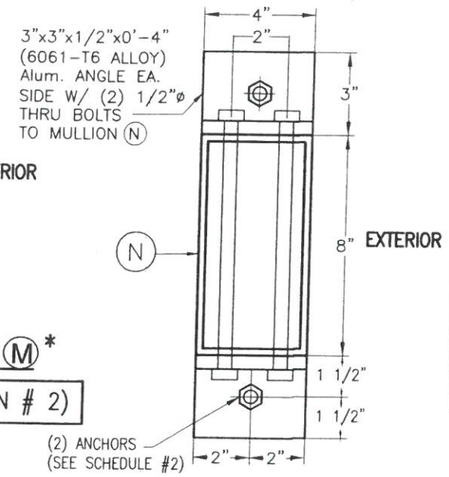

ALTERNATIVE SECTION X1-X1 W/ (N) *

(4"x8" END & INTERIOR MULLION W/ ORIENTATION # 1)

◊ SEE MAXIMUM (M) (INTERIOR) & (N) (END & INTERIOR) TRAPPED MOUNTED MULLIONS SPAN COVERED BY SCHEDULE 1b' FOR INSTALLATION CASES I, Ia & II ON SHEET 16. (LIMITED LOAD, MULLION SPACING AND SPAN INSTALLATION):

INSTALLATION CASE I – RESIDENTIAL AND COMMERCIAL APPLICATIONS WITH ±60.8 p.s.f. MAXIMUM A.S.D. DESIGN LOAD, 12'-0" MAXIMUM MULLION SPACING. SEE SCHEDULES #1 & #2 FOR ANCHOR SPECS.

INSTALLATION CASE Ia – RESIDENTIAL AND COMMERCIAL APPLICATION W/ ±60.8 p.s.f. MAXIMUM A.S.D. DESIGN LOAD, 8'-0" MAXIMUM MULLION SPACING. SEE SCHEDULES #1 & #2 FOR ANCHOR SPECS.

INSTALLATION CASE II – COMMERCIAL APPLICATION FOR ±100.0 p.s.f. MAXIMUM A.S.D. DESIGN LOAD, 8'-0" MAXIMUM MULLION SPACING. SEE SCHEDULES #1 & #2 FOR ANCHOR SPECS.

* SIDE RAILS (E) & (F) AND BOX NOT SHOWN FOR CLARITY.

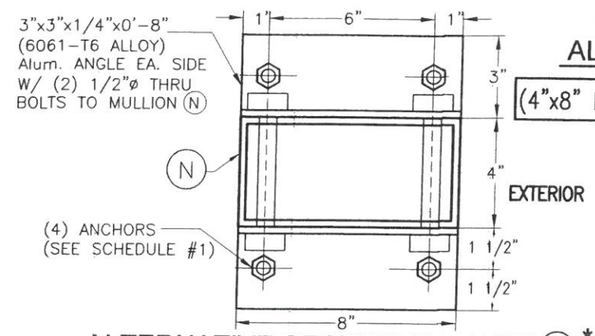

ALTERNATIVE SECTION X1-X1 W/ (N) *

(4"x8" INTERIOR MULLION ONLY W/ ORIENTATION # 2)

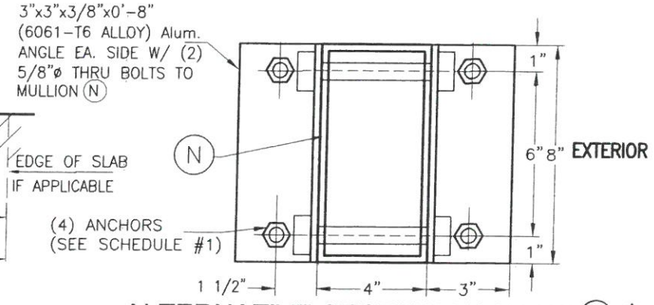

ALTERNATIVE SECTION X1-X1 W/ (N) *

(4"x8" END & INTERIOR MULLION W/ ORIENTATION # 1)

SCHEDULE #1

INSTALLATION CASES	MIN. SLAB THICKNESS REQ'D.	ANCHOR TYPE & SIZE (TYP. TOP & BOTTOM)	MIN. ANCHOR EMBEDMENT	MIN. EDGE DISTANCE FOR ANCHOR
I	4"	3/8"ø HILTI INC KWIK HUS-H SCREW & 3/8"ø POWER FASTENER WEDGE-BOLT ANCHOR FOR (M) & (N) (INTERIOR) MULLIONS W/ ORIENTATION #2.	2 1/2"	5 1/2"
		1/2"ø HILTI INC KWIK HUS-H SCREW & 1/2"ø POWER FASTENER WEDGE- BOLT ANCHOR FOR (N) (END & INTERIOR) MULLION W/ ORIENTATION #1.	3"	6"
Ia	4"	1/2"ø HILTI INC KWIK BOLT TZ ONLY FOR (M) & (N) INTERIOR MULLIONS W/ ORIENTATION #2) & (N) (END MULLION W/ ORIENTATION #1).	2 1/2"	5 1/2"
		1/2"ø HILTI INC KWIK HUS-H SCREW & 1/2"ø POWER FASTENER WEDGE- BOLT ANCHOR FOR (M) & (N) (END OR INTERIOR MULLION) W/ ORIENTATIONS #1 OR #2.	3"	6"
II	6"	1/2"ø HILTI INC KWIK BOLT TZ ONLY FOR (M) & (N) INTERIOR MULLIONS W/ ORIENTATION #2) & (N) (END MULLION W/ ORIENTATION #1).	3 1/4"	7 1/2"
		1/2"ø HILTI INC KWIK HUS-H SCREW OR 1/2"ø POWER FASTENER WEDGE- BOLT ANCHOR SEE * NOTE ON SCHEDULE 1b' ON SHEET 25. VALID FOR END & INTERIOR MULLIONS (M) & (N) W/ ORIENTATIONS #1 OR #2.	3"	6"

SCHEDULE #2

INSTALLATION CASES	MIN. SLAB THICKNESS REQ'D.	ANCHOR TYPE & SIZE (TYP. TOP & BOTTOM)	MIN. ANCHOR EMBEDMENT	MIN. EDGE DISTANCE FOR ANCHOR
I, Ia & II	4"	5/8"ø HILTI INC KWIK HUS-H SCREW & 5/8"ø POWER FASTENER WEDGE-BOLT ANCHOR W/ ORIENTATION #1.	2 1/2"	7 1/2"

◊ END & INTERIOR TRAPPED MOUNTED MULLION INSTALLATION *

APPLICABLE TO A LIMITED LOAD, MULLION SPAN AND MULLION SPACING INSTALLATIONS

SCALE: 1/8" = 1"

END RETENTION SYSTEM

TEXAS DEPARTMENT OF INSURANCE – 2006

7/22/15

P.E. SEAL/SIGNATURE/DATE

WALTER A. TILLIT Jr. P.E.
PROFESSIONAL ENGINEER

6355 N.W. 36th. St., Ste. 305
VIRGINIA GARDENS, Fl. 33166
Phone : (305) 871-1530 , Fax : (305) 871-1531

TEXAS LIC. # 90691
FIRM REGISTRATION # F-13790

58mm ER & NER SLAT BERTHA IMPACT PROTECTIVE ROLLING SYSTEM

AMERICAN SHUTTER SYSTEMS ASSOC., INC.
4268 WESTROADS DRIVE
WEST PALM BEACH, FL. 33407
PHONE: (877)999-2772 FAX: (561)209-8380

REV. No	DESCRIPTION	DATE	REV. No	DESCRIPTION	DATE
1	–	–	3	–	
2	–	–	4	–	

DRAWN BY: F.R.L.

07/15/15 DATE

15-248 DRAWING No

SHEET 8 OF 27

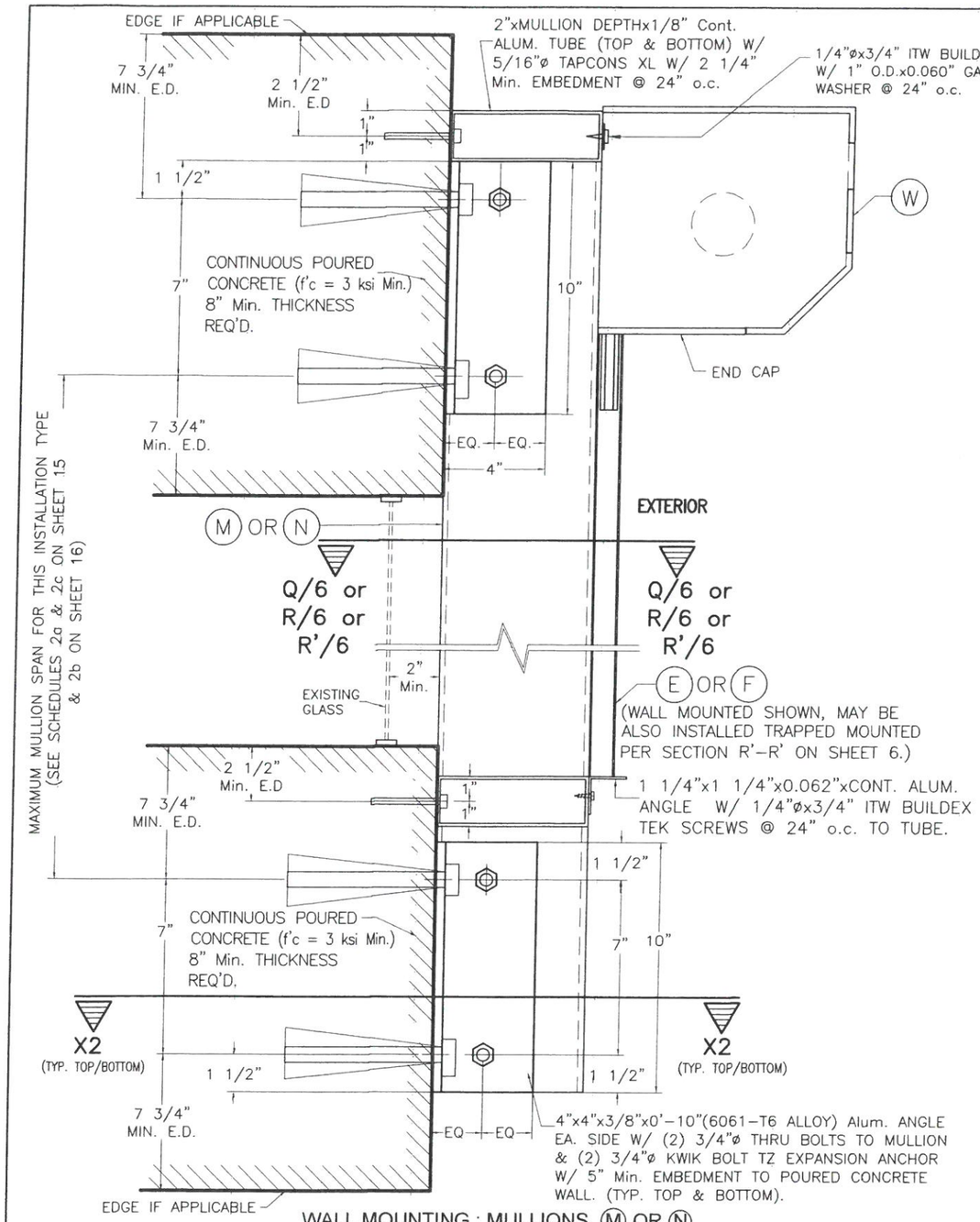

WALL MOUNTING : MULLIONS (M) OR (N)
POURED CONCRETE WALL

SECTION W-2

END & INTERIOR WALL MOUNTED MULLION INSTALLATION
APPLICABLE TO ALL INSTALLATIONS EXCEPT THOSE W/ LIMITATIONS COVERED ON SHEET 10

SCALE: 1/8" = 1"

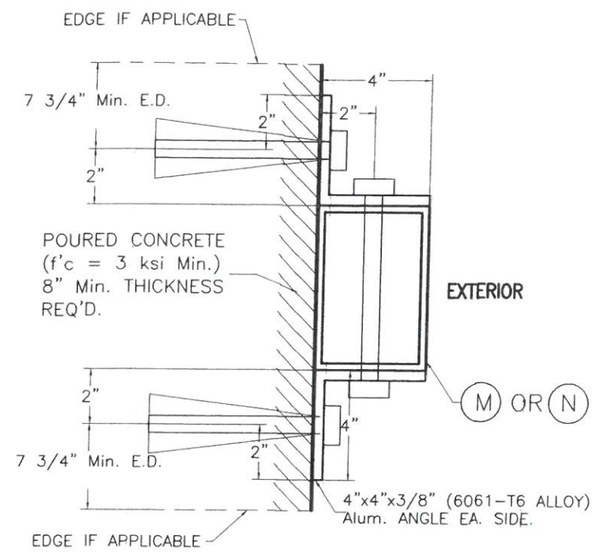

SECTION X2-X2 W/ (M) OR (N) *

(END & INTERIOR MULLION)
(W/ ORIENTATION # 1)
(6"x4" or 8"x4")

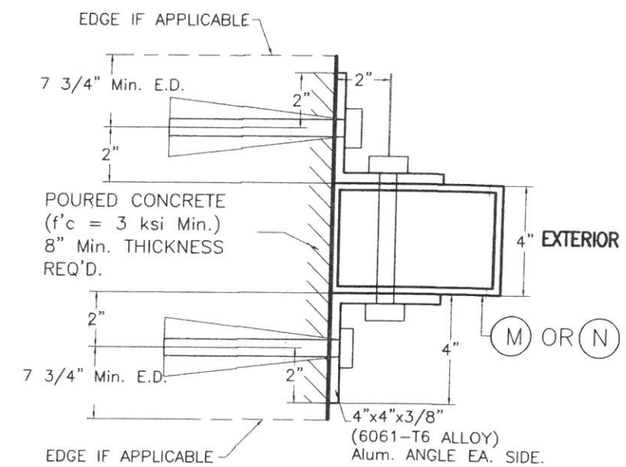

ALTERNATIVE SECTION X2-X2 W/ (M) OR (N) *

(END & INTERIOR MULLION)
(W/ ORIENTATION # 2)
(4"x6" or 4"x8")

* SIDE RAILS (E) & (F) AND BOX NOT SHOWN FOR CLARITY.

END RETENTION SYSTEM

TEXAS DEPARTMENT OF INSURANCE – 2006

7/27/15
P.E SEAL/SIGNATURE/DATE

WALTER A. TILLIT Jr. P.E.
PROFESSIONAL ENGINEER
6355 N.W. 36th. St., Ste. 305
VIRGINIA GARDENS, Fl. 33166
Phone : (305) 871-1530 , Fax : (305) 871-1531
TEXAS LIC. # 90691
FIRM REGISTRATION # F-13790

58mm ER & NER SLAT BERTHA IMPACT PROTECTIVE ROLLING SYSTEM

AMERICAN SHUTTER SYSTEMS ASSOC., INC.
4268 WESTROADS DRIVE
WEST PALM BEACH, FL. 33407
PHONE: (877)999-2772 FAX: (561)209-8380

REV. No	DESCRIPTION	DATE	REV. No	DESCRIPTION	DATE
1	–	–	3	–	
2	–	–	4	–	

DRAWN BY: F.R.L.
07/15/15 DATE
15-248 DRAWING No
SHEET 9 OF 27

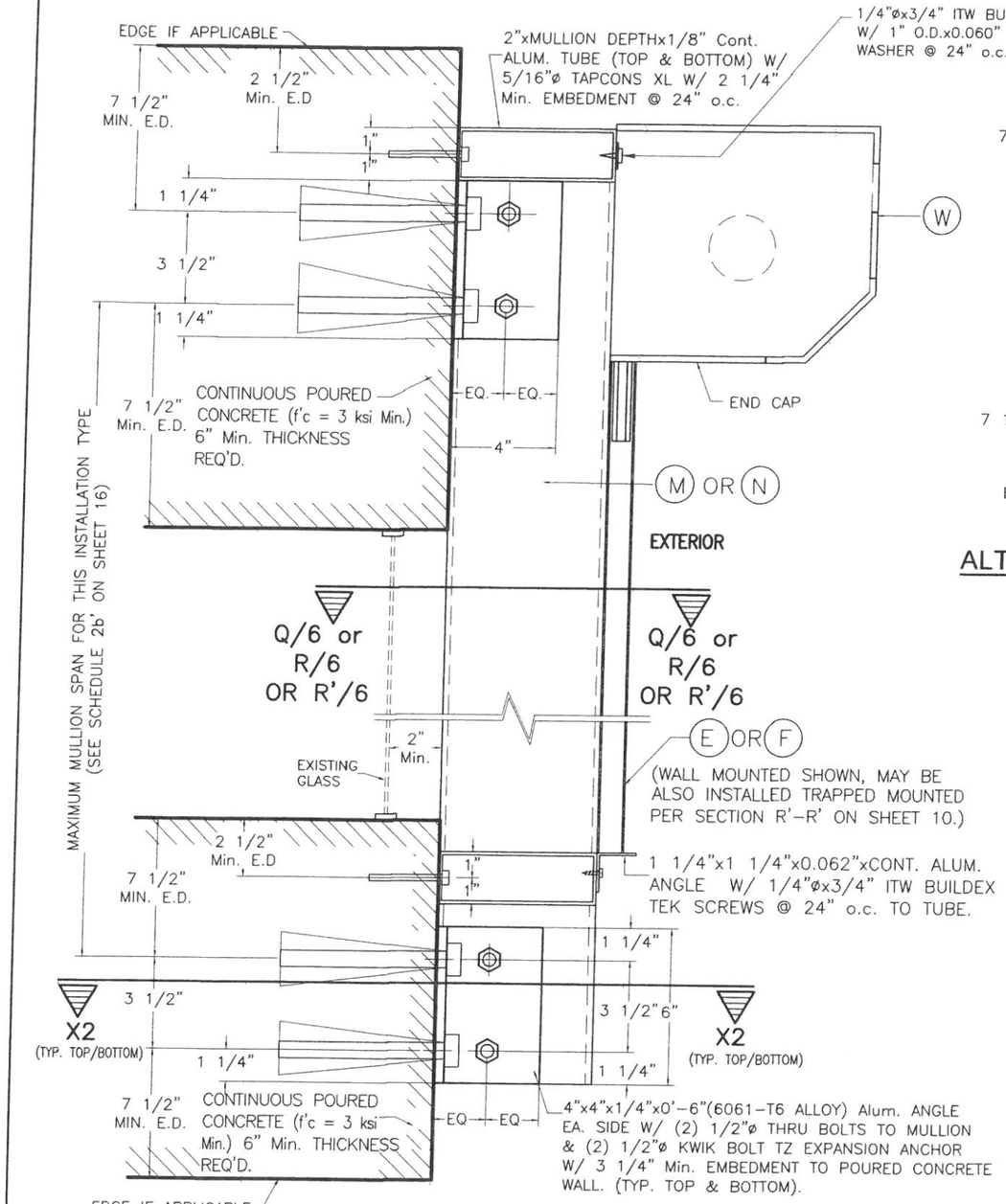

WALL MOUNTING : MULLIONS (M) OR (N)
POURED CONCRETE WALL

SECTION W-2

◊ END & INTERIOR WALL MOUNTED MULLION INSTALLATION

APPLICABLE TO A LIMITED LOAD, MULLION SPAN AND MULLION SPACING INSTALLATIONS

SCALE: 1/8" = 1"

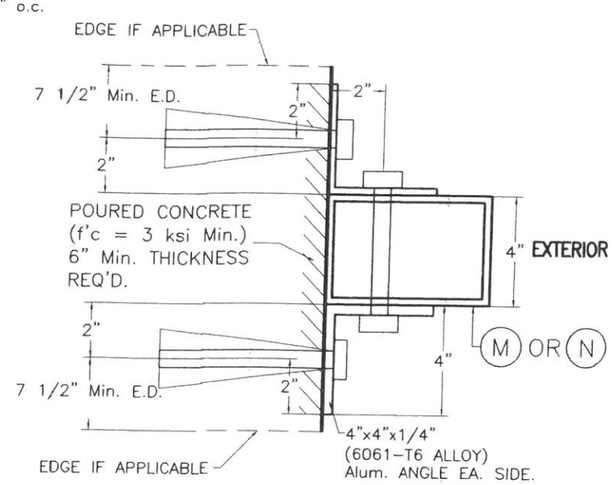

ALTERNATIVE SECTION X2-X2 W/ (M) OR (N) *

(INTERIOR MULLION)
(W/ ORIENTATION # 2)
(4"x6" or 4"x8")

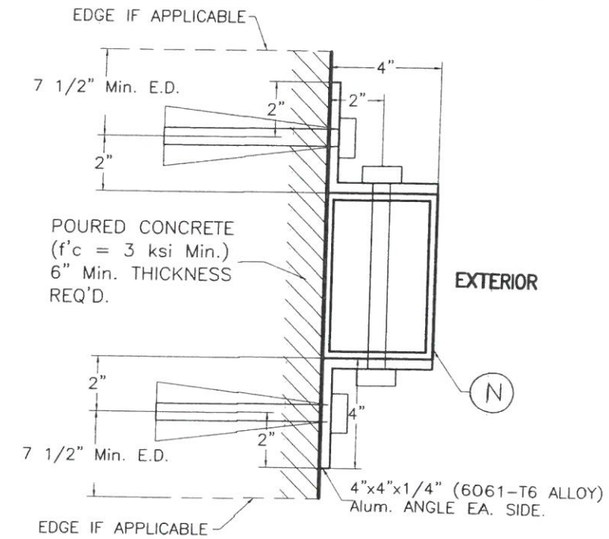

ALTERNATIVE SECTION X2-X2 W/ (N) *

(END & INTERIOR MULLIONS)
(W/ ORIENTATION # 1)
(8"x4")

*** SIDE RAILS (E) & (F) AND BOX NOT SHOWN FOR CLARITY.**

◊ SEE MAXIMUM (M) (INTERIOR) & (N) (END & INTERIOR) WALL MOUNTED MULLIONS SPAN COVERED BY SCHEDULE 2b' FOR INSTALLATION CASES I' & II' ON SHEET 16 (LIMITED LOAD, MULLION SPACING AND SPAN INSTALLATION):

INSTALLATION CASE I' – RESIDENTIAL AND COMMERCIAL APPLICATIONS WITH ±60.8 p.s.f. MAXIMUM A.S.D. DESIGN LOAD, 12'-0" MAXIMUM MULLION SPACING. VALID FOR CONNECTION TO CONCRETE W/ HILTI INC KWIK HUS-H OR POWER FASTENERS WEDGE-BOLT ANCHORS.

INSTALLATION CASE II' – COMMERCIAL APPLICATION FOR ±100.0 p.s.f. MAXIMUM A.S.D. DESIGN LOAD, 8'-0" MAXIMUM MULLION SPACING. VALID FOR CONNECTION TO CONCRETE W/ HILTI INC KWIK BOLT TZ ANCHORS.

END RETENTION SYSTEM

TEXAS DEPARTMENT OF INSURANCE – 2006

STATE OF TEXAS
7/24/15
WALTER A. TILLIT JR.
90691
LICENSED PROFESSIONAL ENGINEER

P.E. SEAL/SIGNATURE/DATE

WALTER A. TILLIT Jr. P.E.
PROFESSIONAL ENGINEER

6355 N.W. 36th. St., Ste. 305
VIRGINIA GARDENS, Fl. 33166
Phone : (305) 871-1530 , Fax : (305) 871-1531

TEXAS LIC. # 90691
FIRM REGISTRATION # F-13790

58mm ER & NER SLAT BERTHA IMPACT PROTECTIVE ROLLING SYSTEM

AMERICAN SHUTTER SYSTEMS ASSOC., INC.
4268 WESTROADS DRIVE
WEST PALM BEACH, FL. 33407
PHONE: (877)999-2772 FAX: (561)209-8380

REV. No	DESCRIPTION	DATE	REV. No	DESCRIPTION	DATE
1	–	–	3	–	
2	–	–	4	–	

DRAWN BY: F.R.L.
07/15/15 DATE
15-248 DRAWING No
SHEET 10 OF 27

END RETENTION SYSTEM

TYPICAL MANDATORY PROCEDURE FOR VERIFYING PRODUCT CODE COMPLIANCE RELATED TO ITS INSTALLATION INTO EXISTING POURED CONCRETE OR GROUTED CONCRETE BLOCK STRUCTURES

STEP 1: OBTAIN JOB SITE'S A.S.D. DESIGN LOAD (p.s.f.) FOR THE OPENING AND DESIRED PRODUCT SPAN "L" (ft) TO PROTECT (SEE GENERAL NOTE #1, SHEET 1).

STEP 2: ENTER TO CHARTS **Ia** OR **Ib** ON SHEET 12 TO DETERMINE, BASED ON 1/4" SLAT SLIP (in), ANCHOR TYPE AT SIDE RAILS; A.S.D. DESIGN LOAD (p.s.f.); AND THE MAXIMUM SLAT SPAN "LMAX" (ft).

THE FOLLOWING INFORMATION IS PROVIDED AT CHARTS **Ia, Ib & Ic** TO PROCEED WITH PRODUCT INSTALLATION VERIFICATION:

- ENTER A.S.D. DESIGN LOAD: SEE STEP (1) ABOVE.

  LMAX: THIS IS THE MAXIMUM ALLOWABLE SLAT SPAN FOR WHICH A 1/4" SLAT SLIP MAY BE USED, FOR A GIVEN A.S.D. DESIGN LOAD.

- MINIMUM REQUIRED SEPARATION TO GLASS IS PROVIDED ON CHART **Ic** (SEE STEP 4).

STEP 3: OBTAIN INFORMATION ON PRODUCT'S SIDE RAIL ANCHOR SPACING REQUIREMENTS FOR CONNECTION TO EXISTING STRUCTURE FROM ANCHOR SCHEDULES IIa, IIb, IIIa & IIIb ON SHEETS 13 & 14. ENTER SCHEDULES WITH FINALLY DETERMINED ANCHOR TYPE, SUBSTRATE, MOUNTING TYPE, A.S.D. DESIGN LOAD & PRODUCT SPAN AND OBTAIN MAXIMUM ANCHOR SPACING (INCHES ON CENTERS). SEE GENERAL NOTE 5 ON SHEET 1 FOR ANCHOR SPECS.

STEP 4: IF PRODUCT INSTALLATION INCLUDES MULLIONS, THE FOLLOWING MANDATORY ADDITIONAL PROCEDURES ARE APPLICABLE.

PROCEDURE 4a:

1. MINIMUM SEPARATION TO GLASS FOR SLATS IF MULLIONS ARE USED SHALL BE BASED ON INSTALLATIONS INDICATED ON CHART **Ic** ON SHEET 12. IT SHALL BE MEASURED FROM BACK OF SLAT TO GLASS.
2. ENTER SCHEDULES 1a THRU 2c ON SHEETS 15 & 16 W/ A.S.D. DESIGN LOAD ; MAXIMUM MULLION SPACING (MAX., 12', 8' OR 7'), AND DETERMINE MAXIMUM MULLION SPAN (HEIGHT) W/ ALLOWABLE INTERPOLATION IN BETWEEN SPACINGS FOR A GIVEN ((M),(N)), MULLION TYPE & MULLION ORIENTATION.
3. SEE SHEETS 7 THRU 10 FOR REQUIRED MULLION CONNECTION DETAILS AT TOP & BOTTOM FOR FLOOR TO CEILING (TRAPPED) OR WALL MOUNTINGS OF MULLIONS INTO CONCRETE FOR A GIVEN MULLION TYPE ((M),(N))

TEXAS DEPARTMENT OF INSURANCE – 2006

STATE OF TEXAS
WALTER A. TILLIT JR.
LICENSED PROFESSIONAL ENGINEER

7/22/15

P.E. SEAL/SIGNATURE/DATE

WALTER A. TILLIT Jr. P.E.
PROFESSIONAL ENGINEER

6355 N.W. 36th. St., Ste. 305
VIRGINIA GARDENS, Fl. 33166
Phone : (305) 871-1530 , Fax : (305) 871-1531

TEXAS LIC. # 90691
FIRM REGISTRATION # F-13790

58mm ER & NER SLAT BERTHA IMPACT PROTECTIVE ROLLING SYSTEM

AMERICAN SHUTTER SYSTEMS ASSOC., INC.
4268 WESTROADS DRIVE
WEST PALM BEACH, FL. 33407
PHONE: (877)999-2772 FAX: (561)209-8380

REV. No	DESCRIPTION	DATE	REV. No	DESCRIPTION	DATE
1	–	–	3	–	
2	–	–	4	–	

DRAWN BY: F.R.L.

07/15/15 DATE

15-248 DRAWING No

SLAT PERFORMANCE CHARTS (POURED CONCRETE)

SLAT PERFORMANCE CHARTS Ia, Ib & Ic: (ONLY VALID FOR 1/4" SLIP)

FOR A GIVEN A.S.D. DESIGN LOAD (p.s.f), PRODUCT MOUNT CONDITION INCLUDING ANCHOR TYPE

	CHART Ia				CHART Ib				CHART Ic
	USE MAXIMUM VALUE BETWEEN POSITIVE AND NEGATIVE A.S.D. LOAD								USE MAXIMUM POSITIVE A.S.D. LOAD VALUE
	3/8"Ø WEDGE BOLT ANCHOR				5/16"ø ULTRACON ANCHOR				
A.S.D. DESIGN LOAD (psf)	MAX. SLAT SPAN "LMAX." (FT)				MAX. SLAT SPAN "LMAX." (FT)				REQUIRED MIN. SEPARATION TO GLASS MEASURED TO BACK OF SLAT (in)**
	WALL MOUNT SEE NOTES *	TRAPPED MOUNT SEE NOTES *	BUILD-OUT MOUNT W/ 01 SEE NOTES *	BUILD-OUT MOUNT W/ 02, 03 SEE NOTES *	WALL MOUNT SEE NOTES *	TRAPPED MOUNT SEE NOTES *	BUILD-OUT MOUNT W/ 01 SEE NOTES *	BUILD-OUT MOUNT W/ 02, 03 SEE NOTES *	
30.0	22'-10"	22'-6"	20'-0"	17'-0"	18'-9"	14'-6"	12'-0"	10'-3"	8 1/4"
35.0	22'-10"	22'-6"	18'-0"	15'-3"	16'-10"	13'-0"	11'-0"	9'-3"	8 1/4"
40.0	22'-10"	22'-0"	16'-6"	14'-0"	15'-6"	12'-0"	10'-0"	8'-5"	8 1/4"
45.0	21'-0"	21'-10"	15'-0"	13'-0"	14'-3"	11'-0"	9'-6"	7'-10"	8"
50.0	20'-0"	19'-10"	14'-0"	12'-3"	13'-0"	10'-4"	8'-9"	7'-4"	7 3/4"
55.0	19'-0"	19'-0"	13'-3"	11'-4"	12'-0"	10'-0"	8'-3"	6'-10"	7 1/2"
60.0	17'-9"	18'-0"	12'-3"	10'-9"	11'-3"	9'-6"	7'-9"	6'-6"	7 1/2"
65.0	16'-10	17'-0"	11'-6"	10'-3"	10'-9"	9'-0"	7'-6"	6'-3"	7 1/4"
70.0	16'-0"	16'-0"	10'-9"	9'-9"	10'-4"	8'-9"	7'-3"	6'-0"	7"
75.0	15'-0"	15'-0"	10'-3"	9'-3"	10'-0"	8'-5"	7'-0"	5'-10"	7"
80.0	14'-6"	14'-3"	9'-0"	8'-9"	9'-6"	7'-6"	6'-9"	5'-9"	6 3/4"
85.0	13'-6"	13'-9"	9'-4"	8'-4"	9'-0"	7'-2"	6'-8"	5'-8"	6 1/2"
90.0	12'-6"	13'-3"	9'-0"	8'-0"	8'-9"	6'-9"	6'-6"	5'-7"	6 1/2"
95.0	11'-6"	12'-9"	8'-9"	7'-8"	8'-6"	6'-4"	6'-4"	5'-6"	6 1/8"
100.0	10'-6"	12'-3"	8'-6"	7'-5"	8'-3"	6'-0"	6'-2"	5'-5"	6"
105.0	9'-6"	11'-9"	8'-3"	7'-2"	8'-0"	5'-11"	6'-1"	5'-4"	5 5/8"
110.0	9'-5"	11'-3"	8'-0"	7'-0"	7'-9"	5'-9"	6'-0"	5'-3"	5 5/8"
115.0	9'-4"	11'-0"	7'-10"	6'-10"	7'-7"	5'-6"	5'-11"	5'-2"	5 5/8"
120.0	9'-3"	10'-9"	7'-9"	6'-8"	7'-6"	5'-5"	5'-10"	5'-0"	5 5/8"
125.0	9'-0"	10'-7"	7'-6"	6'-6"	7'-4"	5'-4"	5'-9"	4'-11"	5 1/2"
130.0	8'-10"	10'-6"	7'-3"	6'-4"	7'-3"	5'-3"	5'-8"	4'-10"	5 1/2"
135.0	8'-9"	10'-3"	7'-0"	6'-2"	7'-0"	5'-2"	5'-7"	4'-9"	5 1/2"
140.0	8'-6"	10'-0"	6'-10"	6'-0"	6'-10"	5'-0"	5'-6"	4'-8"	5 1/2"

**SEE NOTE 4 BELOW

* NOTES:

1. ABOVE INDICATED MAX. SLAT SPANS MAY BE USED AS LONG AS ANCHOR SPACING SCHEDULES ON SHEET 13 INDICATE THAT AN ANCHOR SPACING IS AVAILABLE FOR THE CORRESPONDING SLAT SPAN AND DESIGN LOAD.
2. REQUIRES SIDE RAILS FASTENED TO EXISTING STRUCTURE WITH **3/8"ø WEDGE-BOLT ANCHOR OR 5/16"ø ULTRACON ANCHOR,** INTO POURED CONCRETE OR WITH 1/4"ø HEX HD. HWH SELF-DRILL 410 S.S. SCREWS AT MULLIONS CONNECTION. VALID FOR WALL MOUNTED, TRAPPED MOUNTED, AND BUILD-OUT MOUNTED.
3. MAXIMUM SLAT SPANS FOR INTERMEDIATE LOADS MAY BE DETERMINED BY LINEAR INTERPOLATION BETWEEN END VALUES.
4. MIN. SEPARATION TO GLASS FOR WIND ZONES 1, 2 & 3 IS 1" AND AS SHOWN ON CHART Ic FOR WIND ZONE 4, PER ASTM E 1996.

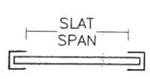

SLAT SPAN DEFINITION

END RETENTION SYSTEM

SLAT PERFORMANCE CHARTS (GROUTED CONCRETE BLOCK)

SLAT PERFORMANCE CHARTS Ia, Ib & Ic: (ONLY VALID FOR 1/4" SLIP)

FOR A GIVEN A.S.D. DESIGN LOAD (p.s.f), PRODUCT MOUNT CONDITION INCLUDING ANCHOR TYPE

	CHART Ia				CHART Ib				CHART Ic
	USE MAXIMUM VALUE BETWEEN POSITIVE AND NEGATIVE A.S.D. LOAD								USE MAXIMUM POSITIVE A.S.D. LOAD VALUE
	3/8"Ø KWIK HUS BOLT ANCHOR				5/16"ø ULTRACON ANCHOR				
A.S.D. DESIGN LOAD (psf)	MAX. SLAT SPAN "LMAX." (FT)				MAX. SLAT SPAN "LMAX." (FT)				REQUIRED MIN. SEPARATION TO GLASS MEASURED TO BACK OF SLAT (in)**
	WALL MOUNT SEE NOTES *	TRAPPED MOUNT SEE NOTES *	BUILD-OUT MOUNT W/ 01 SEE NOTES *	BUILD-OUT MOUNT W/ 02, 03 SEE NOTES *	WALL MOUNT SEE NOTES *	TRAPPED MOUNT SEE NOTES *	BUILD-OUT MOUNT W/ 01 SEE NOTES *	BUILD-OUT MOUNT W/ 02, 03 SEE NOTES *	
30.0	14'-6"	14'-7"	11'-0"	9'-7"	10'-6"	8'-6"	8'-0"	7'-6"	7 1/2"
35.0	13'-2"	13'-3"	10'-0"	8'-11"	9'-6"	7'-10"	7'-4"	7'-2"	7"
40.0	12'-0"	12'-0"	9'-4"	8'-4"	9'-0"	7'-4"	6'-9"	7'-0"	7"
45.0	11'-3"	11'-0"	8'-10"	7'-11"	8'-6"	6'-10"	6'-7"	6'-8"	6 1/2"
50.0	10'-6"	10'-3"	8'-4"	7'-6"	8'-2"	6'-6"	6'-4"	6'-5"	6 1/2"
55.0	9'-11"	9'-7"	7'-11"	7'-3"	7'-9"	6'-3"	6'-2"	6'-3"	6 1/8"
60.0	9'-4"	9'-0"	7'-7"	6'-11"	7'-3"	6'-0"	6'-0"	6'-0"	6"
65.0	8'-11"	8'-7"	7'-4"	6'-9"	7'-0"	5'-10"	5'-11"	5'-11"	6"
70.0	8'-8"	8'-2"	7'-1"	6'-6"	6'-7"	5'-7"	5'-10"	5'-10"	6"
75.0	8'-3"	7'-10"	6'-10"	6'-4"	6'-6"	5'-6"	5'-9"	5'-6"	5 3/4"
80.0	7'-11"	7'-6"	6'-8"	6'-2"	6'-3"	5'-5"	5'-7"	5'-4"	5 5/8"
85.0	7'-8"	7'-2"	6'-5"	6'-0"	6'-2"	5'-4"	5'-6"	5'-2"	5 1/2"
90.0	7'-5"	6'-11"	6'-3"	5'-11"	6'-0"	5'-2"	5'-5"	5'-0"	5 1/2"
95.0	7'-2"	6'-8"	6'-1"	5'-9"	5'-10"	5'-0"	5'-4"	4'-8"	5 1/2"
100.0	7'-0"	6'-6"	6'-0"	5'-8"	5'-8"	4'-10"	5'-3"	4'-6"	5 1/4"
105.0	6'-10"	6'-4"	5'-11"	5'-6"	5'-6"	4'-8"	5'-2"	4'-3"	5 1/4"
110.0	6'-8"	6'-1"	5'-9"	5'-5"	5'-5"	4'-6"	5'-1"	4'-6"	5 1/4"
115.0	6'-6"	5'-11"	5'-8"	5'-4"	5'-4"	4'-4"	5'-0"	3'-9"	5 1/8"
120.0	6'-4"	5'-10"	5'-7"	5'-3"	5'-3"	4'-2"	4'-11"	3'-8"	5"
125.0	6'-3"	5'-8"	5'-5"	5'-2"	5'-2"	4'-0"	4'-10"	3'-8"	5"
130.0	6'-1"	5'-7"	5'-4"	5'-1"	5'-0"	3'-10"	4'-9"	3'-8"	5"
135.0	6'-0"	5'-5"	5'-3"	5'-0"	4'-11"	3'-8"	4'-8"	3'-7"	5"
140.0	5'-11"	5'-4"	5'-2"	4'-11"	4'-10"	3'-6"	4'-7"	3'-7"	5"

* NOTES:

1. ABOVE INDICATED MAX. SLAT SPANS MAY BE USED AS LONG AS ANCHOR SPACING SCHEDULES ON SHEET 14 INDICATE THAT AN ANCHOR SPACING IS AVAILABLE FOR THE CORRESPONDING SLAT SPAN AND DESIGN LOAD.
2. REQUIRES SIDE RAILS FASTENED TO EXISTING STRUCTURE WITH **3/8"ø HILTI KWIK HUS BOLT ANCHOR W/ 4" MIN. E.D. & 3 1/4" MIN. EMBEDMENT OR 5/16"ø ULTRACON ANCHOR W/ 2 1/2" MIN. E.D. & 2 1/4" MIN. EMBEDMENT** INTO GROUTED CONCRETE BLOCK OR WITH 1/4"ø HEX HD. HWH SELF-DRILL 410 S.S. SCREWS AT MULLIONS CONNECTION. VALID FOR WALL MOUNTED, TRAPPED MOUNTED, AND BUILD-OUT MOUNTED.
3. MAXIMUM SLAT SPANS FOR INTERMEDIATE LOADS MAY BE DETERMINED BY LINEAR INTERPOLATION BETWEEN END VALUES.
4. MIN. SEPARATION TO GLASS FOR WIND ZONES 1, 2 & 3 IS 1" AND AS SHOWN ON CHART Ic FOR WIND ZONE 4, PER ASTM E 1996.

TEXAS DEPARTMENT OF INSURANCE – 2006

STATE OF TEXAS
7/22/15
WALTER A. TILLIT, JR.
LICENSED PROFESSIONAL ENGINEER
P.E. SEAL/SIGNATURE/DATE

WALTER A. TILLIT Jr. P.E.
PROFESSIONAL ENGINEER

6355 N.W. 36th. St., Ste. 305
VIRGINIA GARDENS, Fl. 33166
Phone : (305) 871-1530 , Fax : (305) 871-1531

TEXAS LIC. # 90691
FIRM REGISTRATION # F-13790

58mm ER & NER SLAT BERTHA IMPACT PROTECTIVE ROLLING SYSTEM

AMERICAN SHUTTER SYSTEMS ASSOC., INC.
4268 WESTROADS DRIVE
WEST PALM BEACH, FL. 33407
PHONE: (877)999-2772 FAX: (561)209-8380

REV. No	DESCRIPTION	DATE	REV. No	DESCRIPTION	DATE
1	-	-	3	-	
2	-	-	4	-	

DRAWN BY: F.R.L.

07/15/15 DATE

15-248 DRAWING No

SHEET 12 OF 27

END RETENTION SYSTEM

MAX. ANCHOR'S SPACING SCHEDULE IIa

FOR A GIVEN PRODUCT MOUNTING TYPE, W/ 3/8"Ø WEDGE-BOLT ANCHORS TO POURED CONCRETE WALL, A.S.D. DESIGN LOAD & SLAT SPAN RANGE †

WALL MOUNT

A.S.D. DESIGN LOAD RANGE (p.s.f.)	SLAT SPAN RANGE							
	0'–4' †	> 4'–5' †	> 5'–6' †	> 6'–7' †	> 7'–9' †	> 9'–12' †	> 12'–16' †	> 16'–23' †
≤ 30.0	12"	12"	12"	12"	12"	12"	10"	6"
>30–40	12"	12"	12"	12"	12"	11 1/2"	7 1/2"	4 1/2"
>40–60	12"	12"	12"	12"	12"	7 1/2"	5"	4 1/2"
>60–80	12"	12"	12"	12"	9"	5 1/2"	4 1/2"	4 1/2"
>80–105	12"	12"	12"	11"	6 1/2"	5 1/2"	6"	–
>105–120	12"	12"	12"	9"	6"	5 1/2"	6"	–
>120–140	12"	12"	11"	7 1/2"	5 1/2"	5 1/2"	–	–

BUILD-OUT MOUNT

A.S.D. DESIGN LOAD RANGE (p.s.f.)	SLAT SPAN RANGE															
	0'–4' †		> 4'–5' †		> 5'–6' †		> 6'–7' †		> 7'–9' †		> 9'–12' †		> 12'–16' †		> 16'–20' †	
	D1	D2, D3	D1	D2, D3	D1	D2, D3	D1	D2, D3	D1	D2, D3	D1	D2, D3	D1	D2, D3	D1	D2, D3
≤ 30.0	5"	5"	5"	5"	5"	5"	5"	5"	5"	5"	5"	5"	5"	–	4 1/2"	–
>30–40	5"	5"	5"	5"	5"	5"	5"	5"	5"	5"	5"	5"	5"	–	4 1/2"	–
>40–60	5"	5"	5"	5"	5"	5"	5"	5"	5"	5"	5"	5"	4 1/2"	–	–	–
>60–80	5"	5"	5"	5"	5"	5"	5"	5"	5"	5"	5"	–	–	–	–	–
>80–105	5"	5"	5"	5"	5"	5"	5"	5"	5"	5"	5"	–	–	–	–	–
>105–120	5"	5"	5"	5"	5"	5"	5"	5"	5"	5"	5"	–	–	–	–	–
>120–140	5"	5"	5"	5"	5"	5"	5"	5"	5"	5"	5"	–	–	–	–	–

TRAPPED MOUNT

A.S.D. DESIGN LOAD RANGE (p.s.f.)	SLAT SPAN RANGE							
	0'–4' †	> 4'–5' †	> 5'–6' †	> 6'–7' †	> 7'–9' †	> 9'–12' †	> 12'–16' †	> 16'–23'
≤ 30.0	6"	6"	6"	6"	6"	6"	6"	6"
>30–40	6"	6"	6"	6"	6"	6"	6"	6"
>40–60	6"	6"	6"	6"	6"	6"	6"	5 1/2"
>60–80	6"	6"	6"	6"	6"	6"	5 1/2"	5 1/2"
>80–105	6"	6"	6"	6"	6"	5"	5"	–
>105–120	6"	6"	6"	6"	6"	5"	5"	–
>120–140	6"	6"	6"	6"	6"	5"	–	–

SLAT SPAN DEFINITION

† NOTE:
MAX. SLAT SPAN FOR A GIVEN DESIGN LOAD SHALL NEVER EXCEED MAX. SLAT SPAN INDICATED ON SLAT PERFORMANCE CHART ON SHEET 12.

MAX. ANCHOR'S SPACING SCHEDULE IIb

FOR A GIVEN PRODUCT MOUNTING TYPE, W/ 5/16"Ø ULTRACON ANCHORS TO POURED CONCRETE WALL, A.S.D. DESIGN LOAD & SLAT SPAN RANGE †

WALL MOUNT

A.S.D. DESIGN LOAD RANGE (p.s.f.)	SLAT SPAN RANGE							
	0'–4' †	> 4'–5' †	> 5'–6' †	> 6'–7' †	> 7'–9' †	> 9'–12' †	> 12'–16' †	> 16'–23' †
≤ 30.0	5"	5"	5"	5"	5"	5"	5"	5"
>30–40	5"	5"	5"	5"	5"	5"	5"	5"
>40–60	5"	5"	5"	5"	5"	5"	5"	5"
>60–80	5"	5"	5"	5"	5"	5"	5"	5"
>80–105	5"	5"	5"	5"	5"	5"	5"	5"
>105–120	5"	5"	5"	5"	5"	5"	5"	5"
>120–140	5"	5"	5"	5"	5"	5"	5"	5"

BUILD-OUT MOUNT

A.S.D. DESIGN LOAD RANGE (p.s.f.)	SLAT SPAN RANGE															
	0'–4' †		> 4'–5' †		> 5'–6' †		> 6'–7' †		> 7'–9' †		> 9'–12' †		> 12'–16' †		> 16'–20' †	
	D1	D2, D3	D1	D2, D3	D1	D2, D3	D1	D2, D3	D1	D2, D3	D1	D2, D3	D1	D2, D3	D1	D2, D3
≤ 30.0	3 1/2"	3 1/2"	3 1/2"	3 1/2"	3 1/2"	3 1/2"	3 1/2"	3 1/2"	3 1/2"	3 1/2"	3 1/2"	3 1/2"	–	–	–	–
>30–40	3 1/2"	3 1/2"	3 1/2"	3 1/2"	3 1/2"	3 1/2"	3 1/2"	3 1/2"	3 1/2"	3 1/2"	–	–	–	–	–	–
>40–60	3 1/2"	3 1/2"	3 1/2"	3 1/2"	3 1/2"	3 1/2"	3 1/2"	3 1/2"	3 1/2"	–	–	–	–	–	–	–
>60–80	3 1/2"	3 1/2"	3 1/2"	3 1/2"	3 1/2"	3 1/2"	3 1/2"	3 1/2"	–	–	–	–	–	–	–	–
>80–105	3 1/2"	3 1/2"	3 1/2"	3 1/2"	3 1/2"	3 1/2"	3 1/2"	–	–	–	–	–	–	–	–	–
>105–120	3 1/2"	3 1/2"	3 1/2"	3 1/2"	3 1/2"	3 1/2"	3 1/2"	–	–	–	–	–	–	–	–	–
>120–140	3 1/2"	3 1/2"	3 1/2"	3 1/2"	3 1/2"	3 1/2"	3 1/2"	–	–	–	–	–	–	–	–	–

TRAPPED MOUNT

A.S.D. DESIGN LOAD RANGE (p.s.f.)	SLAT SPAN RANGE							
	0'–4' †	> 4'–5' †	> 5'–6' †	> 6'–7' †	> 7'–9' †	> 9'–12' †	> 12'–16' †	> 16'–23'
≤ 30.0	5"	5"	5"	5"	5"	5"	5"	–
>30–40	5"	5"	5"	5"	5"	5"	5"	–
>40–60	5"	5"	5"	5"	5"	5"	–	–
>60–80	5"	5"	5"	5"	5"	5"	–	–
>80–105	5"	5"	5"	5"	5"	5"	–	–
>105–120	5"	5"	5"	5"	5"	5"	–	–
>120–140	5"	5"	5"	5"	5"	5"	–	–

TEXAS DEPARTMENT OF INSURANCE – 2006

STATE OF TEXAS
WALTER A. TILLIT JR.
90691
LICENSED PROFESSIONAL ENGINEER

7/22/15

P.E. SEAL/SIGNATURE/DATE

WALTER A. TILLIT Jr. P.E.
PROFESSIONAL ENGINEER

6355 N.W. 36th. St., Ste. 305
VIRGINIA GARDENS, Fl. 33166
Phone : (305) 871–1530 , Fax : (305) 871–1531

TEXAS LIC. # 90691
FIRM REGISTRATION # F–13790

58mm ER & NER SLAT BERTHA IMPACT PROTECTIVE ROLLING SYSTEM

AMERICAN SHUTTER SYSTEMS ASSOC., INC.
4268 WESTROADS DRIVE
WEST PALM BEACH, FL. 33407
PHONE: (877)999–2772 FAX: (561)209–8380

REV. No	DESCRIPTION	DATE	REV. No	DESCRIPTION	DATE
1	–	–	3	–	
2	–	–	4	–	

DRAWN BY: F.R.L.

07/15/15
DATE

15–248
DRAWING No

END RETENTION SYSTEM

MAX. ANCHOR'S SPACING SCHEDULE IIIa

FOR A GIVEN PRODUCT MOUNTING TYPE, W/ 3/8"Ø HILTI KWIK HUS BOLT ANCHORS TO GROUTED CONCRETE BLOCK WALL, A.S.D. DESIGN LOAD & SLAT SPAN RANGE

WALL MOUNT

A.S.D. DESIGN LOAD RANGE (p.s.f.)	SLAT SPAN RANGE							
	0'–4' †	> 4'–5' †	> 5'–6' †	> 6'–7' †	> 7'–9' †	> 9'–12' †	> 12'–16' †	> 16'–23' †
≤ 30.0	12"	12"	12"	12"	12"	8"	6"	–
>30–40	12"	12"	12"	12"	10 1/2"	6"	6"	–
>40–60	12"	12"	12"	12"	6 1/2"	6"	6"	–
>60–80	12"	12"	12"	8"	6"	6"	–	–
>80–105	12"	12"	8 1/2"	6"	6"	–	–	–
>105–120	12"	12"	7"	6"	–	–	–	–
>120–140	12"	11"	6"	6"	–	–	–	–

BUILD-OUT MOUNT

A.S.D. DESIGN LOAD RANGE (p.s.f.)	SLAT SPAN RANGE															
	0'–4' †		> 4'–5' †		> 5'–6' †		> 6'–7' †		> 7'–9' †		> 9'–12' †		> 12'–16' †		> 16'–20' †	
	D1	D2, D3	D1	D2, D3	D1	D2, D3	D1	D2, D3	D1	D2, D3	D1	D2, D3	D1	D2, D3	D1	D2, D3
≤ 30.0	6"	6"	6"	6"	6"	6"	6"	6"	6"	6"	6"	6"	–	–	–	–
>30–40	6"	6"	6"	6"	6"	6"	6"	6"	6"	6"	6"	6"	–	–	–	–
>40–60	6"	6"	6"	6"	6"	6"	6"	6"	6"	6"	6"	6"	–	–	–	–
>60–80	6"	6"	6"	6"	6"	6"	6"	6"	6"	–	–	–	–	–	–	–
>80–105	6"	6"	6"	6"	6"	6"	6"	6"	–	–	–	–	–	–	–	–
>105–120	6"	6"	6"	6"	6"	6"	–	–	–	–	–	–	–	–	–	–
>120–140	6"	6"	6"	6"	6"	6"	–	–	–	–	–	–	–	–	–	–

TRAPPED MOUNT

A.S.D. DESIGN LOAD RANGE (p.s.f.)	SLAT SPAN RANGE							
	0'–4' †	> 4'–5' †	> 5'–6' †	> 6'–7' †	> 7'–9' †	> 9'–12' †	> 12'–16' †	> 16'–23'
≤ 30.0	6"	6"	6"	6"	6"	6"	6"	–
>30–40	6"	6"	6"	6"	6"	6"	6"	–
>40–60	6"	6"	6"	6"	6"	6"	6"	–
>60–80	6"	6"	6"	6"	6"	6"	–	–
>80–105	6"	6"	6"	6"	6"	–	–	–
>105–120	6"	6"	6"	6"	–	–	–	–
>120–140	6"	6"	6"	–	–	–	–	–

SLAT SPAN DEFINITION

† NOTE:
MAX. SLAT SPAN FOR A GIVEN DESIGN LOAD SHALL NEVER EXCEED MAX. SLAT SPAN INDICATED ON SLAT PERFORMANCE CHART ON SHEET 12.

MAX. ANCHOR'S SPACING SCHEDULE IIIb

FOR A GIVEN PRODUCT MOUNTING TYPE, W/ 5/16"Ø ULTRACON ANCHORS TO GROUTED CONCRETE BLOCK WALL, A.S.D. DESIGN LOAD & SLAT SPAN RANGE †

WALL MOUNT

A.S.D. DESIGN LOAD RANGE (p.s.f.)	SLAT SPAN RANGE							
	0'–4' †	> 4'–5' †	> 5'–6' †	> 6'–7' †	> 7'–9' †	> 9'–12' †	> 12'–16' †	> 16'–23' †
≤ 30.0	5"	5"	5"	5"	5"	5"	–	–
>30–40	5"	5"	5"	5"	5"	5"	–	–
>40–60	5"	5"	5"	5"	5"	–	–	–
>60–80	5"	5"	5"	5"	–	–	–	–
>80–105	5"	5"	5"	–	–	–	–	–
>105–120	5"	5"	5"	–	–	–	–	–
>120–140	5"	5"	5"	–	–	–	–	–

BUILD-OUT MOUNT

A.S.D. DESIGN LOAD RANGE (p.s.f.)	SLAT SPAN RANGE															
	0'–4' †		> 4'–5' †		> 5'–6' †		> 6'–7' †		> 7'–9' †		> 9'–12' †		> 12'–16' †		> 16'–20' †	
	D1	D2, D3	D1	D2, D3	D1	D2, D3	D1	D2, D3	D1	D2, D3	D1	D2, D3	D1	D2, D3	D1	D2, D3
≤ 30.0	3 1/2"	3 1/2"	3 1/2"	3 1/2"	3 1/2"	3 1/2"	3 1/2"	3 1/2"	3 1/2"	3 1/2"	–	–	–	–	–	–
>30–40	3 1/2"	3 1/2"	3 1/2"	3 1/2"	3 1/2"	3 1/2"	3 1/2"	3 1/2"	–	–	–	–	–	–	–	–
>40–60	3 1/2"	3 1/2"	3 1/2"	3 1/2"	3 1/2"	3 1/2"	–	–	–	–	–	–	–	–	–	–
>60–80	3 1/2"	3 1/2"	3 1/2"	3 1/2"	3 1/2"	–	–	–	–	–	–	–	–	–	–	–
>80–105	3 1/2"	3 1/2"	3 1/2"	3 1/2"	3 1/2"	–	–	–	–	–	–	–	–	–	–	–
>105–120	3 1/2"	3 1/2"	3 1/2"	3 1/2"	3 1/2"	–	–	–	–	–	–	–	–	–	–	–
>120–140	3 1/2"	3 1/2"	3 1/2"	3 1/2"	3 1/2"	–	–	–	–	–	–	–	–	–	–	–

TRAPPED MOUNT

A.S.D. DESIGN LOAD RANGE (p.s.f.)	SLAT SPAN RANGE							
	0'–4' †	> 4'–5' †	> 5'–6' †	> 6'–7' †	> 7'–9' †	> 9'–12' †	> 12'–16' †	> 16'–23'
≤ 30.0	5"	5"	5"	5"	5"	–	–	–
>30–40	5"	5"	5"	5"	5"	–	–	–
>40–60	5"	5"	5"	–	–	–	–	–
>60–80	5"	5"	5"	–	–	–	–	–
>80–105	5"	5"	5"	–	–	–	–	–
>105–120	5"	5"	5"	–	–	–	–	–
>120–140	5"	5"	5"	–	–	–	–	–

TEXAS DEPARTMENT OF INSURANCE – 2006

7/22/15

P.E. SEAL/SIGNATURE/DATE

WALTER A. TILLIT Jr. P.E.
PROFESSIONAL ENGINEER

6355 N.W. 36th. St., Ste. 305
VIRGINIA GARDENS, Fl. 33166
Phone : (305) 871–1530 , Fax : (305) 871–1531

TEXAS LIC. # 90691
FIRM REGISTRATION # F–13790

58mm ER & NER SLAT BERTHA IMPACT PROTECTIVE ROLLING SYSTEM

AMERICAN SHUTTER SYSTEMS ASSOC., INC.
4268 WESTROADS DRIVE
WEST PALM BEACH, FL. 33407
PHONE: (877)999–2772 FAX: (561)209–8380

REV. No	DESCRIPTION	DATE	REV. No	DESCRIPTION	DATE
1	–	–	3	–	
2	–	–	4	–	

DRAWN BY: F.R.L.

07/15/15
DATE

15–248
DRAWING No

SHEET 14 OF 27

SCHEDULE 1a
FLOOR TO CEILING (TRAPPED) MOUNTING

MAX. SPAN (ft) FOR END AND INTERIOR MULLIONS FOR A GIVEN A.S.D. DESIGN LOAD (psf), AND A MAX. MULLION SPACING (ft) *

A.S.D. DESIGN LOAD (p.s.f.)	MAXIMUM MULLION SPACING (ft)*	MAXIMUM MULLION SPAN (ft)							
		Ⓜ 4"x6"x1/4" MULLION				Ⓝ 4"x8"x1/4" MULLION			
		ORIENTATION #1 (▭)		ORIENTATION #2 (▯)		ORIENTATION #1 (▭)		ORIENTATION #2 (▯)	
		END	INTERIOR	END	INTERIOR	END	INTERIOR	END	INTERIOR
30	22'-10"	6' - 6"	9' - 4"	5' - 11"	11' - 6"	7' - 8"	9' - 7"	6' - 9"	12' - 0"
35	22'-10"	6' - 0"	8' - 10"	5' - 6"	10' - 11"	7' - 2"	8' - 11"	6' - 4"	12' - 0"
40	22'-10"	5' - 8"	8' - 5"	5' - 2"	10' - 5"	6' - 5"	8' - 0"	5' - 11"	12' - 0"
45	21'-0"	5' - 8"	8' - 4"	5' - 2"	10' - 4"	6' - 4"	8' - 1"	5' - 11"	12' - 0"
50	20'-0"	5' - 6"	8' - 2"	5' - 1"	9' - 10"	6' - 1"	7' - 10"	5' - 10"	12' - 0"
55	19'-0"	5' - 6"	8' - 1"	5' - 0"	9' - 5"	5' - 11"	7' - 9"	5' - 9"	12' - 0"
60	17'-9"	5' - 6"	8' - 0"	5' - 1"	9' - 3"	5' - 11"	7' - 10"	5' - 9"	12' - 0"
65	16'-10"	5' - 6"	7' - 11"	5' - 0"	9' - 0"	5' - 11"	7' - 7"	5' - 8"	12' - 0"
70	16'-0"	5' - 5"	7' - 11"	5' - 0"	8' - 7"	5' - 10"	7' - 5"	5' - 7"	12' - 0"
75	15'-0"	5' - 6"	7' - 10"	5' - 1"	8' - 7"	5' - 11"	7' - 5"	5' - 8"	12' - 0"
80	14'-6"	5' - 5"	7' - 10"	5' - 0"	8' - 6"	5' - 9"	7' - 2"	5' - 7"	12' - 0"
85	13'-6"	5' - 6"	7' - 10"	5' - 1"	8' - 7"	6' - 0"	7' - 4"	5' - 9"	12' - 0"
90	12'-6"	5' - 8"	7' - 10"	5' - 3"	8' - 9"	6' - 2"	7' - 7"	6' - 0"	12' - 0"
95	11'-6"	5' - 10"	7' - 11"	5' - 5"	9' - 0"	6' - 7"	8' - 0"	6' - 2"	12' - 0"
100	10'-6"	6' - 0"	8' - 1"	5' - 7"	9' - 4"	7' - 0"	8' - 6"	6' - 5"	12' - 0"
105	9'-6"	6' - 4"	8' - 2"	5' - 11"	9' - 10"	7' - 6"	8' - 6"	6' - 9"	12' - 0"
110	9'-5"	6' - 2"	8' - 1"	5' - 10"	9' - 6"	7' - 5"	8' - 6"	6' - 8"	12' - 0"
115	9'-4"	6' - 0"	8' - 0"	5' - 9"	9' - 2"	7' - 2"	8' - 3"	6' - 7"	12' - 0"
120	9'-3"	6' - 0"	7' - 11"	5' - 8"	8' - 10"	6' - 11"	7' - 10"	6' - 6"	12' - 0"
125	9'-0"	6' - 0"	7' - 10"	5' - 8"	8' - 9"	6' - 11"	7' - 8"	6' - 6"	12' - 0"
130	8'-10"	6' - 0"	7' - 10"	5' - 7"	8' - 7"	6' - 10"	7' - 6"	6' - 5"	12' - 0"
135	8'-9"	6' - 0"	7' - 9"	5' - 6"	8' - 4"	6' - 8"	7' - 2"	6' - 4"	11' - 10"
140	8'-6"	6' - 0"	7' - 9"	5' - 7"	8' - 3"	6' - 8"	7' - 1"	6' - 4"	11' - 10"

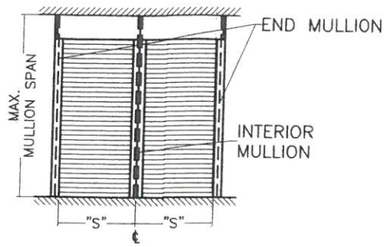

MULLION SPACING: "S"

SCHEDULE 2a
WALL MOUNTING

MAX. SPAN (ft) FOR END AND INTERIOR MULLIONS FOR A GIVEN A.S.D. DESIGN LOAD (psf), AND A MAX. MULLION SPACING (ft) *

A.S.D. DESIGN LOAD (p.s.f.)	MAXIMUM MULLION SPACING (ft)*	MAXIMUM MULLION SPAN (ft)							
		Ⓜ 4"x6"x1/4" MULLION				Ⓝ 4"x8"x1/4" MULLION			
		ORIENTATION #1 (▭)		ORIENTATION #2 (▯)		ORIENTATION #1 (▭)		ORIENTATION #2 (▯)	
		END	INTERIOR	END	INTERIOR	END	INTERIOR	END	INTERIOR
30	22'-10"	6' - 5"	9' - 3"	5' - 11"	11' - 6"	7' - 8"	9' - 7"	5' - 7"	12' - 0"
35	22'-10"	6' - 0"	8' - 10"	5' - 6"	10' - 11"	7' - 2"	8' - 11"	4' - 10"	12' - 0"
40	22'-10"	5' - 8"	8' - 5"	5' - 2"	10' - 5"	6' - 9"	8' - 5"	4' - 4"	12' - 0"
45	21'-0"	5' - 8"	8' - 4"	5' - 2"	10' - 4"	6' - 9"	8' - 8"	4' - 3"	12' - 0"
50	20'-0"	5' - 6"	8' - 2"	5' - 1"	10' - 2"	6' - 7"	8' - 8"	4' - 2"	12' - 0"
55	19'-0"	5' - 6"	8' - 1"	5' - 0"	10' - 0"	6' - 6"	8' - 8"	4' - 1"	12' - 0"
60	17'-9"	5' - 6"	8' - 0"	5' - 1"	9' - 11"	6' - 6"	8' - 7"	4' - 1"	12' - 0"
65	16'-10"	5' - 6"	7' - 11"	5' - 0"	9' - 10"	6' - 5"	8' - 6"	4' - 1"	12' - 0"
70	16'-0"	5' - 6"	7' - 10"	5' - 0"	9' - 9"	6' - 6"	8' - 5"	4' - 0"	12' - 0"
75	15'-0"	5' - 6"	7' - 10"	5' - 1"	9' - 9"	6' - 6"	8' - 5"	4' - 1"	12' - 0"
80	14'-6"	5' - 6"	7' - 9"	5' - 0"	9' - 8"	6' - 6"	8' - 4"	4' - 1"	12' - 0"
85	13'-6"	5' - 6"	7' - 10"	5' - 1"	9' - 8"	6' - 7"	8' - 4"	4' - 2"	12' - 0"
90	12'-6"	5' - 7"	7' - 10"	5' - 3"	9' - 9"	6' - 9"	8' - 5"	4' - 5"	12' - 0"
95	11'-6"	5' - 10"	7' - 11"	5' - 5"	9' - 10"	6' - 11"	8' - 5"	4' - 8"	12' - 0"
100	10'-6"	6' - 0"	8' - 0"	5' - 7"	10' - 0"	7' - 2"	8' - 6"	5' - 1"	12' - 0"
105	9'-6"	6' - 4"	8' - 2"	5' - 11"	10' - 2"	7' - 6"	8' - 6"	6' - 9"	12' - 0"
110	9'-5"	6' - 3"	8' - 1"	5' - 10"	10' - 0"	7' - 5"	8' - 6"	5' - 6"	12' - 0"
115	9'-4"	6' - 2"	8' - 0"	5' - 9"	9' - 11"	7' - 3"	8' - 5"	5' - 4"	12' - 0"
120	9'-3"	6' - 0"	7' - 11"	5' - 8"	9' - 10"	7' - 2"	8' - 5"	5' - 2"	12' - 0"
125	9'-0"	6' - 0"	7' - 10"	5' - 8"	9' - 9"	7' - 2"	8' - 5"	5' - 2"	12' - 0"
130	8'-10"	6' - 0"	7' - 10"	5' - 7"	9' - 8"	7' - 1"	8' - 4"	5' - 1"	12' - 0"
135	8'-9"	6' - 0"	7' - 9"	5' - 6"	9' - 7"	7' - 0"	8' - 4"	5' - 0"	11' - 10"
140	8'-6"	6' - 0"	7' - 9"	5' - 7"	9' - 7"	7' - 1"	8' - 4"	5' - 0"	11' - 10"

SCHEDULE 1c
FLOOR TO CEILING (TRAPPED) MOUNTING

MAX. SPAN (ft) FOR END AND INTERIOR MULLIONS FOR A GIVEN DESIGN LOAD (psf), AND A 7'-0" MAX. MULLION SPACING (ft) *

A.S.D. DESIGN LOAD (p.s.f.)	MAXIMUM MULLION SPACING (ft)*	MAXIMUM MULLION SPAN (ft)							
		Ⓜ 4"x6"x1/4" MULLION				Ⓝ 4"x8"x1/4" MULLION			
		ORIENTATION #1 (▭)		ORIENTATION #2 (▯)		ORIENTATION #1 (▭)		ORIENTATION #2 (▯)	
		END	INTERIOR	END	INTERIOR	END	INTERIOR	END	INTERIOR
30.0	7'-0"	12' - 0"	12' - 0"	12' - 0"	12' - 0"	12' - 0"	12' - 0"	12' - 0"	12' - 0"
35.0	7'-0"	12' - 0"	12' - 0"	12' - 0"	12' - 0"	12' - 0"	12' - 0"	12' - 0"	12' - 0"
40.0	7'-0"	12' - 0"	12' - 0"	12' - 0"	12' - 0"	12' - 0"	12' - 0"	12' - 0"	12' - 0"
45.0	7'-0"	12' - 0"	12' - 0"	12' - 0"	12' - 0"	12' - 0"	12' - 0"	12' - 0"	12' - 0"
50.0	7'-0"	12' - 0"	11' - 7"	11' - 8"	12' - 0"	12' - 0"	12' - 0"	12' - 0"	12' - 0"
55.0	7'-0"	12' - 0"	11' - 3"	10' - 11"	12' - 0"	12' - 0"	12' - 0"	11' - 11"	12' - 0"
60.0	7'-0"	12' - 0"	10' - 11"	10' - 4"	12' - 0"	12' - 0"	11' - 11"	11' - 3"	12' - 0"
65.0	7'-0"	11' - 4"	10' - 8"	9' - 11"	12' - 0"	12' - 0"	11' - 7"	10' - 9"	12' - 0"
70.0	7'-0"	10' - 9"	10' - 5"	9' - 6"	12' - 0"	12' - 0"	11' - 3"	10' - 4"	12' - 0"
75.0	7'-0"	10' - 3"	10' - 2"	9' - 2"	12' - 0"	12' - 0"	11' - 0"	9' - 11"	12' - 0"
80.0	7'-0"	9' - 10"	9' - 11"	8' - 10"	12' - 0"	11' - 6"	10' - 10"	9' - 8"	12' - 0"
85.0	7'-0"	9' - 5"	9' - 9"	8' - 7"	12' - 0"	11' - 1"	10' - 7"	9' - 4"	12' - 0"
90.0	7'-0"	9' - 1"	9' - 7"	8' - 5"	11' - 10"	10' - 8"	10' - 5"	9' - 1"	12' - 0"
95.0	7'-0"	8' - 9"	9' - 5"	8' - 2"	11' - 7"	10' - 4"	10' - 2"	8' - 11"	12' - 0"
100.0	7'-0"	8' - 6"	9' - 3"	8' - 0"	11' - 5"	10' - 0"	10' - 0"	8' - 8"	12' - 0"
105.0	7'-0"	8' - 3"	9' - 1"	7' - 9"	11' - 3"	9' - 9"	9' - 10"	8' - 6"	12' - 0"
110.0	7'-0"	8' - 0"	8' - 11"	7' - 7"	11' - 1"	9' - 6"	9' - 9"	8' - 4"	12' - 0"
115.0	7'-0"	7' - 10"	8' - 10"	7' - 4"	10' - 11"	9' - 3"	9' - 7"	8' - 2"	12' - 0"
120.0	7'-0"	7' - 8"	8' - 8"	7' - 2"	10' - 9"	9' - 0"	9' - 5"	8' - 1"	12' - 0"
125.0	7'-0"	7' - 5"	8' - 7"	7' - 0"	10' - 7"	8' - 10"	9' - 4"	7' - 11"	12' - 0"
130.0	7'-0"	7' - 3"	8' - 5"	6' - 10"	10' - 6"	8' - 7"	9' - 2"	7' - 10"	12' - 0"
135.0	7'-0"	7' - 2"	8' - 4"	6' - 8"	10' - 4"	8' - 5"	9' - 1"	7' - 8"	12' - 0"
140.0	7'-0"	7' - 0"	8' - 3"	6' - 7"	10' - 1"	8' - 3"	9' - 0"	7' - 7"	12' - 0"

SCHEDULE 2c
WALL MOUNTING

MAX. SPAN (ft) FOR END AND INTERIOR MULLIONS FOR A GIVEN DESIGN LOAD (psf), AND A 7'-0" MAX. MULLION SPACING (ft) *

A.S.D. DESIGN LOAD (p.s.f.)	MAXIMUM MULLION SPACING (ft)*	MAXIMUM MULLION SPAN (ft)							
		Ⓜ 4"x6"x1/4" MULLION				Ⓝ 4"x8"x1/4" MULLION			
		ORIENTATION #1 (▭)		ORIENTATION #2 (▯)		ORIENTATION #1 (▭)		ORIENTATION #2 (▯)	
		END	INTERIOR	END	INTERIOR	END	INTERIOR	END	INTERIOR
30.0	7'-0"	12' - 0"	12' - 0"	12' - 0"	12' - 0"	12' - 0"	12' - 0"	12' - 0"	12' - 0"
35.0	7'-0"	12' - 0"	12' - 0"	12' - 0"	12' - 0"	12' - 0"	12' - 0"	12' - 0"	12' - 0"
40.0	7'-0"	12' - 0"	12' - 0"	12' - 0"	12' - 0"	12' - 0"	12' - 0"	12' - 0"	12' - 0"
45.0	7'-0"	12' - 0"	12' - 0"	12' - 0"	12' - 0"	12' - 0"	12' - 0"	12' - 0"	12' - 0"
50.0	7'-0"	12' - 0"	11' - 7"	11' - 8"	12' - 0"	12' - 0"	12' - 0"	12' - 0"	12' - 0"
55.0	7'-0"	12' - 0"	11' - 3"	10' - 11"	12' - 0"	12' - 0"	12' - 0"	11' - 11"	12' - 0"
60.0	7'-0"	12' - 0"	10' - 11"	10' - 4"	12' - 0"	12' - 0"	11' - 11"	11' - 3"	12' - 0"
65.0	7'-0"	11' - 4"	10' - 8"	9' - 11"	12' - 0"	12' - 0"	11' - 7"	10' - 9"	12' - 0"
70.0	7'-0"	10' - 9"	10' - 5"	9' - 6"	12' - 0"	12' - 0"	11' - 3"	10' - 4"	12' - 0"
75.0	7'-0"	10' - 3"	10' - 2"	9' - 2"	12' - 0"	12' - 0"	11' - 0"	9' - 11"	12' - 0"
80.0	7'-0"	9' - 10"	9' - 11"	8' - 10"	12' - 0"	11' - 6"	10' - 10"	9' - 8"	12' - 0"
85.0	7'-0"	9' - 5"	9' - 9"	8' - 7"	12' - 0"	11' - 1"	10' - 7"	9' - 4"	12' - 0"
90.0	7'-0"	9' - 1"	9' - 7"	8' - 5"	11' - 10"	10' - 8"	10' - 5"	9' - 1"	12' - 0"
95.0	7'-0"	8' - 9"	9' - 5"	8' - 2"	11' - 7"	10' - 4"	10' - 2"	8' - 11"	12' - 0"
100.0	7'-0"	8' - 6"	9' - 3"	8' - 0"	11' - 5"	10' - 0"	10' - 0"	8' - 8"	12' - 0"
105.0	7'-0"	8' - 3"	9' - 1"	7' - 9"	11' - 3"	9' - 9"	9' - 10"	8' - 6"	12' - 0"
110.0	7'-0"	8' - 0"	8' - 11"	7' - 7"	11' - 1"	9' - 6"	9' - 9"	8' - 4"	12' - 0"
115.0	7'-0"	7' - 10"	8' - 10"	7' - 4"	10' - 11"	9' - 3"	9' - 7"	8' - 2"	12' - 0"
120.0	7'-0"	7' - 8"	8' - 8"	7' - 2"	10' - 9"	9' - 0"	9' - 5"	8' - 1"	12' - 0"
125.0	7'-0"	7' - 5"	8' - 7"	7' - 0"	10' - 7"	8' - 10"	9' - 4"	7' - 11"	12' - 0"
130.0	7'-0"	7' - 3"	8' - 5"	6' - 10"	10' - 6"	8' - 7"	9' - 2"	7' - 10"	12' - 0"
135.0	7'-0"	7' - 2"	8' - 4"	6' - 8"	10' - 4"	8' - 5"	9' - 1"	7' - 8"	12' - 0"
140.0	7'-0"	7' - 0"	8' - 3"	6' - 7"	10' - 3"	8' - 3"	9' - 0"	7' - 7"	12' - 0"

* MAXIMUM MULLION SPACING SHALL BE SUCH THAT MAX. ALLOWABLE SLAT SPAN FOR THAT DESIGN LOAD SHALL NOT BE EXCEEDED.
† MULLION ORIENTATION IS AS SEEN FROM THE OUTSIDE (EXTERIOR) OF PRODUCT.

TEXAS DEPARTMENT OF INSURANCE – 2006

MULLION SCHEDULE FOR END RETENTION SYSTEM

7/22/15

P.E. SEAL/SIGNATURE/DATE

WALTER A. TILLIT Jr. P.E.
PROFESSIONAL ENGINEER

6355 N.W. 36th. St., Ste. 305
VIRGINIA GARDENS, Fl. 33166
Phone : (305) 871-1530 , Fax : (305) 871-1531

TEXAS LIC. # 90691
FIRM REGISTRATION # F-13790

58mm ER & NER SLAT BERTHA IMPACT PROTECTIVE ROLLING SYSTEM

AMERICAN SHUTTER SYSTEMS ASSOC., INC.
4268 WESTROADS DRIVE
WEST PALM BEACH, FL. 33407
PHONE: (877)999-2772 FAX: (561)209-8380

REV. No	DESCRIPTION	DATE	REV. No	DESCRIPTION	DATE
1	–	–	3	–	
2	–	–	4	–	

DRAWN BY: F.R.L.

07/15/15 DATE

15-248 DRAWING No

MULLION SCHEDULE FOR END RETENTION SYSTEM

SCHEDULE 1b
FLOOR TO CEILING (TRAPPED) MOUNTING

MAX. SPAN (ft) FOR END AND INTERIOR MULLIONS FOR A GIVEN DESIGN LOAD (psf), AND A 12'-0" MAX. MULLION SPACING (ft) *

A.S.D. DESIGN LOAD (p.s.f.)	MAXIMUM MULLION SPACING (ft)*	MAXIMUM MULLION SPAN (ft)							
		Ⓜ 4"x6"x1/4" MULLION				Ⓝ 4"x8"x1/4" MULLION			
		ORIENTATION #1 (▭)		ORIENTATION #2 (▯)		ORIENTATION #1 (▭)		ORIENTATION #2 (▯)	
		END	INTERIOR	END	INTERIOR	END	INTERIOR	END	INTERIOR
30.0	12'-0"	10' - 1"	11' - 6"	8' - 8"	12' - 0"	12' - 0"	12' - 0"	9' - 5"	12' - 0"
35.0	12'-0"	9' - 4"	10' - 11"	8' - 2"	12' - 0"	11' - 1"	11' - 11"	8' - 11"	12' - 0"
40.0	12'-0"	8' - 8"	10' - 5"	7' - 10"	12' - 0"	10' - 4"	11' - 4"	8' - 6"	12' - 0"
45.0	12'-0"	8' - 2"	10' - 1"	7' - 6"	12' - 0"	9' - 9"	10' - 11"	8' - 2"	12' - 0"
50.0	12'-0"	7' - 9"	9' - 8"	7' - 2"	12' - 0"	9' - 2"	10' - 7"	7' - 11"	12' - 0"
55.0	12'-0"	7' - 5"	9' - 5"	6' - 10"	11' - 8"	8' - 9"	10' - 3"	7' - 8"	12' - 0"
60.0	12'-0"	7' - 1"	9' - 2"	6' - 7"	11' - 4"	8' - 5"	9' - 11"	7' - 5"	12' - 0"
65.0	12'-0"	6' - 10"	8' - 11"	6' - 4"	11' - 0"	8' - 1"	9' - 8"	7' - 3"	12' - 0"
70.0	12'-0"	6' - 7"	8' - 8"	6' - 1"	10' - 9"	7' - 10"	9' - 5"	7' - 0"	12' - 0"
75.0	12'-0"	6' - 4"	8' - 6"	5' - 11"	10' - 6"	7' - 6"	9' - 3"	6' - 9"	12' - 0"
80.0	12'-0"	6' - 2"	8' - 4"	5' - 8"	10' - 3"	7' - 4"	9' - 0"	6' - 6"	12' - 0"
85.0	12'-0"	6' - 0"	8' - 2"	5' - 6"	9' - 9"	6' - 11"	8' - 10"	6' - 4"	12' - 0"
90.0	12'-0"	5' - 10"	8' - 0"	5' - 5"	9' - 2"	6' - 6"	8' - 8"	6' - 2"	12' - 0"
95.0	12'-0"	5' - 8"	7' - 10"	5' - 3"	8' - 8"	6' - 2"	8' - 6"	6' - 0"	12' - 0"
100.0	12'-0"	5' - 6"	7' - 8"	5' - 2"	8' - 3"	5' - 11"	8' - 3"	5' - 11"	11' - 9"
105.0	12'-0"	5' - 5"	7' - 7"	5' - 0"	7' - 10"	5' - 8"	7' - 10"	5' - 8"	11' - 6"
110.0	12'-0"	5' - 3"	7' - 6"	4' - 11"	7' - 6"	5' - 3"	7' - 6"	5' - 5"	11' - 3"

SCHEDULE 2b
WALL MOUNTING

MAX. SPAN (ft) FOR END AND INTERIOR MULLIONS FOR A GIVEN DESIGN LOAD (psf), AND A 12'-0" MAX. MULLION SPACING (ft) *

A.S.D. DESIGN LOAD (p.s.f.)	MAXIMUM MULLION SPACING (ft)*	MAXIMUM MULLION SPAN (ft)							
		Ⓜ 4"x6"x1/4" MULLION				Ⓝ 4"x8"x1/4" MULLION			
		ORIENTATION #1 (▭)		ORIENTATION #2 (▯)		ORIENTATION #1 (▭)		ORIENTATION #2 (▯)	
		END	INTERIOR	END	INTERIOR	END	INTERIOR	END	INTERIOR
30.0	12'-0"	8' - 8"	11' - 6"	8' - 8"	12' - 0"	12' - 0"	12' - 0"	9' - 5"	12' - 0"
35.0	12'-0"	8' - 2"	10' - 11"	8' - 2"	12' - 0"	11' - 1"	11' - 11"	8' - 11"	12' - 0"
40.0	12'-0"	7' - 10"	10' - 5"	7' - 10"	12' - 0"	10' - 4"	11' - 4"	8' - 6"	12' - 0"
45.0	12'-0"	7' - 6"	10' - 1"	7' - 6"	12' - 0"	9' - 9"	10' - 11"	8' - 2"	12' - 0"
50.0	12'-0"	7' - 2"	9' - 8"	7' - 2"	12' - 0"	9' - 2"	10' - 7"	7' - 11"	12' - 0"
55.0	12'-0"	6' - 10"	9' - 5"	6' - 10"	11' - 8"	8' - 9"	10' - 3"	7' - 8"	12' - 0"
60.0	12'-0"	6' - 7"	9' - 2"	6' - 7"	11' - 4"	8' - 5"	9' - 11"	7' - 5"	12' - 0"
65.0	12'-0"	6' - 4"	8' - 11"	6' - 4"	11' - 0"	8' - 1"	9' - 8"	7' - 3"	12' - 0"
70.0	12'-0"	6' - 1"	8' - 8"	6' - 1"	10' - 9"	7' - 10"	9' - 5"	7' - 0"	12' - 0"
75.0	12'-0"	5' - 11"	8' - 6"	5' - 11"	10' - 6"	7' - 6"	9' - 3"	5' - 7"	12' - 0"
80.0	12'-0"	5' - 8"	8' - 4"	5' - 8"	10' - 3"	7' - 4"	9' - 0"	5' - 3"	12' - 0"
85.0	12'-0"	5' - 6"	8' - 2"	5' - 6"	10' - 1"	7' - 1"	8' - 10"	4' - 11"	12' - 0"
90.0	12'-0"	5' - 5"	8' - 0"	5' - 5"	9' - 11"	6' - 11"	8' - 8"	4' - 8"	12' - 0"
95.0	12'-0"	5' - 3"	7' - 10"	5' - 3"	9' - 8"	6' - 9"	8' - 6"	4' - 5"	12' - 0"
100.0	12'-0"	5' - 2"	7' - 8"	5' - 2"	9' - 7"	6' - 7"	8' - 5"	4' - 3"	11' - 9"
105.0	12'-0"	5' - 0"	7' - 7"	5' - 0"	9' - 4"	6' - 5"	8' - 3"	4' - 0"	11' - 6"
110.0	12'-0"	4' - 11"	7' - 6"	4' - 11"	9' - 1"	6' - 3"	8' - 1"	3' - 10"	11' - 3"

SCHEDULE 1b' (LIMITED LOAD, MULLION SPACING & SPAN INSTALLATION)
FLOOR TO CEILING (TRAPPED) MOUNTING

MAX. SPAN (ft) FOR END AND INTERIOR MULLIONS FOR A GIVEN DESIGN LOAD (psf), AND FOR 12'-0" (CASE I) & 8'-0" (CASES Ia & II) MAX. MULLION SPACING (ft) *

INSTALLATION CASES	A.S.D. DESIGN LOAD (p.s.f.)	MAXIMUM MULLION SPACING (ft)*	MAXIMUM MULLION SPAN (ft)				
			Ⓜ 4"x6"x1/4" MULLION		Ⓝ 4"x8"x1/4" MULLION		
			ORIENTATION #1 (▭)	ORIENTATION # 2 (▯)	ORIENTATION #1 (▭)	ORIENTATION #1 (▭)	ORIENTATION # 2 (▯)
			END	INTERIOR	END	INTERIOR	INTERIOR
CASE I	30.0	12'-0"	-	12' - 0"	12' - 0"	12' - 0"	12' - 0"
	35.0	12'-0"	-	12' - 0"	11' - 1"	11' - 11"	12' - 0"
	40.0	12'-0"	-	12' - 0"	10' - 4"	11' - 4"	12' - 0"
	45.0	12'-0"	-	12' - 0"	9' - 9"	10' - 11"	12' - 0"
	50.0	12'-0"	-	12' - 0"	8' - 11"	10' - 7"	12' - 0"
	55.0	12'-0"	-	11' - 8"	8' - 2"	10' - 3"	12' - 0"
	60.0	12'-0"	-	11' - 4"	7' - 6"	9' - 11"	12' - 0"
	60.8	12'-0"	-	11' - 3"	7' - 4"	9' - 11"	12' - 0"
CASE Ia	30.0	8'-0"	-	12' - 0"	12' - 0"	12' - 0"	12' - 0"
	35.0	8'-0"	-	12' - 0"	12' - 0"	12' - 0"	12' - 0"
	40.0	8'-0"	-	12' - 0"	12' - 0"	12' - 0"	12' - 0"
	45.0	8'-0"	-	12' - 0"	12' - 0"	12' - 0"	12' - 0"
	50.0	8'-0"	-	12' - 0"	12' - 0"	12' - 0"	12' - 0"
	55.0	8'-0"	-	12' - 0"	12' - 0"	11' - 8"	12' - 0"
	60.0	8'-0"	-	12' - 0"	11' - 10"	11' - 4"	12' - 0"
	60.8	8'-0"	-	12' - 0"	11' - 9"	11' - 4"	12' - 0"
CASE II	30.0	8'-0"	-	9' - 0"	9' - 0"	9' - 0"	9' - 0"
	35.0	8'-0"	-	9' - 0"	9' - 0"	9' - 0"	9' - 0"
	40.0	8'-0"	-	9' - 0"	9' - 0"	9' - 0"	9' - 0"
	45.0	8'-0"	-	9' - 0"	9' - 0"	9' - 0"	9' - 0"
	50.0	8'-0"	-	9' - 0"	9' - 0"	9' - 0"	9' - 0"
	55.0	8'-0"	-	9' - 0"	9' - 0"	9' - 0"	9' - 0"
	60.0	8'-0"	-	9' - 0"	9' - 0"	9' - 0"	9' - 0"
	65.0	8'-0"	-	9' - 0"	9' - 0"	9' - 0"	9' - 0"
	70.0	8'-0"	-	9' - 0"	9' - 0"	9' - 0"	9' - 0"
	75.0	8'-0"	-	9' - 0"	9' - 0"	9' - 0"	9' - 0"
	80.0	8'-0"	-	9' - 0"	9' - 0"	9' - 0"	9' - 0"
	85.0	8'-0"	-	9' - 0"	8' - 6" Δ	8' - 6" Δ	9' - 0"
	90.0	8'-0"	-	9' - 0"	8' - 0" Δ	8' - 0" Δ	9' - 0"
	95.0	8'-0"	-	9' - 0"	7' - 7" Δ	7' - 7" Δ	9' - 0"
	100.0	8'-0"	-	9' - 0"	7' - 2" Δ	7' - 3" Δ	9' - 0"

Δ NOTE: USE 9'-0" SPAN IF ANCHOR CONSISTS OF HILTI, INC KWIK HUS-H SCREW, POWER FASTENERS OR WEDGE-BOLT ANCHOR IN LIEU OF HILTI KWIK BOLT TZ, SEE SCHEDULES 1 & 2 ON SHEET 8.

SCHEDULE 2b' (LIMITED LOAD, MULLION SPACING & SPAN INSTALLATION)
WALL MOUNTED

MAX. SPAN (ft) FOR END AND INTERIOR MULLIONS FOR A GIVEN DESIGN LOAD (psf), AND FOR 12'-0" (CASE I') & 8'-0" (CASE II') MAX. MULLION SPACING (ft) *

INSTALLATION CASES	A.S.D. DESIGN LOAD (p.s.f.)	MAXIMUM MULLION SPACING (ft)*	MAXIMUM MULLION SPAN (ft)				
			Ⓜ 4"x6"x1/4" MULLION		Ⓝ 4"x8"x1/4" MULLION		
			ORIENTATION #1 (▭)	ORIENTATION # 2 (▯)	ORIENTATION #1 (▭)	ORIENTATION #1 (▭)	ORIENTATION # 2 (▯)
			END	INTERIOR	END	INTERIOR	INTERIOR
CASE I'	30.0	12'-0"	-	12' - 0"	12' - 0"	12' - 0"	12' - 0"
	35.0	12'-0"	-	12' - 0"	11' - 1"	11' - 11"	12' - 0"
	40.0	12'-0"	-	12' - 0"	10' - 4"	11' - 4"	12' - 0"
	45.0	12'-0"	-	12' - 0"	9' - 9"	10' - 11"	12' - 0"
	50.0	12'-0"	-	12' - 0"	9' - 2"	10' - 7"	12' - 0"
	55.0	12'-0"	-	11' - 8"	7' - 3"	10' - 3"	12' - 0"
	60.0	12'-0"	-	11' - 4"	6' - 7"	9' - 11"	12' - 0"
	60.8	12'-0"	-	11' - 3"	6' - 6"	9' - 11"	12' - 0"
CASE II'	30.0	8'-0"	-	9' - 0"	9' - 0"	9' - 0"	9' - 0"
	35.0	8'-0"	-	9' - 0"	9' - 0"	9' - 0"	9' - 0"
	40.0	8'-0"	-	9' - 0"	9' - 0"	9' - 0"	9' - 0"
	45.0	8'-0"	-	9' - 0"	9' - 0"	9' - 0"	9' - 0"
	50.0	8'-0"	-	9' - 0"	9' - 0"	9' - 0"	9' - 0"
	55.0	8'-0"	-	9' - 0"	9' - 0"	9' - 0"	9' - 0"
	60.0	8'-0"	-	9' - 0"	9' - 0"	9' - 0"	9' - 0"
	65.0	8'-0"	-	9' - 0"	9' - 0"	9' - 0"	9' - 0"
	70.0	8'-0"	-	9' - 0"	9' - 0"	9' - 0"	9' - 0"
	75.0	8'-0"	-	9' - 0"	9' - 0"	9' - 0"	9' - 0"
	80.0	8'-0"	-	9' - 0"	9' - 0"	9' - 0"	9' - 0"
	85.0	8'-0"	-	9' - 0"	9' - 0"	9' - 0"	9' - 0"
	90.0	8'-0"	-	9' - 0"	9' - 0"	9' - 0"	9' - 0"
	95.0	8'-0"	-	9' - 0"	9' - 0"	9' - 0"	9' - 0"
	100.0	8'-0"	-	9' - 0"	8' - 10"	9' - 0"	9' - 0"

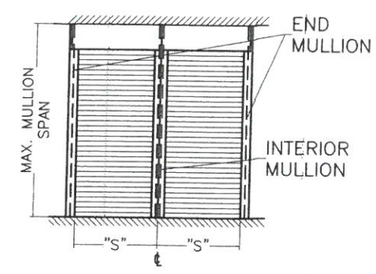

MULLION SPACING: "S"

* MAXIMUM MULLION SPACING SHALL BE SUCH THAT MAX. ALLOWABLE SLAT SPAN FOR THAT DESIGN LOAD SHALL NOT BE EXCEEDED.

† MULLION ORIENTATION IS AS SEEN FROM THE OUTSIDE (EXTERIOR) OF PRODUCT.

TEXAS DEPARTMENT OF INSURANCE – 2006

7/24/15

P.E. SEAL/SIGNATURE/DATE

WALTER A. TILLIT Jr. P.E.
PROFESSIONAL ENGINEER

6355 N.W. 36th. St., Ste. 305
VIRGINIA GARDENS, Fl. 33166
Phone : (305) 871-1530 , Fax : (305) 871-1531

TEXAS LIC. # 90691
FIRM REGISTRATION # F-13790

58mm ER & NER SLAT BERTHA IMPACT PROTECTIVE ROLLING SYSTEM

AMERICAN SHUTTER SYSTEMS ASSOC., INC.
4268 WESTROADS DRIVE
WEST PALM BEACH, FL. 33407
PHONE: (877)999-2772 FAX: (561)209-8380

REV. No	DESCRIPTION	DATE	REV. No	DESCRIPTION	DATE
1	–	–	3	–	
2	–	–	4	–	

DRAWN BY: F.R.L.

07/15/15 DATE

15-248 DRAWING No

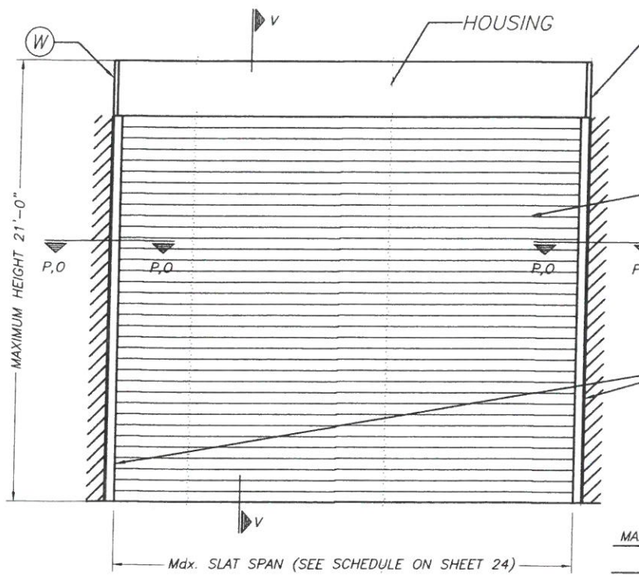

TYPICAL SINGLE UNIT ELEVATION (NO STORM BARS REQUIRED)

NOTE: SEE SHEET 2 & 3 FOR COMPONENTS NOMENCLATURE.

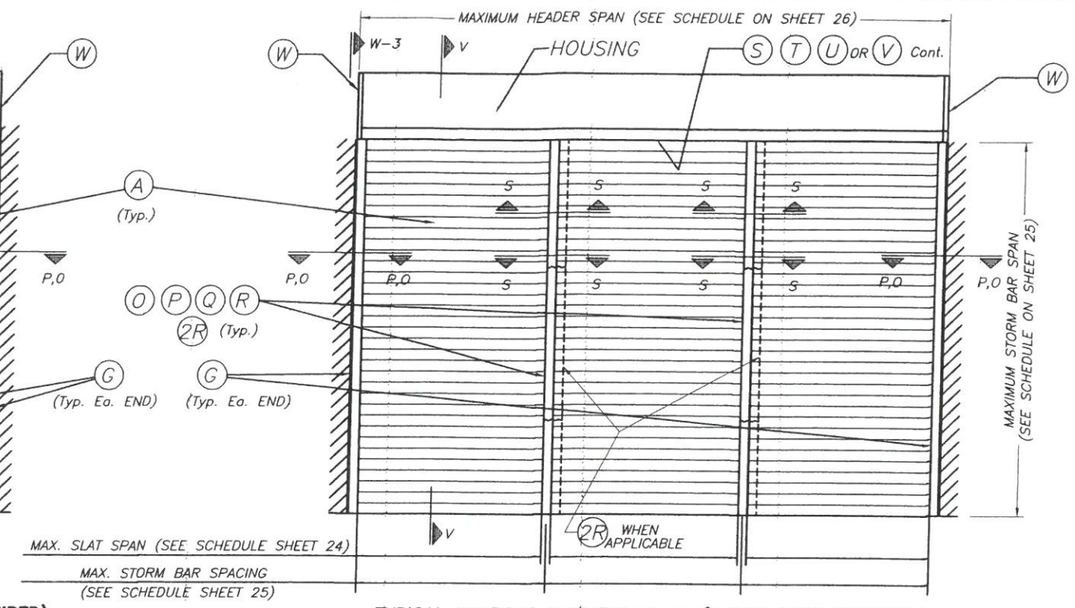

TYPICAL MULTIPLE UNIT ELEVATION (STORM BARS REQUIRED)

NOTE: SEE SHEET 2 & 3 FOR COMPONENTS NOMENCLATURE.

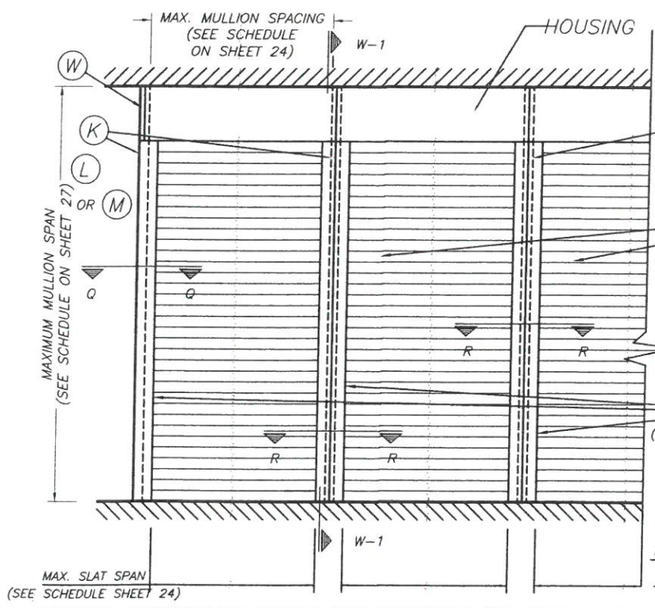

TYPICAL CONSECUTIVE SINGLE UNIT ELEVATION (NO STORM BARS REQUIRED)

NOTE: SEE SHEET 2 & 3 FOR COMPONENTS NOMENCLATURE.

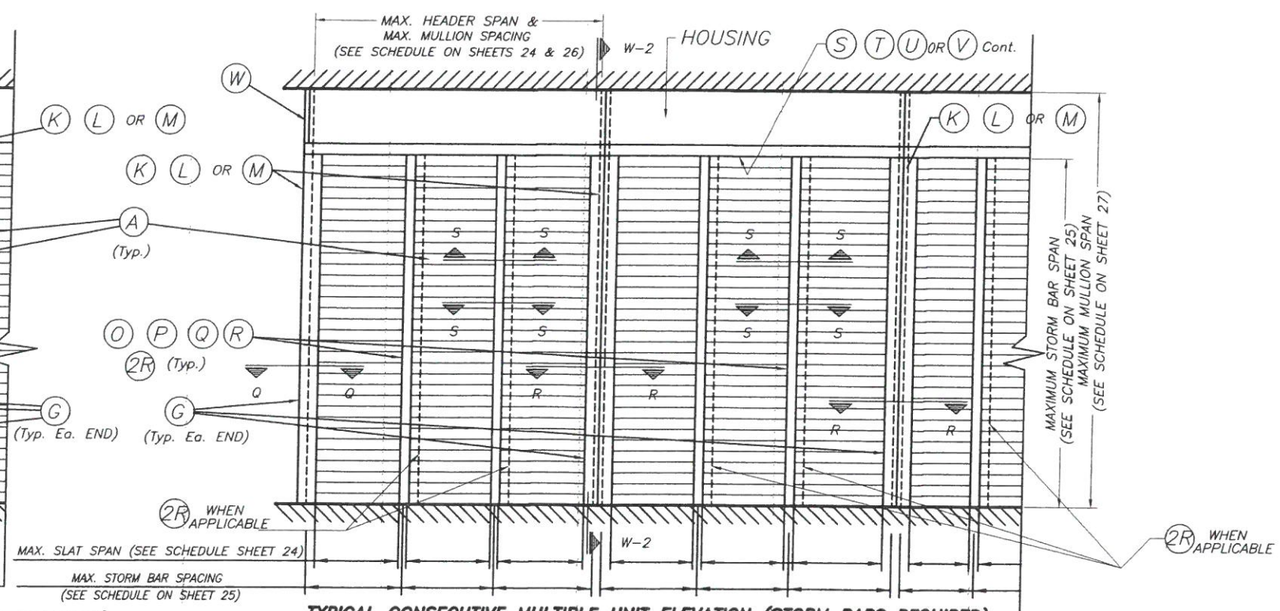

TYPICAL CONSECUTIVE MULTIPLE UNIT ELEVATION (STORM BARS REQUIRED)

NOTE: SEE SHEET 2 & 3 FOR COMPONENTS NOMENCLATURE.

TEXAS DEPARTMENT OF INSURANCE – 2006

NOTE:
SEE SECTIONS ON
SHEETS 18 THRU 23

NON END RETENTION SYSTEM

7/22/15

P.E. SEAL/SIGNATURE/DATE

WALTER A. TILLIT Jr. P.E.
PROFESSIONAL ENGINEER

6355 N.W. 36th. St., Ste. 305
VIRGINIA GARDENS, Fl. 33166
Phone : (305) 871-1530 , Fax : (305) 871-1531

TEXAS LIC. # 90691
FIRM REGISTRATION # F-13790

58mm ER & NER SLAT BERTHA IMPACT PROTECTIVE ROLLING SYSTEM

AMERICAN SHUTTER SYSTEMS ASSOC., INC.
4268 WESTROADS DRIVE
WEST PALM BEACH, FL. 33407
PHONE: (877)999-2772 FAX: (561)209-8380

REV. No	DESCRIPTION	DATE	REV. No	DESCRIPTION	DATE
1	–	–	3	–	
2	–	–	4	–	

DRAWN BY: F.R.L.

07/15/15
DATE

15-248
DRAWING No

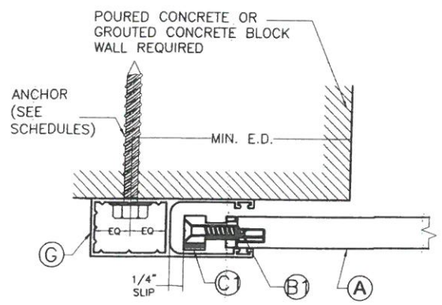

SECTION P–P (1):WALL MOUNT
SCALE: 3/8" = 1"

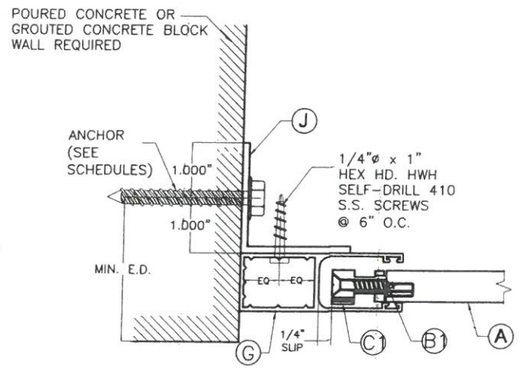

SECTION P–P (2):TRAPPED WALL MOUNT
SCALE: 3/8" = 1"

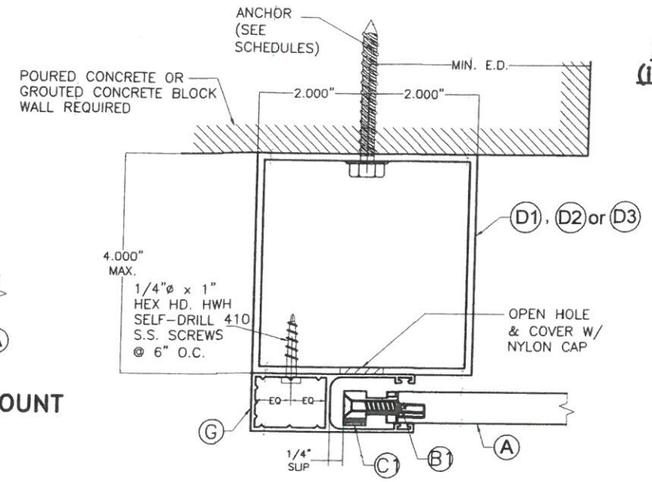

SECTION P–P (3): BUILD–OUT MOUNT
SCALE: 3/8" = 1"

SIDE RAIL ANCHOR SCHEDULE MAXIMUM A.S.D. DESIGN PRESSURE RATING (p.s.f.) AND CORRESPONDING MAXIMUM ANCHOR SPACING (in) FOR SIDE RAIL (G) CONNECTION TO POURED CONCRETE, GROUTED CONCRETE BLOCK WALL OR WOOD

(USE MAXIMUM VALUES BETWEEN POSITIVE AND NEGATIVE A.S.D. LOAD)

MAXIMUM A.S.D. PRESSURE RATING (p.s.f.)	SIDE RAIL (G)		
	WALL MOUNT	TRAPPED MOUNT	BUILD–OUT MOUNT
≤ 25 TO 40	6"	5"	5"
	6"	3"	5"
	6"	6"	6"
>40 TO 70	6"	5"	5"
	3 1/2"	3"**	4"
	6"	5"	6"
>70 TO 90	6"	5"	5"
	3"	3 1/2"*	3 1/2"
	6"	4 1/2"*	6"
>90 TO 140	6"	5"	5"
	3"*	3"***	3"
	6"	3 1/2"*	6"

POURED CONCRETE
GROUTED CONCRETE BLOCK
WOOD

SUBSTRATE LEGEND

* VALID FOR 3'–3" MAX. SPAN
** VALID FOR 4'–5" MAX. SPAN
*** VALID FOR 3'–4" MAX. SPAN

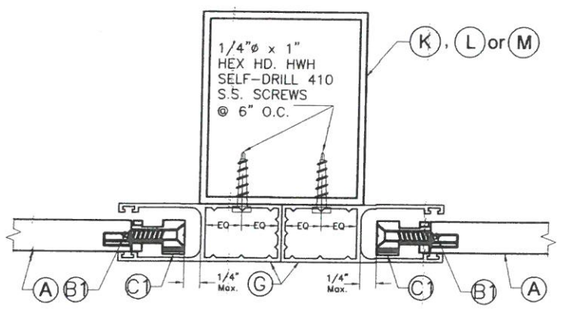

SECTION R–R :MULLION MOUNT (FACE MOUNT)
SCALE: 3/8" = 1"

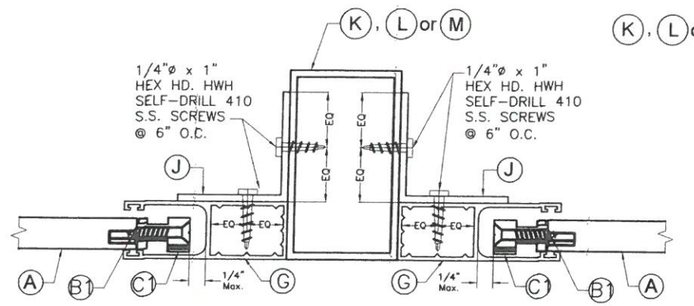

SECTION R–R:MULLION MOUNT (INSIDE MOUNT)
SCALE: 3/8" = 1"

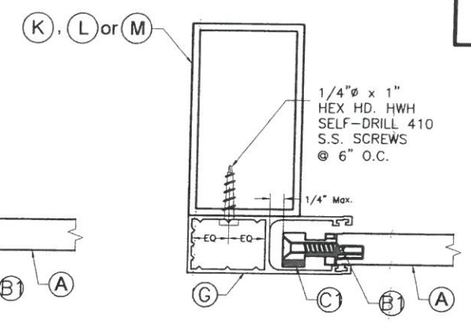

SECTION Q–Q :MULLION MOUNT (FACE MOUNT)
SCALE: 3/8" = 1"

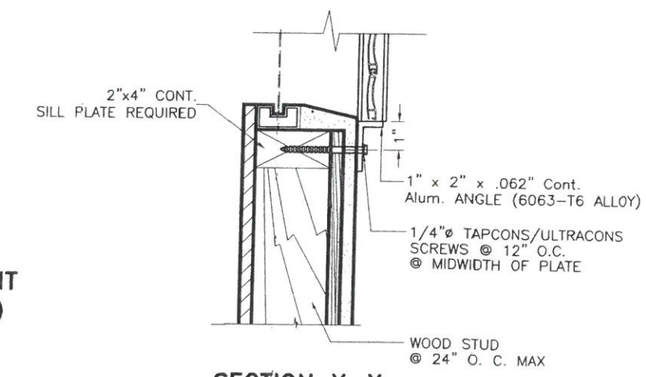

SECTION X–X
SCALE: 3/8" = 1"

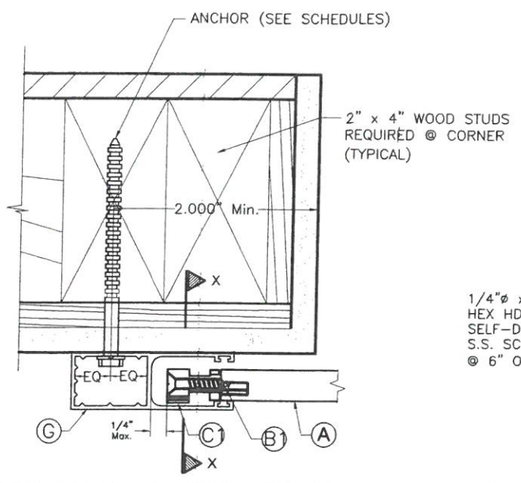

SECTION O–O: WALL MOUNT
SCALE: 3/8" = 1"

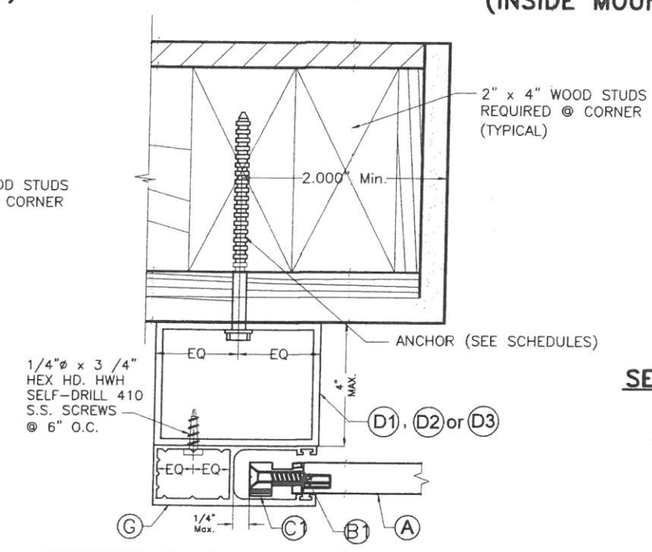

SECTION O–O: BUILD–OUT MOUNT
SCALE: 3/8" = 1"

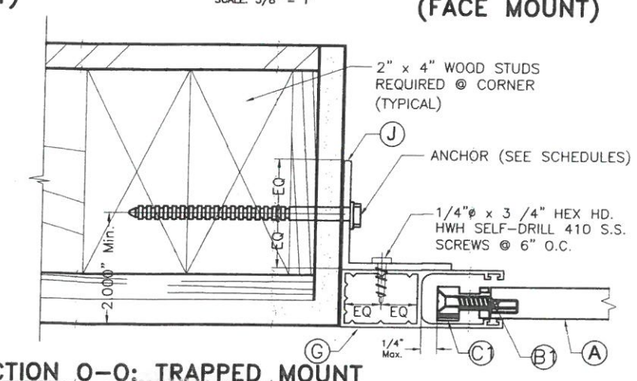

SECTION O–O: TRAPPED MOUNT
SCALE: 3/8" = 1"

SIDE RAIL TO WOOD NOTES:

1. FOR NEW FRAME CONSTRUCTION: WOOD MEMBER TO BE SOUTHERN PINE No. 2 W/ SPECIFIC DENSITY OF 0.55 OR EQUAL.
2. THIS APPROVAL INCLUDES INSTALLATION IN WOOD FOR SINGLE UNITS WITHOUT STORM BARS, MULLIONS & HEADERS AS SHOWN IN THIS SHEET.

NON END RETENTION SYSTEM

TEXAS DEPARTMENT OF INSURANCE – 2006

STATE OF TEXAS
WALTER A. TILLIT JR.
90691
LICENSED
PROFESSIONAL ENGINEER

7/22/15

P.E. SEAL/SIGNATURE/DATE

WALTER A. TILLIT Jr. P.E.
PROFESSIONAL ENGINEER

6355 N.W. 36th. St., Ste. 305
VIRGINIA GARDENS, Fl. 33166
Phone : (305) 871–1530 , Fax : (305) 871–1531

TEXAS LIC. # 90691
FIRM REGISTRATION # F–13790

58mm ER & NER SLAT BERTHA IMPACT PROTECTIVE ROLLING SYSTEM

AMERICAN SHUTTER SYSTEMS ASSOC., INC.
4268 WESTROADS DRIVE
WEST PALM BEACH, FL. 33407
PHONE: (877)999–2772 FAX: (561)209–8380

REV. No	DESCRIPTION	DATE	REV. No	DESCRIPTION	DATE
1	–	–	3	–	
2	–	–	4	–	

DRAWN BY: F.R.L.
07/15/15 DATE
15–248 DRAWING No
SHEET 18 OF 27

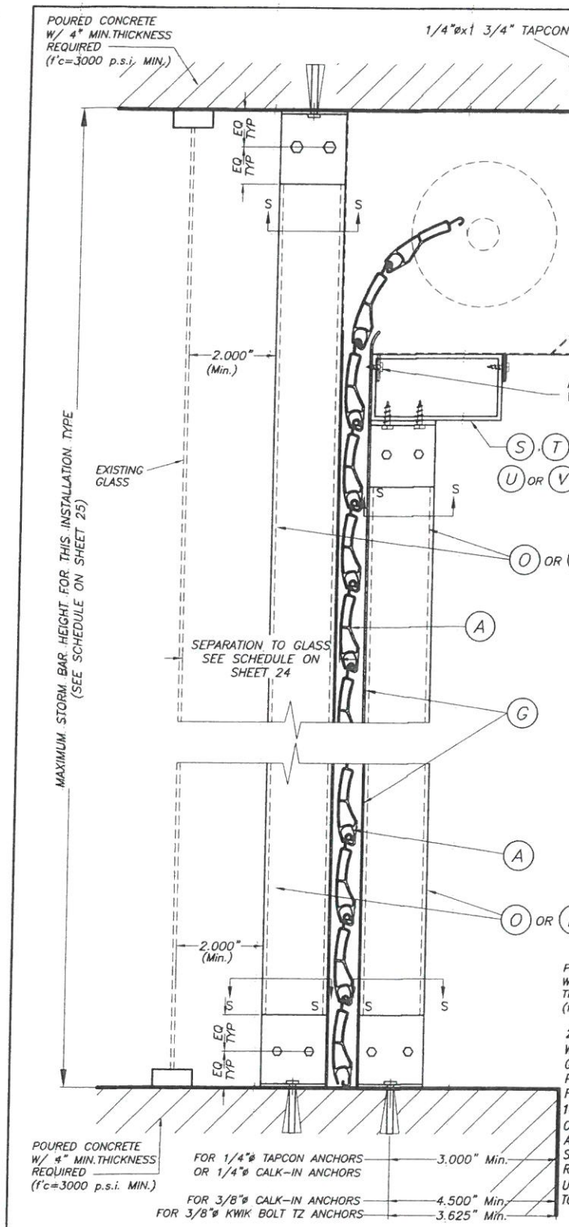

CEILING & FLOOR MOUNTING SECTION V-V(2) INSTALLATION W/ FIXED OR REMOVABLE STORM BARS W/CONCRETE ANCHORS

(SEE SECTION "S" FOR ANCHOR TYPE REQUIREMENT)

SCALE : N. T. S.

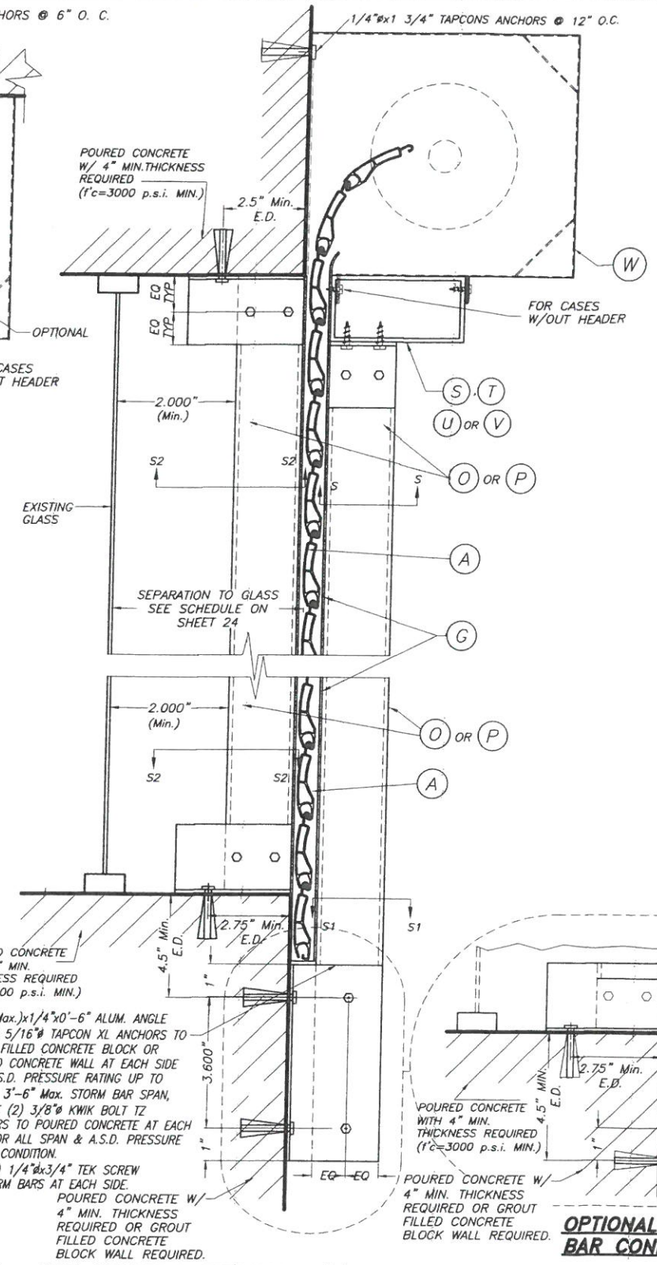

WALL MOUNTING SECTION V-V(1) INSTALLATION W/ FIXED STORM BARS W/ CONCRETE ANCHORS

SCALE : N. T. S.

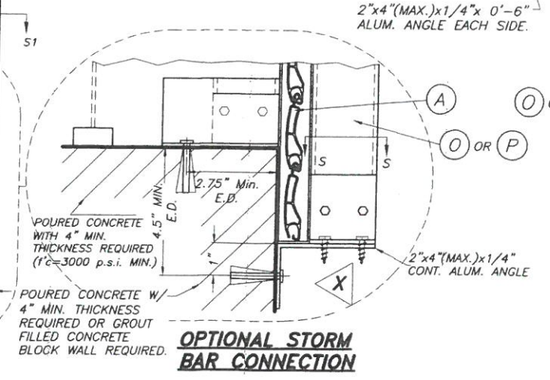

OPTIONAL STORM BAR CONNECTION

SECTION V - V

SINGLE SPAN SECTIONS AND DETAILS ARE SIMILAR TO ABOVE SHOWN WITHOUT STORM BAR & HEADERS.

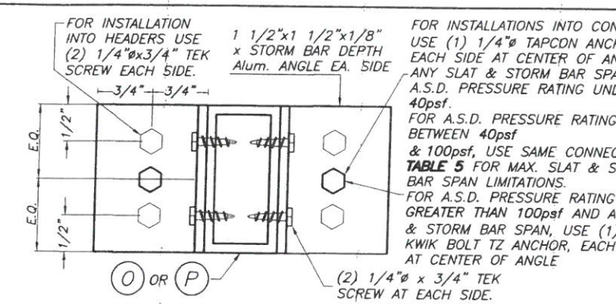

SECTION S - S (FOR FIXED STORM BAR)

SCALE : 1/2" = 1"

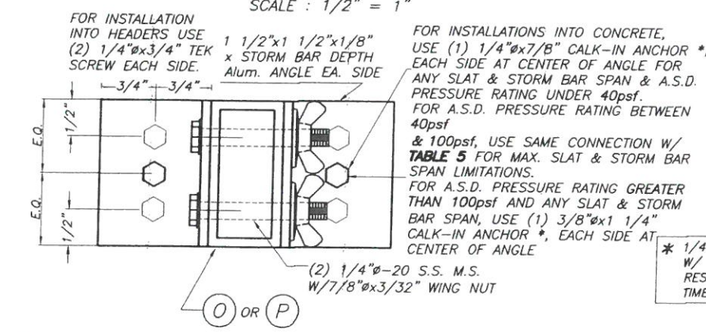

SECTION S - S (FOR REMOVABLE STORM BAR)

SCALE : 1/2" = 1"

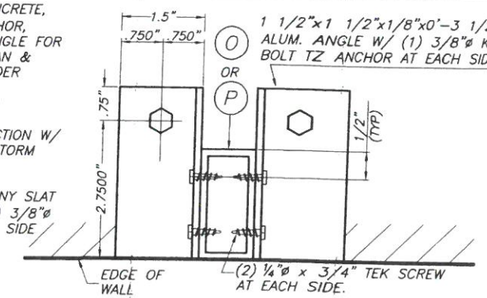

SECTION S2 - S2

SCALE : 1/4" = 1"

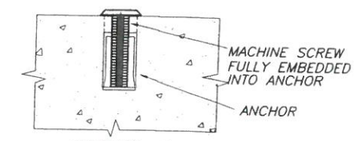

DETAIL A

N.T.S.

* 1/4" ø-20 OR 3/8" ø-16 MACHINE SCREWS USED JOINTLY W/ 1/4" ø x 7/8" OR 3/8" ø x 1 1/4" CALK-IN ANCHORS RESPECTIVELY SHALL BE LEFT TOGETHER W/ ANCHORS AT THE TIME STORM BARS ARE REMOVED. (SEE DET. A).

TABLE 5

A.S.D. PRESSURE RATING (p.s.f.)	MAX. SLAT SPAN	"L" MAX. STORM BAR SPAN
40.0	3'-0"	8'-0"
	4'-0"	7'-9"
	5'-0"	6'-11"
	6'-0"	5'-9"
50.0	3'-0"	8'-0"
	4'-0"	6'-11"
	5'-0"	5'-6"
	6'-0"	4'-7"
60.0	3'-0"	7'-4"
	4'-0"	5'-9"
	5'-0"	4'-7"
80.0	3'-0"	5'-9"
	4'-0"	4'-4"
100.0	3'-0"	4'-7"
	4'-0"	3'-5"

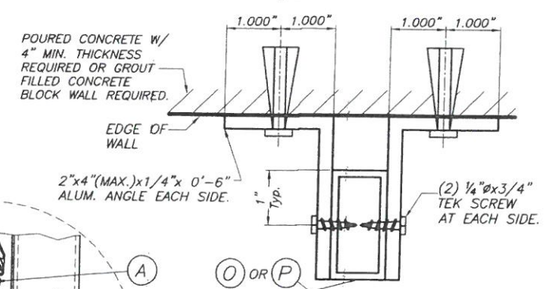

SECTION S1 - S1

SCALE : N. T. S.

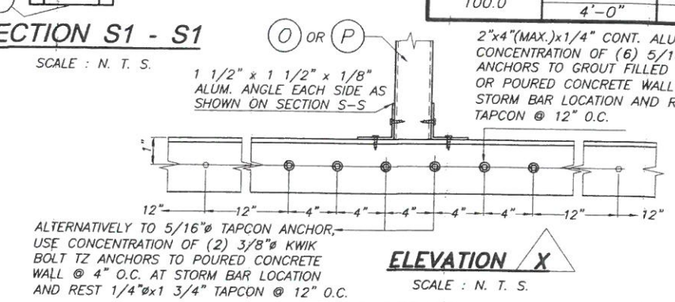

ELEVATION X

SCALE : N. T. S.

TEXAS DEPARTMENT OF INSURANCE - 2006

NON END RETENTION SYSTEM

7/22/15

P.E. SEAL/SIGNATURE/DATE

WALTER A. TILLIT Jr. P.E.
PROFESSIONAL ENGINEER
6355 N.W. 36th. St., Ste. 305
VIRGINIA GARDENS, Fl. 33166
Phone : (305) 871-1530 , Fax : (305) 871-1531
TEXAS LIC. # 90691
FIRM REGISTRATION # F-13790

58mm ER & NER SLAT BERTHA IMPACT PROTECTIVE ROLLING SYSTEM

AMERICAN SHUTTER SYSTEMS ASSOC., INC.
4268 WESTROADS DRIVE
WEST PALM BEACH, FL. 33407
PHONE: (877)999-2772 FAX: (561)209-8380

REV. No	DESCRIPTION	DATE	REV. No	DESCRIPTION	DATE
1	-	-	3	-	
2	-	-	4	-	

DRAWN BY: F.R.L.

07/15/15 DATE

15-248 DRAWING No

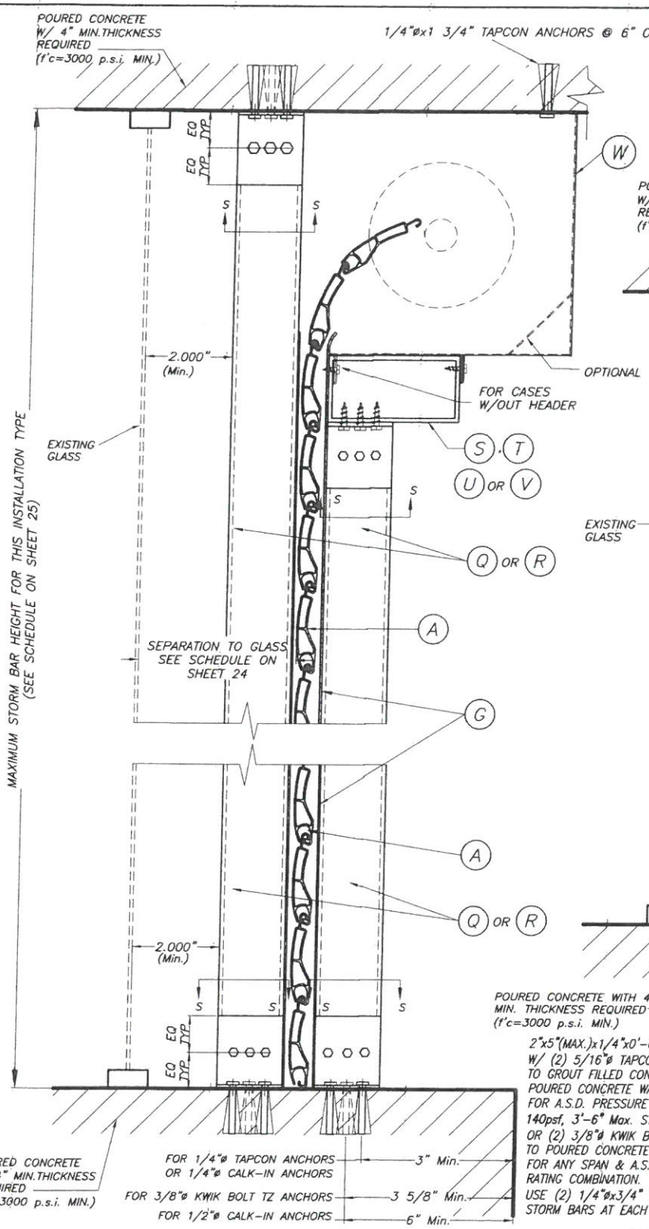

CEILING & FLOOR MOUNTING SECTION V-V(2) INSTALLATION W/ FIXED OR REMOVABLE STORM BARS W/CONCRETE ANCHORS

(SEE SECTION "S" FOR ANCHOR TYPE REQUIREMENT)

SCALE : N.T.S.

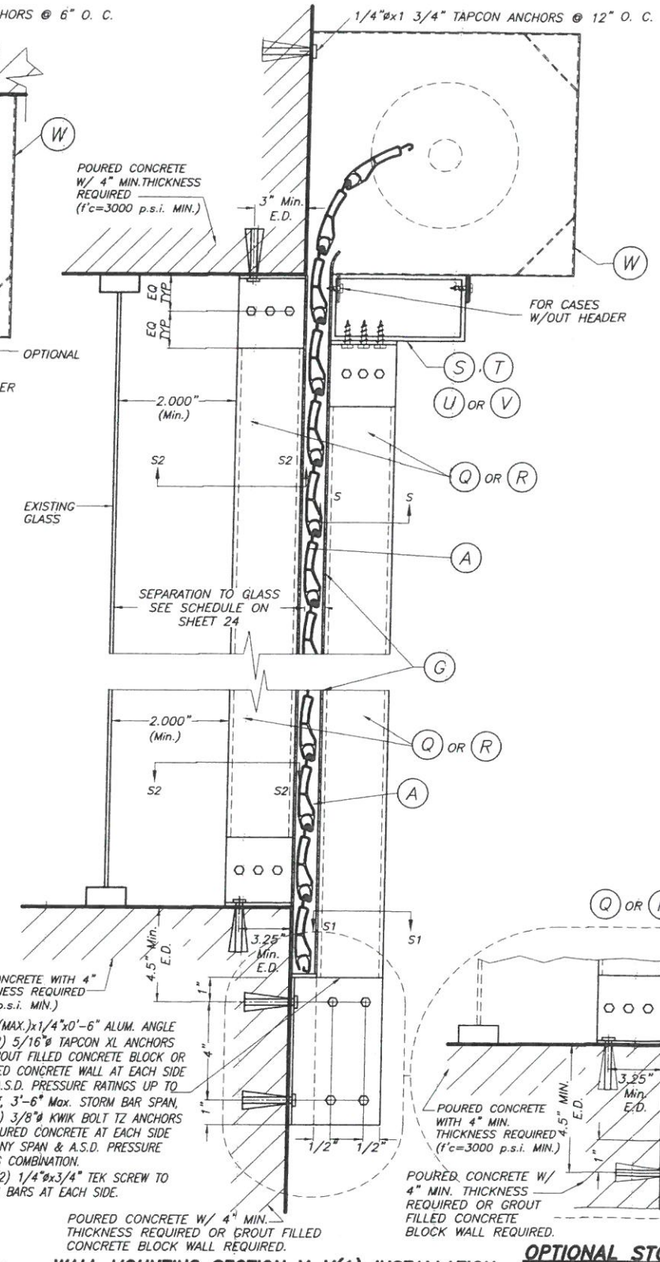

WALL MOUNTING SECTION V-V(1) INSTALLATION W/ FIXED STORM BARS W/CONCRETE ANCHORS

SCALE : N.T.S.

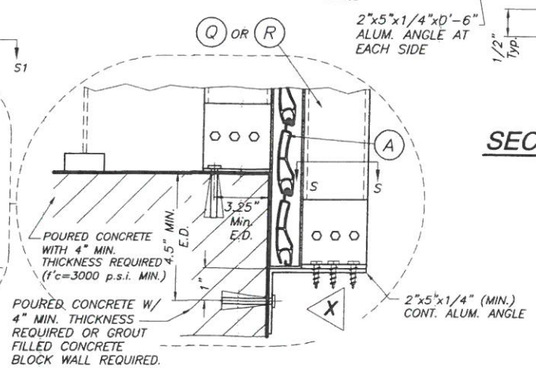

OPTIONAL STORM BAR CONNECTION

SECTION V - V

SINGLE SPAN SECTIONS AND DETAILS ARE SIMILAR TO ABOVE SHOWN WITHOUT STORM BAR & HEADERS.

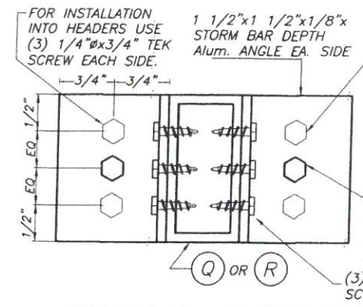

SECTION S - S (FOR FIXED STORM BAR)

SCALE : N.T.S.

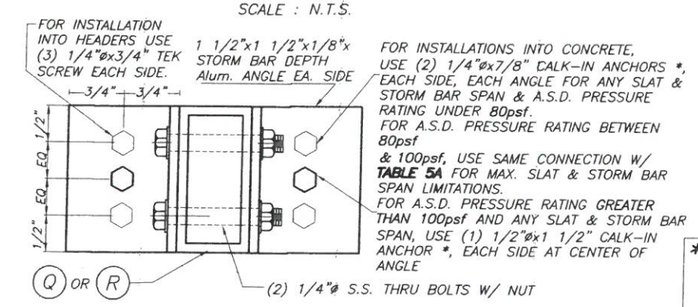

SECTION S - S (FOR REMOVABLE STORM BAR)

SCALE : N.T.S.

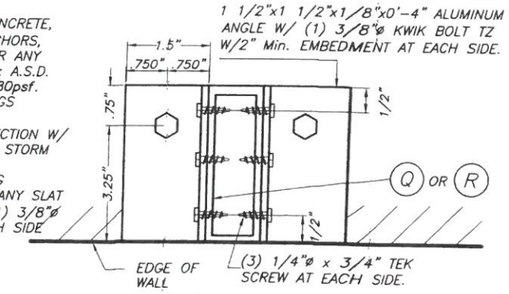

SECTION S2 - S2

SCALE : N.T.S.

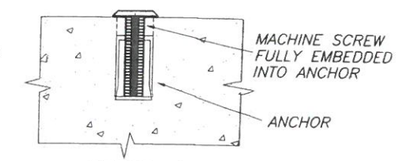

DETAIL A

SCALE : 1/2" = 1"

* 1/4"ø-20 OR 1/2"ø-13 MACHINE SCREWS USED JOINTLY W/ 1/4"øx7/8" OR 1/2"øx1 1/2" CALK-IN ANCHORS RESPECTIVELY SHALL BE LEFT TOGETHER W/ ANCHORS AT THE TIME STORM BARS ARE REMOVED. (SEE DET. A).

TABLE 5A

A.S.D. PRESSURE RATING (p.s.f.)	MAX. SLAT SPAN	"L" MAX. STORM BAR SPAN
80.0	3'-0"	9'-11"
	4'-0"	8'-8"
	5'-0"	6'-11"
100.0	3'-0"	9'-2"
	4'-0"	6'-11"
	5'-0"	5'-6"

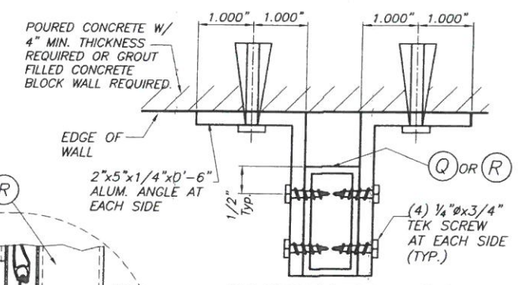

SECTION S1 - S1

SCALE : N. T. S.

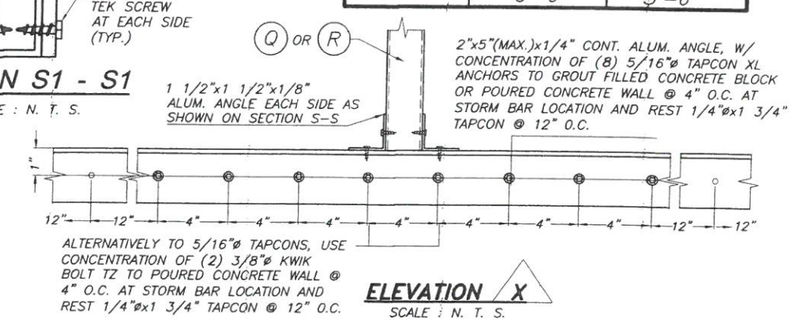

ELEVATION X

SCALE : N. T. S.

TEXAS DEPARTMENT OF INSURANCE – 2006

NON END RETENTION SYSTEM

7/22/15

P.E. SEAL/SIGNATURE/DATE

WALTER A. TILLIT Jr. P.E.
PROFESSIONAL ENGINEER

6355 N.W. 36th. St., Ste. 305
VIRGINIA GARDENS, Fl. 33166
Phone : (305) 871-1530 , Fax : (305) 871-1531

TEXAS LIC. # 90691
FIRM REGISTRATION # F-13790

58mm ER & NER SLAT BERTHA IMPACT PROTECTIVE ROLLING SYSTEM

AMERICAN SHUTTER SYSTEMS ASSOC., INC.
4268 WESTROADS DRIVE
WEST PALM BEACH, FL. 33407
PHONE: (877)999-2772 FAX: (561)209-8380

REV. No	DESCRIPTION	DATE	REV. No	DESCRIPTION	DATE
1	–	–	3	–	
2	–	–	4	–	

DRAWN BY: F.R.L.

07/15/15 DATE

15-248 DRAWING No

SHEET 20 OF 27

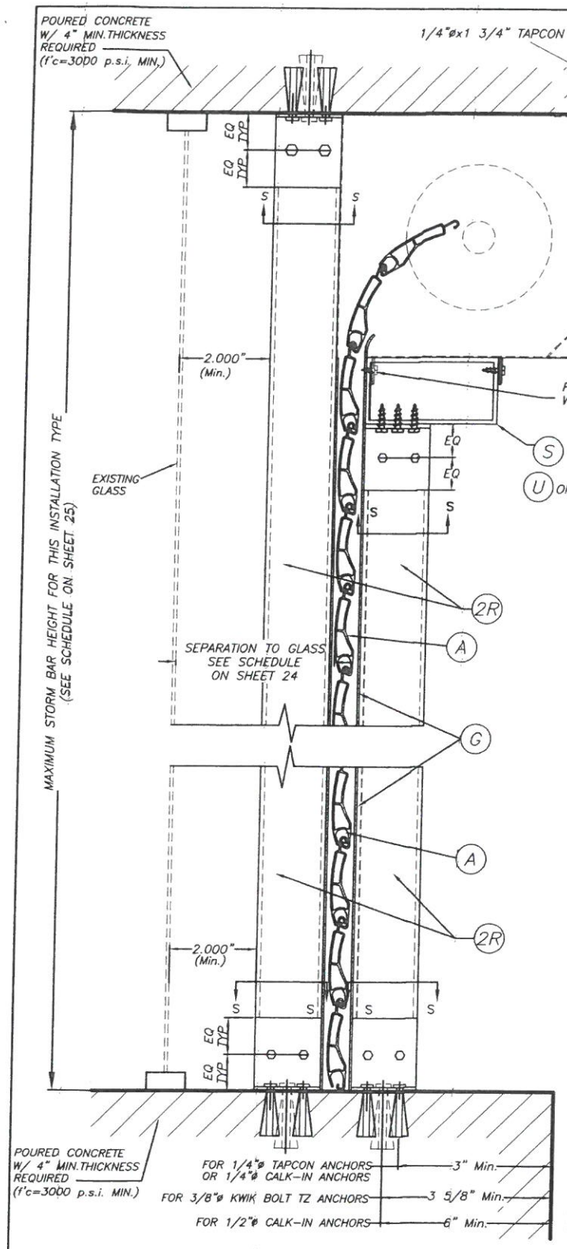

CEILING & FLOOR MOUNTING SECTION V-V(2) INSTALLATION W/ FIXED OR REMOVABLE STORM BARS W/CONCRETE ANCHORS

(SEE SECTION "S" FOR ANCHOR TYPE REQUIREMENT)

SCALE : N.T.S.

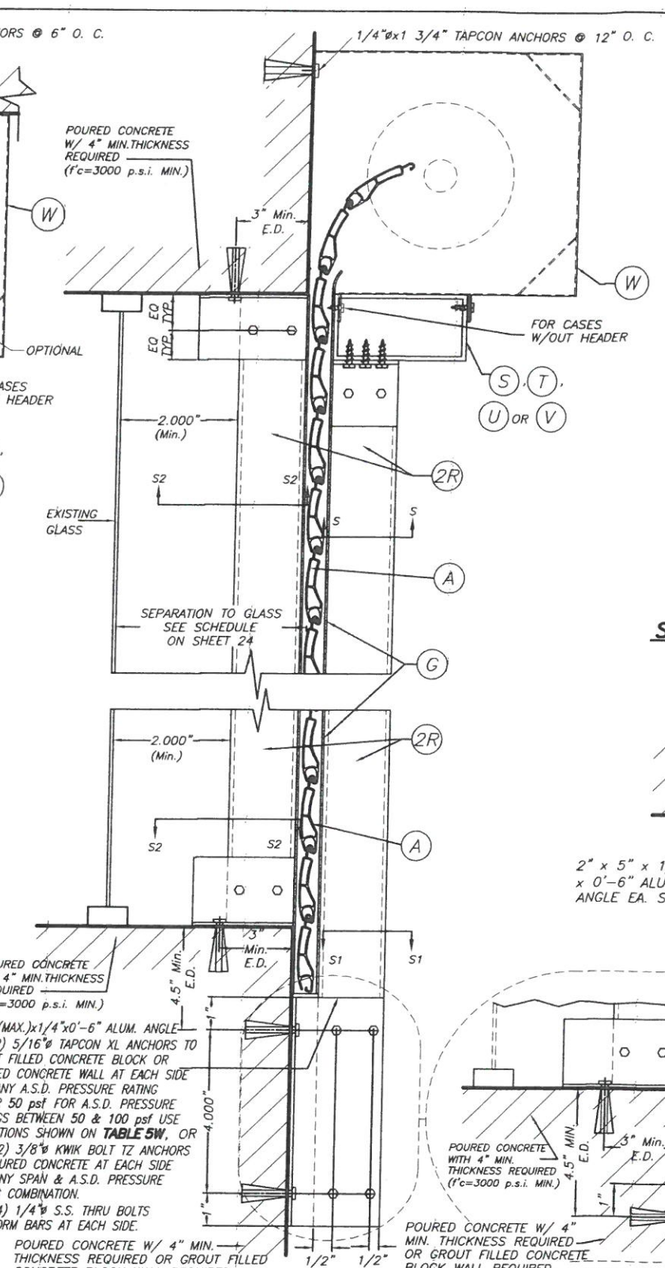

WALL MOUNTING SECTION V-V(1) INSTALLATION W/ FIXED STORM BARS W/ CONCRETE ANCHORS

SCALE : N.T.S.

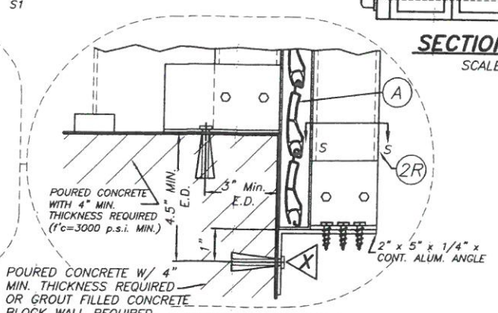

OPTIONAL STORM BAR CONNECTION

SCALE : N.T.S.

SECTION V - V

SINGLE SPAN SECTIONS AND DETAILS ARE SIMILAR TO ABOVE SHOWN WITHOUT STORM BAR & HEADERS.

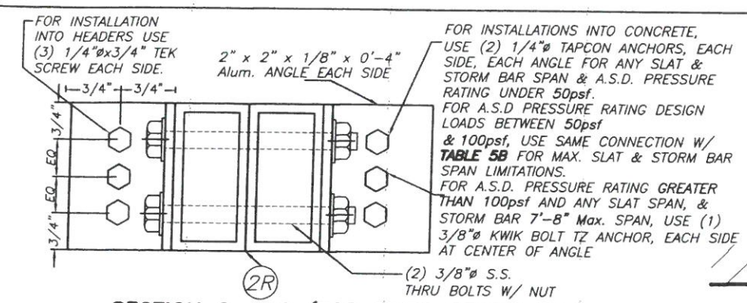

SECTION S - S (FOR FIXED STORM BAR)

SCALE : N.T.S.

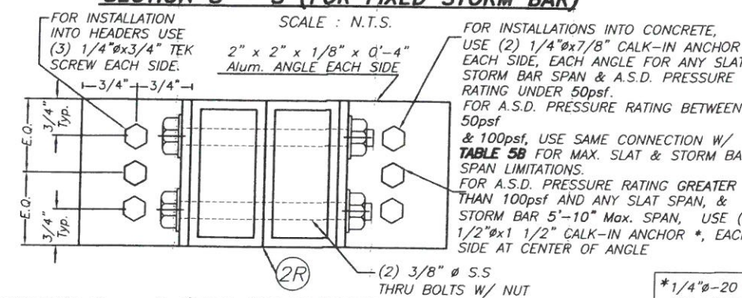

SECTION S - S (FOR REMOVABLE STORM BAR)

SCALE : N.T.S.

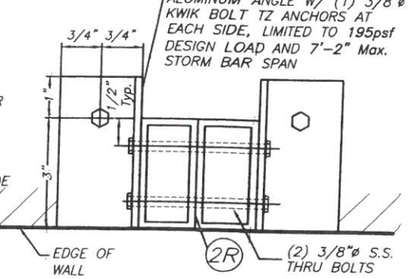

SECTION S2 - S2

SCALE : N.T.S.

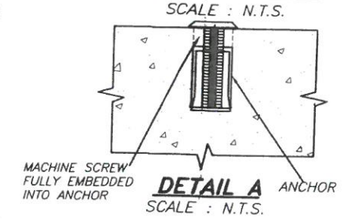

DETAIL A

SCALE : N.T.S.

*1/4"ø-20 OR 1/2"ø-13 MACHINE SCREWS USED JOINTLY W/ 1/4"øx7/8" OR 1/2"øx1 1/2" CALK-IN ANCHORS RESPECTIVELY SHALL BE LEFT TOGETHER W/ ANCHORS AT THE TIME STORM BARS ARE REMOVED. (SEE DET. A).

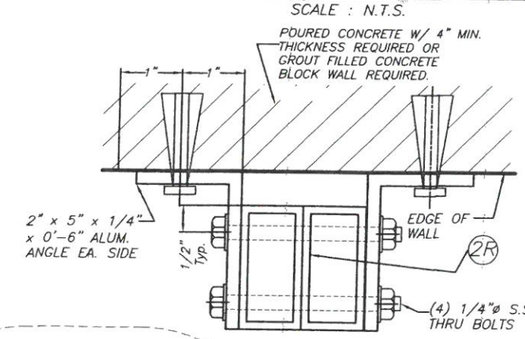

SECTION S1 - S1

SCALE : N.T.S.

TABLE 5W

A.S.D. PRESSURE RATING (p.s.f.)	MAX. SLAT SPAN	"L" MAX. STORM BAR SPAN
50.0	3'-0"	13'-4"
	4'-0"	10'-5"
	5'-0"	8'-4"
	6'-0"	6'-11"
60.0	3'-0"	11'-7"
	4'-0"	8'-8"
	5'-0"	6'-11"
80.0	3'-0"	8'-8"
	4'-0"	6'-6"
	5'-0"	5'-2"
100.0	3'-0"	6'-11"
	4'-0"	5'-2"
	5'-0"	4'-2"

TABLE 5B

A.S.D. PRESSURE RATING (p.s.f.)	MAX. SLAT SPAN	"L" MAX. STORM BAR SPAN
50.0	3'-0"	13'-4"
	4'-0"	12'-5"
	5'-0"	11'-1"
	6'-0"	9'-3"
60.0	3'-0"	12'-9"
	4'-0"	11'-7"
	5'-0"	9'-3"
80.0	3'-0"	11'-6"
	4'-0"	8'-8"
	5'-0"	6'-11"
100.0	3'-0"	9'-2"
	4'-0"	6'-11"
	5'-0"	5'-6"

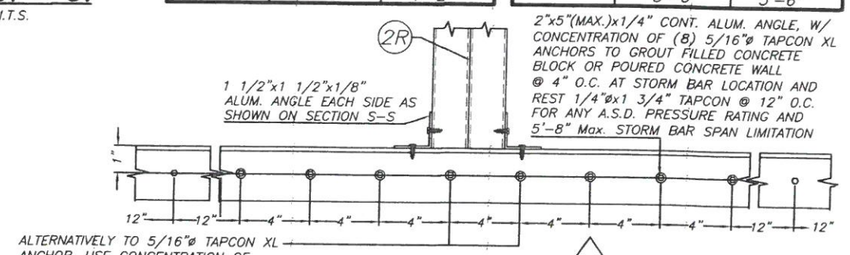

ALTERNATIVELY TO 5/16"ø TAPCON XL ANCHOR, USE CONCENTRATION OF (2) 3/8"ø KWIK BOLT TZ ANCHORS TO POURED CONCRETE WALL @ 4" O.C. AT STORM BAR LOCATION AND REST 1/4"øx1 3/4" TAPCON @ 12" O.C.

ELEVATION X

SCALE : N. T. S.

TEXAS DEPARTMENT OF INSURANCE - 2006

NON END RETENTION SYSTEM

7/22/15

P.E. SEAL/SIGNATURE/DATE

WALTER A. TILLIT Jr. P.E.
PROFESSIONAL ENGINEER

6355 N.W. 36th. St., Ste. 305
VIRGINIA GARDENS, Fl. 33166
Phone : (305) 871-1530 , Fax : (305) 871-1531

TEXAS LIC. # 90691
FIRM REGISTRATION # F-13790

58mm ER & NER SLAT BERTHA IMPACT PROTECTIVE ROLLING SYSTEM

AMERICAN SHUTTER SYSTEMS ASSOC., INC.
4268 WESTROADS DRIVE
WEST PALM BEACH, FL. 33407
PHONE: (877)999-2772 FAX: (561)209-8380

REV. No	DESCRIPTION	DATE	REV. No	DESCRIPTION	DATE
1	-	-	3	-	
2	-	-	4	-	

DRAWN BY: F.R.L.

07/15/15 DATE

15-248 DRAWING No

SHEET 21 OF 27

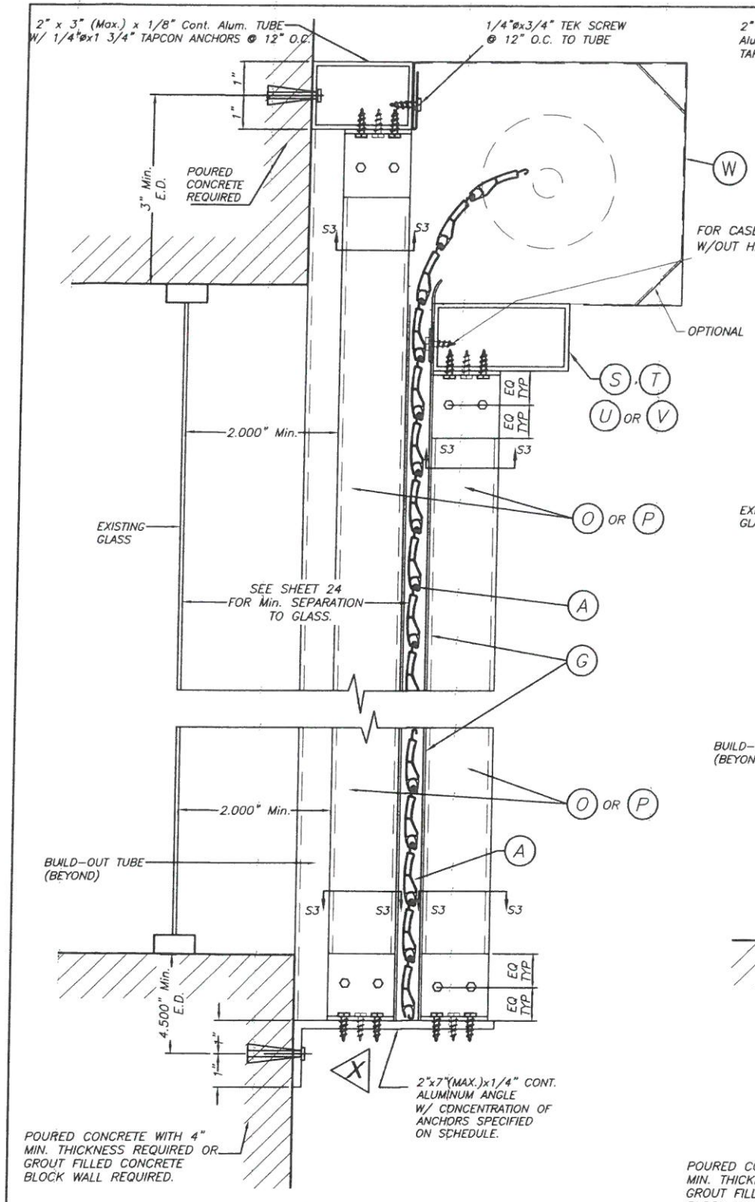

CASE I

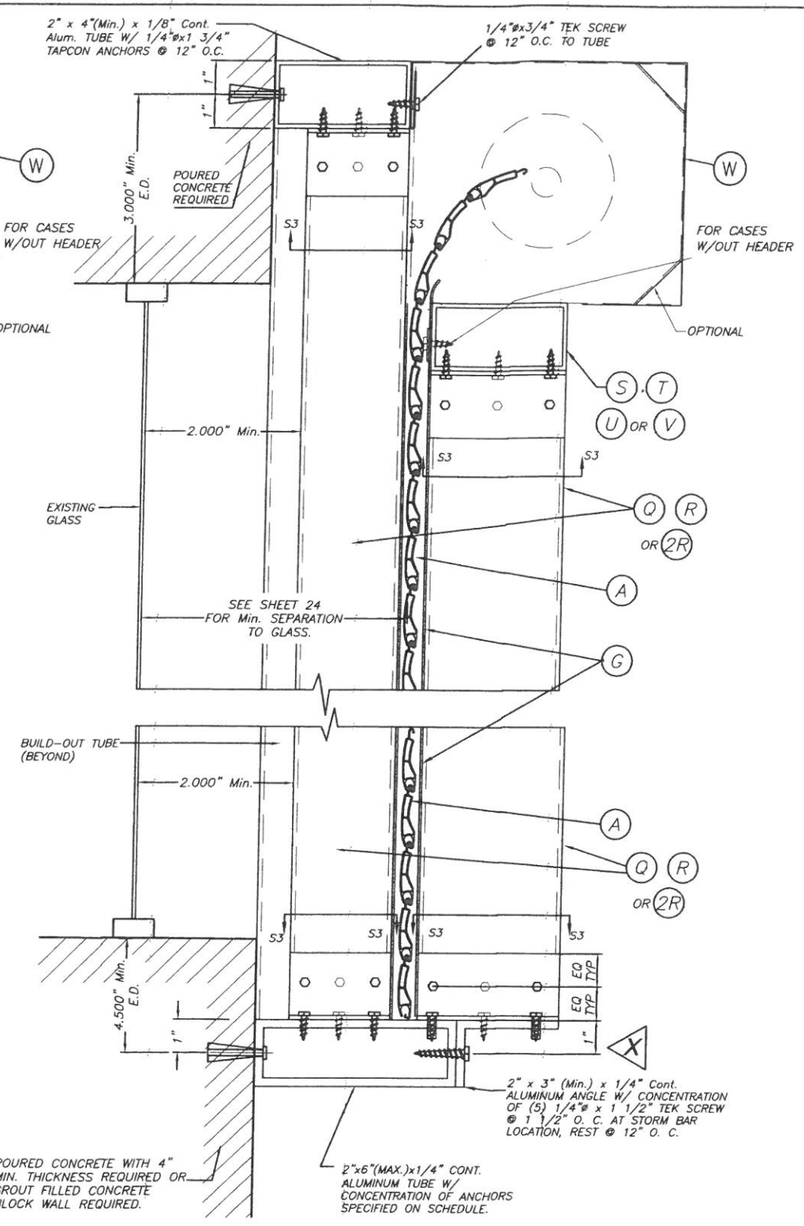

CASE II

FIXED STORM BAR CONNECTION AT BUILD-OUT INSTALLATIONS W/SHEET METAL SCREWS OR MACHINE SCREWS

SCALE : 1/4" = 1"

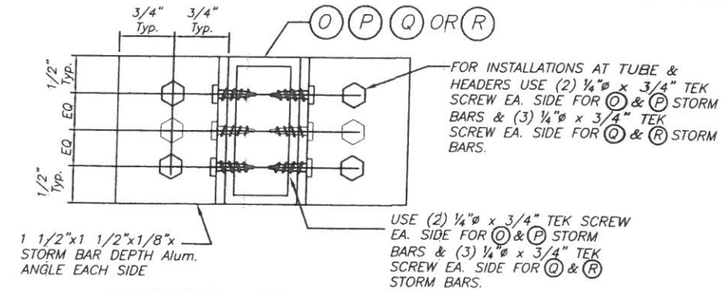

SECTION S3 – S3

SCALE : 1/2" = 1"

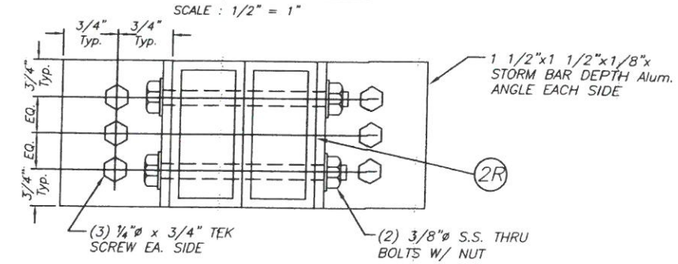

SECTION S3 – S3

SCALE : 1/2" = 1"

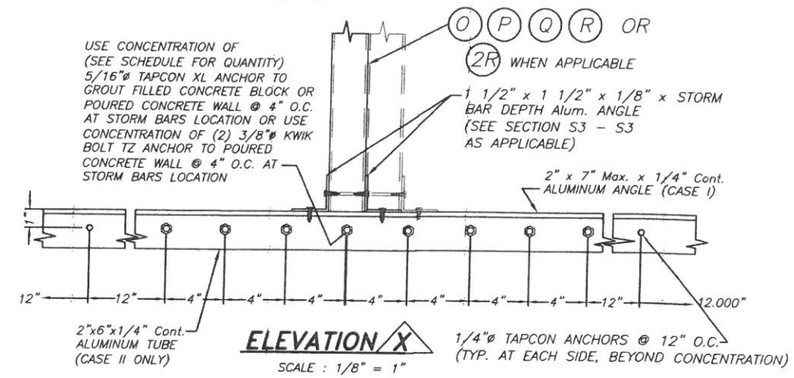

ELEVATION X

SCALE : 1/8" = 1"

ANCHORS & STORM BARS SCHEDULE FOR ELEVATION X

ANCHOR TYPE & QUANTITY	STORM BAR TYPE
(6) 5/16" ø TAPCON XL	O P
(8) 5/16" ø TAPCON XL	Q R
(8) 5/16" ø TAPCON XL	2R *

LIMITED TO 195psf, 3'-1" SPACING & 7'-0" MAX. SPAN STORM BAR 2R

TEXAS DEPARTMENT OF INSURANCE – 2006

SECTION V – V(3)

SINGLE SPAN SECTIONS AND DETAILS ARE SIMILAR TO ABOVE SHOWN WITHOUT STORM BAR & HEADERS.

NON END RETENTION SYSTEM

7/22/15

P.E. SEAL/SIGNATURE/DATE

WALTER A. TILLIT Jr. P.E.
PROFESSIONAL ENGINEER

6355 N.W. 36th. St., Ste. 305
VIRGINIA GARDENS, Fl. 33166
Phone : (305) 871-1530 , Fax : (305) 871-1531

TEXAS LIC. # 90691
FIRM REGISTRATION # F-13790

58mm ER & NER SLAT BERTHA IMPACT PROTECTIVE ROLLING SYSTEM

AMERICAN SHUTTER SYSTEMS ASSOC., INC.
4268 WESTROADS DRIVE
WEST PALM BEACH, FL. 33407
PHONE: (877)999-2772 FAX: (561)209-8380

REV. No	DESCRIPTION	DATE	REV. No	DESCRIPTION	DATE
1	–	–	3	–	
2	–	–	4	–	

DRAWN BY: F.R.L.

07/15/15 DATE

15-248 DRAWING No

SHEET 22 OF 27

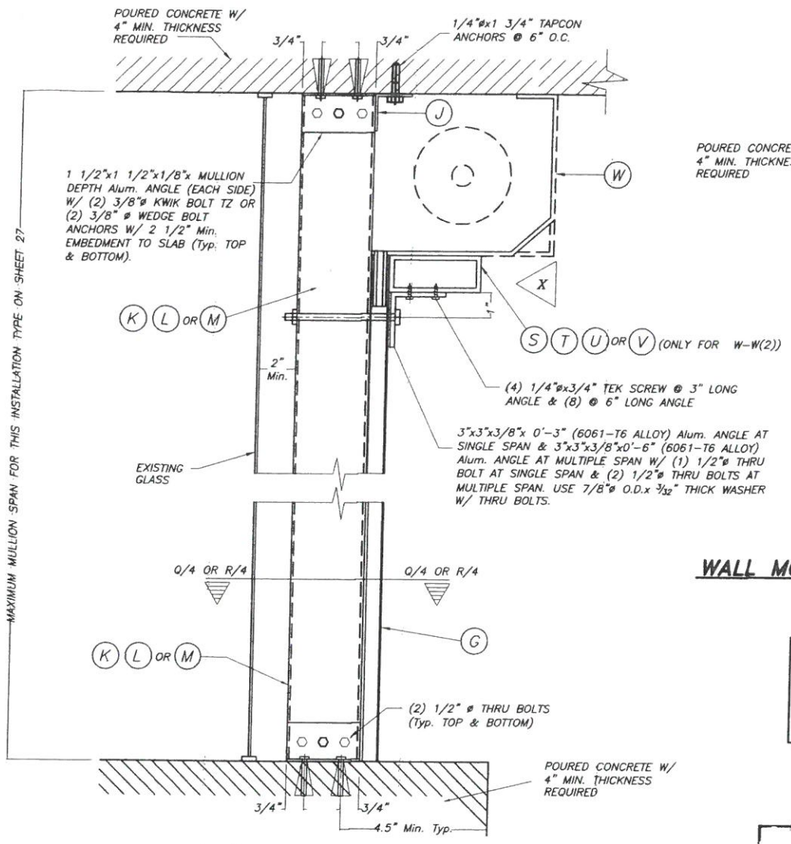

FLOOR/CEILING MOUNTING : SECTION W-W (1). W/O HEADER SECTION W-W (2). W/HEADER

SCALE : 1/8" = 1"

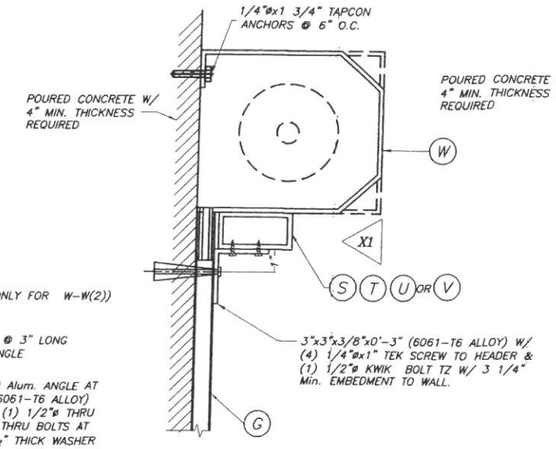

ALTERNATIVE: 1 WALL MOUNTING : SECTION W-W (3)

SCALE : 1/8" = 1"

NOTE:
THIS INSTALLATION IS ONLY VALID FOR STORM BARS WITH MAX. SPAN= 7'-0", HEADERS CON 12'-0" MAX. SINGLE SPAN & 80 p.s.f. MAXIMUM A.S.D. PRESSURE RATING, OR STORM BARS WITH MAX. SPAN = 6'-0", HEADERS WITH 15'-0" SINGLE 80 p.s.f. MAXIMUM A.S.D. PRESSURE RATING.

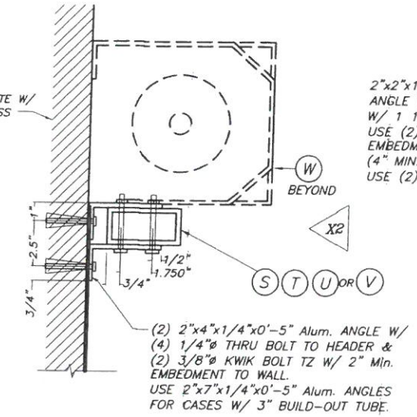

ALTERNATIVE: 2 WALL MOUNTING : SECTION W-W(3)

SCALE : 1/8" = 1"

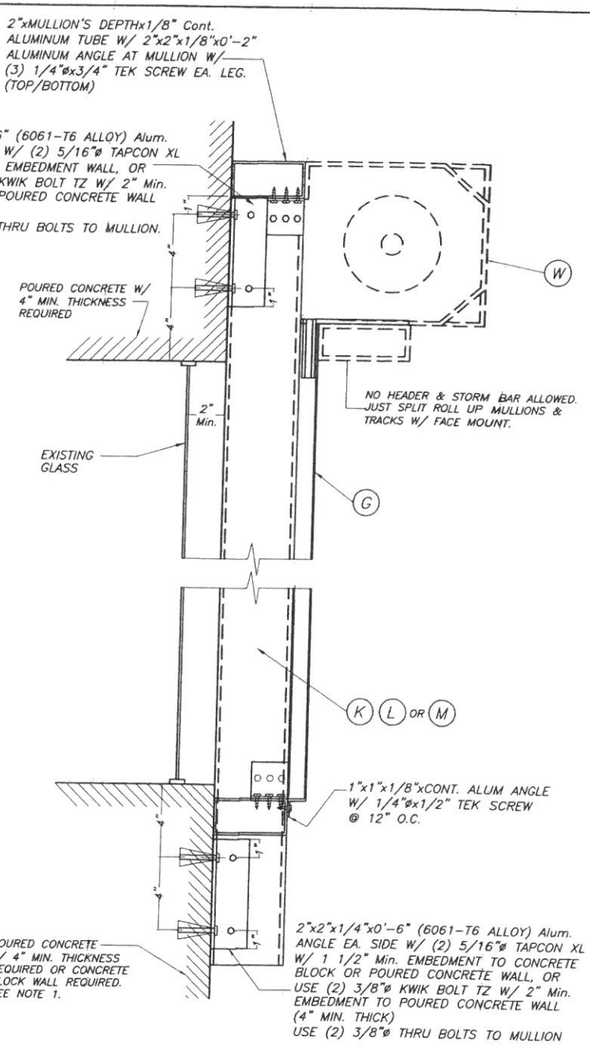

WALL MOUNTING : MULLION CONNECTION AT TOP & BOTTOM : SECTION W-W (1)

SCALE : 1/8" = 1"

NOTE 1:

EXISTING WALL MAY CONCRETE BLOCK FOR A.S.D. PRESSURE RATING UP TO 130.0 psf W/ 4'-0" Max. MULLION SPAN AND 4'-0" Max. MULLION SPACING AND SHALL BE 4" MIN. THICK POURED CONCRETE FOR ALL GREATER MULLION SPAN AND A.S.D. PRESSURE RATING COMBINATIONS.

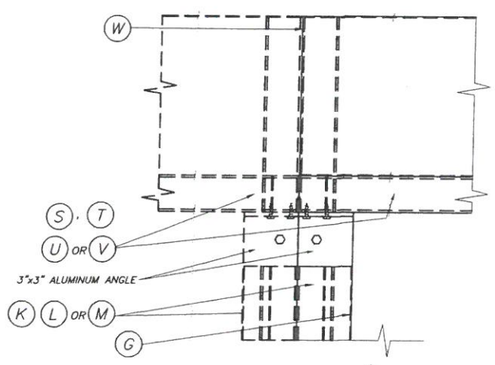

ELEVATION X

SCALE : 1/8" = 1"

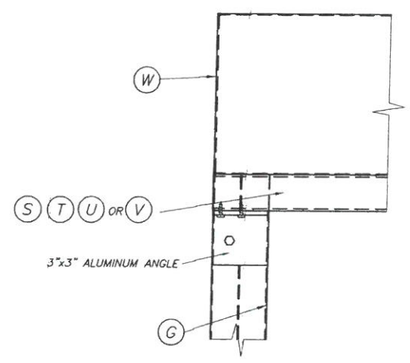

ELEVATION X1

SCALE : 1/8" = 1"

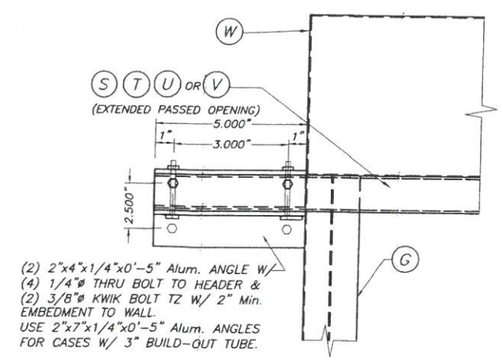

ELEVATION X2

SCALE : 1/8" = 1"

TYPICAL HEADER CONNECTION AT ENDS: SECTION W-W

NON END RETENTION SYSTEM

TEXAS DEPARTMENT OF INSURANCE – 2006

7/22/15

P.E. SEAL/SIGNATURE/DATE

WALTER A. TILLIT Jr. P.E.
PROFESSIONAL ENGINEER

6355 N.W. 36th. St., Ste. 305
VIRGINIA GARDENS, Fl. 33166
Phone : (305) 871-1530 , Fax : (305) 871-1531

TEXAS LIC. # 90691
FIRM REGISTRATION # F-13790

58mm ER & NER SLAT BERTHA IMPACT PROTECTIVE ROLLING SYSTEM

AMERICAN SHUTTER SYSTEMS ASSOC., INC.
4268 WESTROADS DRIVE
WEST PALM BEACH, FL. 33407
PHONE: (877)999-2772 FAX: (561)209-8380

REV. No	DESCRIPTION	DATE	REV. No	DESCRIPTION	DATE
1	–	–	3	–	
2	–	–	4	–	

DRAWN BY: F.R.L.

07/15/15 DATE

15-248 DRAWING No

SHEET 23 OF 27

SLAT PERFORMANCE CHART #1, MAXIMUM A.S.D. DESIGN PRESSURE RATING (psf) AND CORRESPONDING MAXIMUM SLAT SPAN "L" (ft)

(USE MAXIMUM VALUES BETWEEN POSITIVE AND NEGATIVE A.S.D. LOAD)

MAXIMUM A.S.D. DESIGN PRESSURE RATING (p.s.f.)	MAXIMUM SLAT SPAN "L" (ft)	MINIMUM SEPARATION TO GLASS (in) ▲	
	SINGLE & MULTIPLE UNIT *	SINGLE & MULTIPLE UNIT **	SINGLE & MULTIPLE UNIT ***
25.0	8'-0"	6 7/16"	6 7/16"
30.0	7'-9"	6 1/2"	6 1/2"
35.0	7'-2"	6 3/8"	6 3/8"
40.0	6'-8"	6 1/4"	6 1/4"
45.0	6'-4"	5 13/16"	5 13/16"
50.0	6'-0"	5 1/2"	5 1/2"
55.0	5'-11"	5 1/2"	5 1/2"
60.0	5'-9"	5 3/8"	5 3/8"
65.0	5'-8"	5 7/16"	5 7/16"
70.0	5'-7'	5 9/16"	5 9/16"
75.0	5'-5"	5 5/16"	5 5/16"
80.0	5'-4"	5 5/16"	5 5/16"
85.0	5'-1"	4 3/4"	4 3/4"
90.0	5'-0"	4 3/4"	4 3/4"
95.0	4'-10"	4 7/16"	4 7/16"
100.0	4'-9"	4 3/8"	4 3/8"
105.0	4'-7"	4 1/4"	4 1/4"
110.0	4'-6"	4 1/4"	4 1/4"
115.0	4'-5"	4 1/4"	4 1/4"
120.0	4'-4"	4 1/4"	4 1/4"
125.0	4'-3"	4 1/4"	4 1/4"
130.0	4'-2"	4 1/4"	4 1/4"
135.0	4'-1"	4 1/4"	4 1/4"
140.0	4'-0"	3 1/8"	3 1/8"

* SPANS VALID FOR EVERY INSTALLATION LOCATED AT ANY ELEVATION OF BUILDING MEASURED AT BOTTOM OF SHUTTER. MINIMUM SEPARATION TO GLASS FOR SINGLE AND MULTIPLE UNITS SHALL BE MEASURED FROM BACK OF SLAT TO GLASS.

** MINIMUM SEPARATION TO GLASS FOR SHUTTERS INSTALLED WITHIN THE FIRST 30'-0" ELEVATION OF BUILDING AND MAXIMUM SPAN. SEE CHART #2 FOR Min. SEPARATION TO GLASS FOR SPANS LESS THAN THE Max. ALLOWED.

*** MINIMUM SEPARATION TO GLASS FOR SHUTTERS INSTALLED ABOVE 30'-0" ELEVATION OF BUILDING, MEASURED AT BOTTOM OF SHUTTER.

▲ MIN. SEPARATION TO GLASS FOR WIND ZONES 1, 2 & 3 IS 1" AND AS SHOWN ON CHARTS #1 & #2 FOR WIND ZONE 4, PER ASTM E 1996.

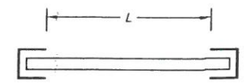

SINGLE SPAN

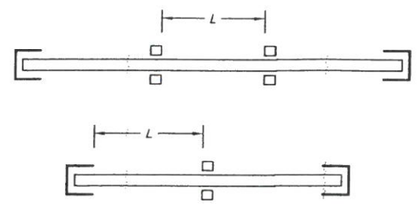

MULTIPLE SPAN

SPAN LAYOUT

SLAT PERFORMANCE CHART #2, MAXIMUM A.S.D. DESIGN PRESSURE RATING (psf) AND REQUIRED MINIMUM SEPARATION TO GLASS FOR A GIVEN SLAT SPAN "L" (ft)

(USE MAXIMUM VALUES BETWEEN POSITIVE AND NEGATIVE A.S.D. LOAD)

MAXIMUM A.S.D. DESIGN PRESSURE RATING (p.s.f.)	MAXIMUM SLAT SPAN "L" (ft)	MINIMUM SEPARATION TO GLASS (in) ▲	
		SINGLE & MULTIPLE UNIT **	SINGLE & MULTIPLE UNIT ***
40 OR LESS	6'-0"	4 5/8"	4 5/8"
	5'-0"	4 1/4"	2 3/4"
	4'-0" OR LESS	3 1/8"	1 3/4"
>40 TO 50	6'-0"	5 1/2"	5 1/2"
	5'-0"	4 1/4"	3 3/16"
	4'-0" OR LESS	3 1/8"	2"
>50 TO 65	5'-6"	5 3/16"	5 3/16"
	5'-0"	4 1/4"	3 7/8"
	4'-0" OR LESS	3 1/8"	2 3/16"
>65 TO 80	5'-0"	4 1/2"	4 1/2"
	4'-0" OR LESS	3 1/8"	2 7/16"
>80 TO 100	5'-0"	5 3/8"	5 3/8"
	4'-0" OR LESS	3 1/8"	2 5/8"
>100 TO 120	4'-6"	4 1/4"	4 3/16"
	4'-0" OR LESS	3 1/8"	3"
>120 TO 130	4'-0"	3 1/8"	3 1/8"
	3'-0" OR LESS	3 1/8"	1 3/4"
>130 TO 140	3'-6"	3 1/8"	2 1/2"
	3'-0" OR LESS	3 1/8"	1 3/4"

NON END RETENTION SYSTEM

TEXAS DEPARTMENT OF INSURANCE – 2006

7/22/15

P.E. SEAL/SIGNATURE/DATE

WALTER A. TILLIT Jr. P.E.
PROFESSIONAL ENGINEER

6355 N.W. 36th. St., Ste. 305
VIRGINIA GARDENS, Fl. 33166
Phone : (305) 871-1530 , Fax : (305) 871-1531

TEXAS LIC. # 90691
FIRM REGISTRATION # F-13790

58mm ER & NER SLAT BERTHA IMPACT PROTECTIVE ROLLING SYSTEM

AMERICAN SHUTTER SYSTEMS ASSOC., INC.
4268 WESTROADS DRIVE
WEST PALM BEACH, FL. 33407
PHONE: (877)999-2772 FAX: (561)209-8380

REV. No	DESCRIPTION	DATE	REV. No	DESCRIPTION	DATE
1	–	–	3	–	
2	–	–	4	–	

DRAWN BY: F.R.L.

07/15/15 DATE

15-248 DRAWING No

SHEET 24 OF 27

STORM BAR LOADING CHART
MAXIMUM A.S.D. DESIGN PRESSURE RATING (p. s. f.) AND CORRESPONDING MAXIMUM SPAN "L" FOR A GIVEN TYPE OF STORM BAR AND STORM BAR SPACING.

(USE MAXIMUM VALUES BETWEEN POSITIVE AND NEGATIVE A.S.D. LOAD)

MAXIMUM A.S.D. DESIGN PRESSURE RATING (p.s.f.)	TYPE 1 STORM BAR 2" x 2" x 1/4" (O)					TYPE 2 STORM BAR 2" x 3" x 1/8" (P)				
	* STORM BAR SPACING					* STORM BAR SPACING				
	⩽ 3'-0"	3' TO 4'	4' TO 5'	5' TO 6'	6' TO 6.5'	⩽ 3'-0"	3' TO 4'	4' TO 5'	5' TO 6'	6' TO 6.5'
40 OR LESS	7'-7"	7'-1"	6'-9"	6'-2"	5'-11"	8'-0"	7'-9"	6'-11"	6'-4"	6'-1"
45	7'-5"	6'-11"	6'-4"	5'-10"	5'-7"	8'-0"	7'-4"	6'-7"	6'-0"	5'-9"
50	7'-3"	6'-9"	6'-0"	5'-6"	5'-4"	8'-0"	7'-0"	6'-3"	5'-8"	5'-6"
55	7'-0"	6'-5"	5'-9"	5'-3"	—	7'-8"	6'-8"	5'-6"	5'-6"	—
60	6'-11"	6'-2"	5'-6"	5'-0"	—	7'-4"	6'-4"	5'-8"	5'-2"	—
65	6'-9"	5'-11"	5'-4"	4'-10"	—	7'-1"	6'-1"	5'-5"	5'-0"	—
70	6'-7"	5'-8"	5'-1"	4'-8"	—	6'-10"	5'-11"	5'-3"	4'-10"	—
75	6'-4"	5'-6"	4'-11"	4'-6"	—	6'-7"	5'-8"	5'-1"	4'-8"	—
80	6'-2"	5'-4"	4'-9"	4'-4"	—	6'-4"	5'-6"	4'-11"	4'-6"	—
85	6'-0"	5'-2"	4'-8"	4'-3"	—	6'-2"	5'-4"	4'-9"	4'-4"	—
90	5'-10"	5'-0"	4'-6"	4'-1"	—	6'-0"	5'-2"	4'-8"	4'-3"	—
95	5'-8"	4'-11"	4'-5"	4'-0"	—	5'-10"	5'-1"	4'-6"	4'-1"	—
100	5'-6"	4'-9"	4'-3"	3'-11"	—	5'-8"	4'-11"	4'-5"	4'-0"	—
105	5'-5"	4'-8"	4'-2"	3'-10"	—	5'-7"	4'-10"	4'-4"	3'-11"	—
110	5'-3"	4'-7"	4'-1"	—	—	5'-5"	4'-8"	4'-2"	—	—
115	5'-2"	4'-5"	4'-0"	—	—	5'-4"	4'-7"	4'-1"	—	—
120	5'-0"	4'-4"	3'-11"	—	—	5'-2"	4'-6"	4'-0"	—	—
125	4'-11"	4'-3"	3'-10"	—	—	5'-1"	4'-5"	3'-11"	—	—
130	4'-10"	4'-2"	3'-9"	—	—	5'-0"	4'-4"	3'-10"	—	—
135	4'-9"	4'-1"	3'-8"	—	—	4'-11"	4'-3"	3'-9"	—	—
140	4'-8"	4'-0"	3'-7"	—	—	4'-10"	4'-2"	3'-9"	—	—

MAXIMUM A.S.D. DESIGN PRESSURE RATING (p.s.f.)	TYPE 3 STORM BAR 2" x 4" x 1/8" (Q)					TYPE 4 STORM BAR 2" x 4" x .250" (R)				
	* STORM BAR SPACING					* STORM BAR SPACING				
	⩽ 3'-0"	3' TO 4'	4' TO 5'	5' TO 6'	6' TO 6.5'	⩽ 3'-0"	3' TO 4'	4' TO 5'	5' TO 6'	6' TO 6.5'
40 OR LESS	10'-0"	9'-6"	8'-6"	7'-9"	7'-5"	11'-10"	11'-0"	10'-5"	9'-11"	9'-9"
45	9'-11"	8'-11"	8'-0"	7'-4"	7'-0"	11'-6"	10'-8"	10'-1"	9'-8"	9'-4"
50	9'-8"	8'-6"	7'-7"	6'-11"	6'-8"	11'-2"	10'-5"	9'-10"	9'-2"	8'-10"
55	9'-4"	8'-1"	7'-3"	6'-7"	—	10'-11"	10'-2"	9'-7"	8'-9"	—
60	8'-11"	7'-9"	6'-11"	6'-4"	—	10'-8"	9'-11"	9'-2"	8'-5"	—
65	8'-7"	7'-5"	6'-8"	6'-1"	—	10'-6"	9'-9"	8'-10"	8'-1"	—
70	8'-3"	7'-2"	6'-5"	5'-10"	—	10'-4"	9'-6"	8'-6"	7'-9"	—
75	8'-0"	6'-11"	6'-2"	5'-8"	—	10'-1"	9'-2"	8'-3"	7'-6"	—
80	7'-9"	6'-9"	6'-0"	5'-6"	—	9'-11"	8'-11"	7'-11"	7'-3"	—
85	7'-6"	6'-6"	5'-10"	5'-4"	—	9'-10"	8'-7"	7'-9"	7'-0"	—
90	7'-4"	6'-4"	5'-8"	5'-2"	—	9'-8"	8'-5"	7'-6"	6'-10"	—
95	7'-1"	6'-2"	5'-6"	5'-0"	—	9'-5"	8'-2"	7'-4"	6'-8"	—
100	6'-11"	6'-0"	5'-4"	4'-11"	—	9'-2"	7'-11"	7'-1"	6'-6"	—
105	6'-9"	5'-10"	5'-3"	4'-9"	—	8'-11"	7'-9"	6'-11"	6'-4"	—
110	6'-7"	5'-9"	5'-1"	—	—	8'-9"	7'-7"	6'-9"	—	—
115	6'-6"	5'-7"	5'-0"	—	—	8'-7"	7'-5"	6'-8"	—	—
120	6'-4"	5'-6"	4'-11"	—	—	8'-5"	7'-3"	6'-6"	—	—
125	6'-2"	5'-4"	4'-10"	—	—	8'-3"	7'-1"	6'-4"	—	—
130	6'-1"	5'-3"	4'-9"	—	—	8'-1"	7'-0"	6'-3"	—	—
135	6'-0"	5'-2"	4'-7"	—	—	7'-11"	6'-10"	6'-1"	—	—
140	5'-10"	5'-1"	4'-6"	—	—	7'-9"	6'-9"	6'-0"	—	—

MAXIMUM A.S.D. DESIGN PRESSURE RATING (p.s.f.)	TYPE 5 STORM BAR (2) 2" x 4" x .250" (2R)				
	* STORM BAR SPACING				
	⩽ 3'-0"	3' TO 4'	4' TO 5'	5' TO 6'	6' TO 6.5'
40 OR LESS	14'-1"	13'-1"	12'-5"	11'-10"	11'-7"
45	13'-8"	12'-9"	12'-0"	11'-6"	11'-3"
50	13'-4"	12'-5"	11'-9"	11'-2"	11'-0"
55	13'-0"	12'-1"	11'-5"	10'-11"	—
60	12'-9"	11'-10"	11'-2"	10'-8"	—
65	12'-6"	11'-7"	11'-0"	10'-6"	—
70	12'-3"	11'-5"	10'-9"	10'-4"	—
75	12'-0"	11'-2"	10'-7"	10'-1"	—
80	11'-10"	11'-0"	10'-5"	9'-11"	—
85	11'-8"	10'-10"	10'-3"	9'-10"	—
90	11'-6"	10'-8"	10'-1"	9'-8"	—
95	11'-4"	10'-7"	10'-0"	9'-5"	—
100	11'-2"	10'-5"	9'-10"	9'-2"	—
105	11'-1"	10'-4"	9'-9"	8'-11"	—
110	10'-11"	10'-2"	9'-7"	—	—
115	10'-10"	10'-1"	9'-4"	—	—
120	10'-8"	9'-11"	9'-2"	—	—
125	10'-7"	9'-10"	9'-0"	—	—
130	10'-6"	9'-9"	8'-10"	—	—
135	10'-5"	9'-8"	8'-8"	—	—
140	10'-4"	9'-6"	8'-6"	—	—

* STORM BAR SPACING SHALL BE SUCH THAT MAXIMUM SLAT SPAN SHALL NOT BE EXCEEDED.

NON END RETENTION SYSTEM

TEXAS DEPARTMENT OF INSURANCE – 2006

7/22/15

P.E. SEAL/SIGNATURE/DATE

WALTER A. TILLIT Jr. P.E.
PROFESSIONAL ENGINEER

6355 N.W. 36th. St., Ste. 305
VIRGINIA GARDENS, Fl. 33166
Phone : (305) 871-1530 , Fax : (305) 871-1531

TEXAS LIC. # 90691
FIRM REGISTRATION # F-13790

58mm ER & NER SLAT BERTHA IMPACT PROTECTIVE ROLLING SYSTEM

AMERICAN SHUTTER SYSTEMS ASSOC., INC.
4268 WESTROADS DRIVE
WEST PALM BEACH, FL. 33407
PHONE: (877)999-2772 FAX: (561)209-8380

REV. No	DESCRIPTION	DATE	REV. No	DESCRIPTION	DATE
1	–	–	3	–	
2	–	–	4	–	

DRAWN BY: F.R.L.

07/15/15 DATE

15-248 DRAWING No

SHEET 25 OF 27

HEADER LOADING CHART MAXIMUM A.S.D. DESIGN PRESSURE RATING (psf) AND CORRESPONDING MAXIMUM SPAN "L" FOR A GIVEN TYPE OF HEADER.

(USE MAXIMUM VALUES BETWEEN POSITIVE AND NEGATIVE A.S.D. LOAD)

MAXIMUM A.S.D. DESIGN PRESSURE RATING (p.s.f.)	TYPE 1 HEADER (S) 2" x 3" x 1/8"		TYPE 2 HEADER (T) 2" x 4" x 1/8"			TYPE 3 HEADER (U) 2" x 4" x 1/4"					TYPE 4 HEADER (V) 2" x 6" x 1/8"				
	STORM BAR HEIGHT		STORM BAR HEIGHT			STORM BAR HEIGHT					STORM BAR HEIGHT				
	⩽ 5'-0"	5' TO 7'	⩽ 5'-0"	5' TO 8'	8' TO 10'	⩽ 6'-0"	6' TO 8'	8' TO 10'	10' TO 12'	12' TO 14'	⩽ 6'-0"	6' TO 8'	8' TO 10'	10' TO 12'	12' TO 14'
40.0 OR LESS	9'-11"	8'-4"	12'-2"	9'-8"	8'-8"	14'-10"	12'-10"	11'-6"	10'-6"	9'-9"	15'-1"	13'-1"	11'-8"	10'-8"	9'-11"
45.0	9'-4"	7'-11"	11'-6"	9'-1"	8'-2"	14'-0"	12'-2"	10'-10"	9'-11"	9'-2"	14'-3"	12'-4"	11'-0"	10'-1"	9'-4"
50.0	8'-10"	7'-6"	10'-11"	8'-8"	7'-9"	13'-4"	11'-6"	10'-4"	9'-5"	8'-8"	13'-6"	11'-8"	10'-6"	9'-7"	8'-10"
55.0	8'-5"	7'-2"	10'-5"	8'-3"	7'-4"	12'-8"	11'-0"	9'-10"	9'-0"	8'-4"	12'-11"	11'-2"	10'-0"	9'-1"	8'-5"
60.0	8'-1"	6'-10"	10'-0"	7'-11"	7'-1"	12'-2"	10'-6"	9'-5"	9'-7"	7'-11"	12'-4"	10'-8"	9'-7"	8'-9"	8'-1"
65.0	7'-9"	6'-7"	9'-7"	7'-7"	6'-9"	11'-8"	10'-1"	9'-0"	8'-3"	7'-8"	11'-10"	10'-3"	9'-2"	8'-5"	7'-9"
70.0	7'-6"	6'-4"	9'-3"	7'-4"	6'-6"	11'-3"	9'-9"	8'-8"	7'-11"	7'-4"	11'-5"	9'-11"	8'-10"	8'-1"	7'-6"
75.0	7'-3"	6'-1"	8'-11"	7'-1"	6'-4"	10'-10"	9'-5"	8'-5"	7'-8"	7'-1"	11'-0"	9'-7"	8'-7"	7'-10"	7'-3"
80.0	7'-0"	5'-11"	8'-8"	6'-10"	6'-1"	10'-6"	9'-1"	8'-2"	7'-5"	6'-11"	10'-8"	9'-3"	8'-3"	7'-7"	7'-0"
85.0	6'-9"	5'-9"	8'-5"	6'-7"	5'-11"	10'-2"	8'-10"	7'-11"	7'-3"	6'-8"	10'-4"	9'-0"	8'-0"	7'-4"	6'-9"
90.0	6'-7"	5'-7"	8'-2"	6'-5"	5'-9"	9'-11"	8'-7"	7'-8"	7'-0"	6'-6"	10'-1"	8'-9"	7'-10"	7'-1"	6'-7"
95.0	6'-5"	5'-5"	7'-11"	6'-3"	5'-7"	9'-8"	8'-4"	7'-6"	6'-10"	6'-4"	9'-10"	8'-6"	7'-7"	6'-11"	6'-5"
100.0	6'-3"	5'-3"	7'-9"	6'-1"	5'-6"	9'-5"	8'-2"	7'-3"	6'-8"	6'-2"	9'-7"	8'-3"	7'-5"	6'-9"	6'-3"
105.0	6'-1"	5'-2"	7'-6"	6'-0"	5'-4"	9'-2"	7'-11"	7'-1"	6'-6"	6'-0"	9'-4"	8'-1"	7'-3"	6'-7"	6'-1"
110.0	6'-0"	5'-1"	7'-4"	5'-10"	5'-2"	9'-0"	7'-9"	6'-11"	6'-4"	5'-10"	9'-1"	7'-11"	7'-1"	6'-5"	6'-0"
115.0	5'-10"	4'-11"	7'-2"	5'-8"	5'-1"	8'-9"	7'-7"	6'-9"	6'-2"	5'-9"	8'-11"	7'-9"	6'-11"	6'-4"	5'-10"
120.0	5'-9"	4'-10"	7'-1"	5'-7"	5'-0"	8'-7"	7'-5"	6'-8"	6'-1"	5'-7"	8'-9"	7'-7"	6'-9"	6'-2"	5'-9"
125.0	5'-7"	4'-9"	6'-11"	5'-6"	4'-11"	8'-5"	7'-3"	6'-6"	5'-11"	5'-6"	8'-7"	7'-5"	6'-7"	6'-1"	5'-7"
130.0	5'-6"	4'-8"	6'-9"	5'-4	4'-9"	8'-3"	7'-2"	6'-5"	5'-10"	5'-5"	8'-5"	7'-3"	6'-6"	5'-11"	5'-6"
135.0	5'-5"	4'-7"	6'-8"	5'-3"	4'-8"	8'-1"	7'-0"	6'-3"	5'-9"	5'-4"	8'-3"	7'-1"	6'-4"	5'-10"	5'-5"
140.0	5'-3"	4'-6"	6'-6"	5'-2"	4'-7"	7'-11"	6'-11"	6'-2"	5'-7"	5'-2"	8'-1"	7'-0"	6'-3"	5'-9"	5'-3"

NON END RETENTION SYSTEM

TEXAS DEPARTMENT OF INSURANCE – 2006

7/23/15

P.E. SEAL/SIGNATURE/DATE

WALTER A. TILLIT Jr. P.E.
PROFESSIONAL ENGINEER

6355 N.W. 36th. St., Ste. 305
VIRGINIA GARDENS, Fl. 33166
Phone : (305) 871-1530 , Fax : (305) 871-1531

TEXAS LIC. # 90691
FIRM REGISTRATION # F-13790

58mm ER & NER SLAT BERTHA IMPACT PROTECTIVE ROLLING SYSTEM

AMERICAN SHUTTER SYSTEMS ASSOC., INC.
4268 WESTROADS DRIVE
WEST PALM BEACH, FL. 33407
PHONE: (877)999-2772 FAX: (561)209-8380

REV. No	DESCRIPTION	DATE	REV. No	DESCRIPTION	DATE
1	–	–	3	–	
2	–	–	4	–	

DRAWN BY: F.R.L.

07/15/15 DATE

15-248 DRAWING No

MULLION LOADING CHART MAXIMUM A.S.D. DESIGN PRESSURE RATING (psf) AND CORRESPONDING MAXIMUM SPAN "L"(Ft) FOR A GIVEN TYPE OF MULLION AND MULLION SPACING (Ft.).

(USE MAXIMUM VALUES BETWEEN POSITIVE AND NEGATIVE A.S.D. LOAD)

MAXIMUM A.S.D. DESIGN PRESSURE RATING (p.s.f.)	TYPE 1 MULLION (K) 3" x 4" x 1/8"				TYPE 2 MULLION (L) 4" x 4" x 1/4"				TYPE 3 MULLION (M) 4" x 6" x 1/4"					
	MULLION SPACING				MULLION SPACING				MULLION SPACING					
	≤ 4'-0"	4' TO 5'	5' TO 6'	6' TO 8'	≤ 4'-0"	4' TO 5'	5' TO 6'	6' TO 8'	≤ 4'-0"	4' TO 5'	5' TO 6'	6' TO 8'	8' TO 10'	10' TO 12'
40.0 OR LESS	9'-0"	8'-4"	7'-10"	8'-2"	11'-9"	10'-11"	10'-3"	10'-9"	16'-4"	15'-2"	14'-3"	14'-10"	13'-10"	13'-0"
45.0	8'-8"	8'-0"	7'-7"	7'-10"	11'-4"	10'-6"	9'-11"	10'-4"	15'-8"	14'-7"	13'-8"	14'-4"	13'-3"	12'-6"
50.0	8'-4"	7'-9"	7'-3"	7'-7"	10'-11"	10'-2"	9'-7"	10'-0"	15'-2"	14'-1"	13'-3"	13'-10"	12'-10"	12'-1"
55.0	8'-1"	7'-6"	7'-1"	7'-4"	10'-7"	9'-10"	9'-3"	9'-8"	14'-8"	13'-7"	12'-10"	13'-4"	12'-5"	11'-8"
60.0	7'-10"	7'-3"	6'-10"	7'-2"	10'-3"	9'-7"	9'-0"	9'-5"	14'-3"	13'-3"	12'-5"	13'-0"	12'-1"	11'-4"
65.0	7'-8"	7'-1"	6'-8"	7'-0"	10'-0"	9'-4"	8'-9"	9'-2"	13'-11"	12'-11"	12'-2"	12'-8"	11'-9"	11'-1"
70.0	7'-5"	6'-11"	6'-6"	6'-10"	9'-9"	9'-1"	8'-6"	8'-11"	13'-7"	12'-7"	11'-10"	12'-4"	11'-5"	10'-9"
75.0	7'-3"	6'-9"	6'-4"	6'-8"	9'-7"	8'-10"	8'-4"	8'-8"	13'-3"	12'-3"	11'-7"	12'-1"	11'-2"	10'-6"
80.0	7'-2"	6'-7"	6'-3"	6'-6"	9'-4"	8'-8"	8'-2"	8'-6"	12'-11"	12'-0"	11'-4"	11'-10"	10'-11"	10'-4"
85.0	7'-0"	6'-6"	6'-1"	6'-4"	9'-2"	8'-6"	8'-0"	8'-4"	12'-8"	11'-9"	11'-1"	11'-7"	10'-9"	10'-1"
90.0	6'-10"	6'-4"	6'-0"	6'-3"	9'-0"	8'-4"	7'-10"	8'-2"	12'-5"	11'-7"	10'-11"	11'-4"	10'-6"	9'-11"
95.0	6'-9"	6'-3"	5'-10"	6'-2"	8'-10"	8'-2"	7'-9"	8'-1"	12'-3"	11'-4"	10'-8"	11'-2"	10'-4"	9'-9"
100.0	6'-7"	6'-2"	5'-9"	6'-0"	8'-8"	8'-1"	7'-7"	7'-11"	12'-0"	11'-2"	10'-6"	10'-11"	10'-2"	9'-7"
105.0	6'-6"	6'-1"	5'-7"	5'-11"	8'-6"	7'-11"	7'-6"	7'-9"	11'-10"	11'-0"	10'-4"	10'-9"	—	—
110.0	6'-5"	5'-11"	5'-5"	5'-10"	8'-5"	7'-10"	7'-4"	7'-8"	11'-8"	10'-10"	10'-2"	10'-7"	—	—
115.0	6'-4"	5'-10"	5'-4"	5'-8"	8'-3"	7'-8"	7'-3"	7'-7"	11'-6"	10'-8"	10'-0"	10'-5"	—	—
120.0	6'-3"	5'-9"	5'-3"	5'-7"	8'-2"	7'-7"	7'-2"	7'-5"	11'-4"	10'-6"	9'-11"	10'-4"	—	—
125.0	6'-2"	5'-7"	5'-1"	5'-5"	8'-1"	7'-6"	7'-0"	7'-4"	11'-2"	10'-4"	9'-9"	10'-2"	—	—
130.0	6'-1"	5'-6"	5'-0"	5'-4"	7'-11"	7'-5"	6'-11"	7'-3"	11'-0"	10'-3"	9'-8"	10'-0"	—	—
135.0	6'-0"	5'-5"	4'-11"	5'-3"	7'-10"	7'-3"	6'-10"	7'-2"	10'-11"	10'-1"	9'-6"	9'-11"	—	—
140.0	5'-11"	5'-3"	4'-10"	5'-2"	7'-9"	7'-2"	6'-9"	7'-1"	10'-9"	10'-0"	9'-5"	9'-10"	—	—

NOTES : REFER TO ELEVATIONS ON SHEET 17 OF 27

1-. FOR MULLIONS INSTALLED W/O STORM BARS

A) MULLION SPACING SHALL BE SUCH THAT MAXIMUM SLAT SPAN SHALL NOT BE EXCEEDED

2-. FOR MULLIONS INSTALLED W/ STORM BARS & HEADERS

A) MULLION SPACING SHALL BE SUCH THAT MAXIMUM HEADER SPAN SHALL NOT BE EXCEEDED

B) STORM BAR SPACING SHALL BE SUCH THAT MAXIMUM SLAT SPAN SHALL NOT BE EXCEEDED

NON END RETENTION SYSTEM

TEXAS DEPARTMENT OF INSURANCE – 2006

7/22/15

P.E. SEAL/SIGNATURE/DATE

WALTER A. TILLIT Jr. P.E.
PROFESSIONAL ENGINEER

6355 N.W. 36th. St., Ste. 305
VIRGINIA GARDENS, Fl. 33166
Phone : (305) 871-1530 , Fax : (305) 871-1531

TEXAS LIC. # 90691
FIRM REGISTRATION # F-13790

58mm ER & NER SLAT BERTHA IMPACT PROTECTIVE ROLLING SYSTEM

AMERICAN SHUTTER SYSTEMS ASSOC., INC.
4268 WESTROADS DRIVE
WEST PALM BEACH, FL. 33407
PHONE: (877)999-2772 FAX: (561)209-8380

REV. No	DESCRIPTION	DATE	REV. No	DESCRIPTION	DATE
1	–	–	3	–	
2	–	–	4	–	

DRAWN BY: F.R.L.

07/15/15 DATE

15-248 DRAWING No

SHEET 27 OF 27