MAESTROSHIELD ALUMINUM ROLL-UP SHUTTER

WITH END RETENTION OR NON-END RETENTION SLATS AND RAILS

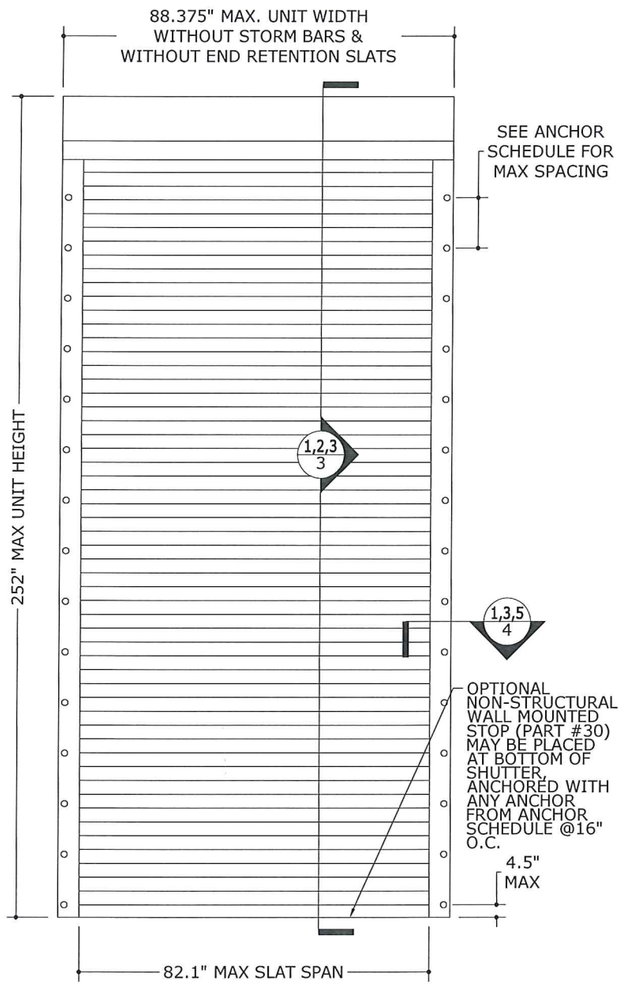

1/1 NON-END RETENTION SHUTTER W/O STORM BARS

N.T.S. EXTERIOR ELEV

TABLE 1
NON-END RETENTION
NO STORM BARS

SLAT SPAN	ALLOWABLE DESIGN PRESSURE
47.1"	+/- 120.0 PSF
50.0"	+/- 104.2 PSF
55.0"	+/- 83.1 PSF
60.0"	+/- 67.3 PSF
65.0"	+/- 55.2 PSF
70.0"	+/- 45.7 PSF
75.0"	+/- 38.2 PSF
80.0"	+/- 32.2 PSF
82.1"	+/- 30.0 PSF

TABLE 2
W/ END RETENTION
NO STORM BARS

SLAT SPAN	ALLOWABLE DESIGN PRESSURE
116.7"	+/- 80.0 PSF
120.0"	+/- 78.2 PSF
130.0"	+/- 73.6 PSF
140.0"	+/- 70.0 PSF
150.0"	+/- 66.9 PSF
160.0"	+/- 64.3 PSF
170.0"	+/- 62.1 PSF
180.0"	+/- 60.1 PSF
190.0"	+/- 58.3 PSF
200.0"	+/- 56.8 PSF
210.0"	+/- 55.3 PSF
220.0"	+/- 54.0 PSF
230.0"	+/- 52.8 PSF
240.0"	+/- 51.7 PSF
250.0"	+/- 50.6 PSF
256.5"	+/- 50.0 PSF

TABLE 1 & 2 NOTES:

- SLAT SPAN IS DEFINED AS THE DISTANCE BETWEEN RAILS FOR SINGLE SPAN ASSEMBLIES.
- LINEAR INTERPOLATION BETWEEN SHUTTER SPANS IS NOT PERMITTED. FOR SPANS BETWEEN THOSE INDICATED ABOVE, THE DESIGN PRESSURES FOR THE NEXT HIGHER SPAN SHALL BE USED.

TABLE 3
MINIMUM GLAZING SEPARATION
NON-END RETENTION (WIND ZONE 4 ONLY)

SLAT SPAN	INSTALLATIONS ≤ 30' ABOVE GRADE	INSTALLATIONS > 30' ABOVE GRADE
47.1"	3.1"	2.7"
50.0"	3.1"	2.8"
55.0"	3.1"	3.1"
60.0"	3.5"	3.5"
65.0"	3.8"	3.8"
70.0"	4.2"	4.2"
75.0"	4.6"	4.6"
80.0"	5.0"	5.0"
82.1"	5.1"	5.1"

TABLE 4
MINIMUM GLAZING SEPARATION
W/ END RETENTION (WIND ZONE 4 ONLY)

SLAT SPAN	INSTALLATIONS ≤ 30' ABOVE GRADE	INSTALLATIONS > 30' ABOVE GRADE
116.7"	15.1"	8.9"
120.0"	20.7"	9.2"
130.0"	20.7"	9.9"
140.0"	20.7"	10.6"
150.0"	20.7"	11.3"
160.0"	20.7"	12.0"
170.0"	20.7"	12.8"
180.0"	20.7"	13.5"
190.0"	20.7"	14.3"
200.0"	20.7"	15.1"
210.0"	20.7"	15.9"
220.0"	20.7"	16.8"
230.0"	20.7"	17.6"
240.0"	20.7"	18.4"
250.0"	20.7"	19.3"
256.5"	20.7"	19.9"

TABLE 3 & 4 NOTES:

- SLAT SPAN IS DEFINED AS THE DISTANCE BETWEEN RAILS FOR SINGLE SPAN ASSEMBLIES
- SEPARATION FROM GLAZING IS REQUIRED **ONLY** IN ASTM WIND ZONE 4 AND ESSENTIAL FACILITIES.
- LINEAR INTERPOLATION BETWEEN SHUTTER SPANS IS NOT PERMITTED. FOR SPANS BETWEEN THOSE INDICATED ABOVE, THE SEPARATION FROM GLASS FOR THE NEXT HIGHER SPAN SHALL BE USED.

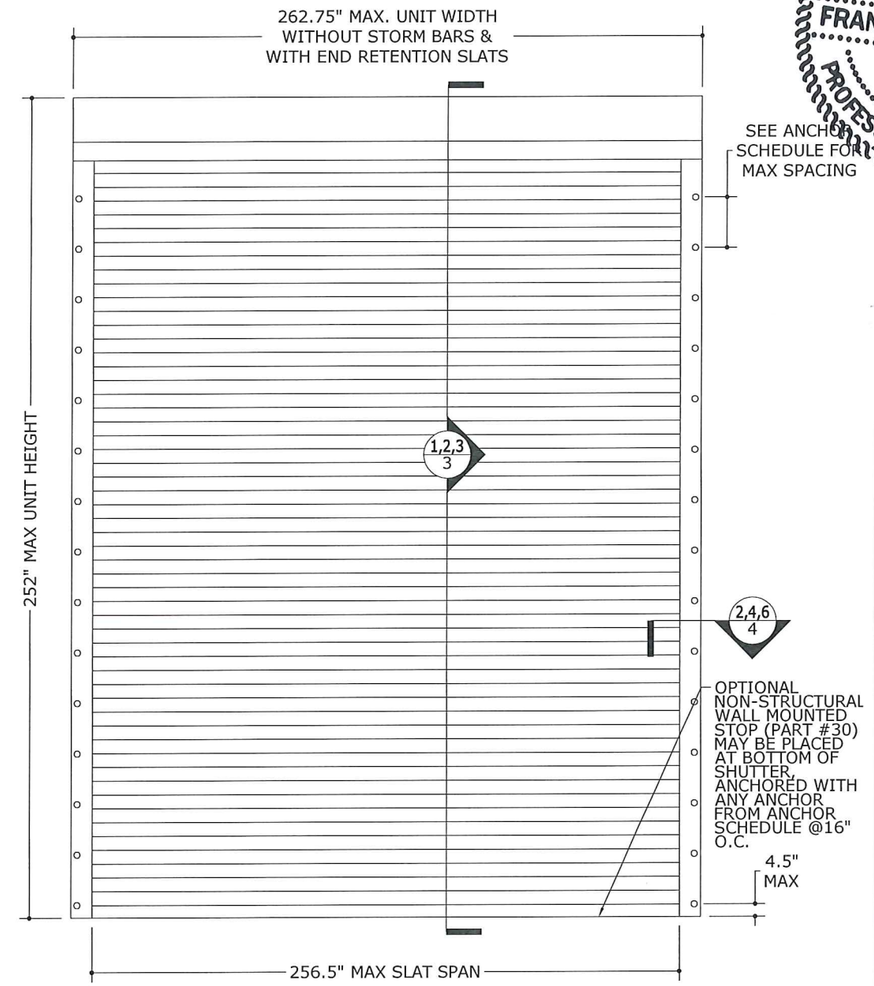

2/1 END RETENTION SHUTTER W/O STORM BARS

N.T.S. EXTERIOR ELEV

GENERAL NOTES

1. THE SYSTEM DESCRIBED HEREIN HAS BEEN DESIGNED AND TESTED IN ACCORDANCE WITH THE 2006 INTERNATIONAL BUILDING CODE WITH TEXAS REVISIONS EFFECTIVE JANUARY 1, 2008, PER ASTM E330, E1886, AND E1996 STANDARDS.
2. NO 33-1/3% INCREASE IN ALLOWABLE STRESS HAS BEEN USED IN THE DESIGN OF THIS SYSTEM. WIND LOAD DURATION FACTOR Cd=1.6 HAS BEEN USED FOR WOOD ANCHOR DESIGN.
3. POSITIVE AND NEGATIVE DESIGN PRESSURES CALCULATED FOR USE WITH THIS SYSTEM SHALL BE DETERMINED PER SEPARATE ENGINEERING IN ACCORDANCE WITH THE GOVERNING CODE. PRESSURE REQUIREMENTS AS DETERMINED IN ACCORDANCE WITH ASCE 7 SHALL BE LESS THAN OR EQUAL TO THE POSITIVE OR NEGATIVE DESIGN PRESSURE CAPACITY VALUES LISTED HEREIN FOR ANY ASSEMBLY AS SHOWN.
4. DESIGN PRESSURES NOTED HEREIN ARE BASED ON MAXIMUM TESTED PRESSURES DIVIDED BY A 1.5 SAFETY FACTOR.
5. THE SYSTEM DETAILED HEREIN IS GENERIC AND DOES NOT PROVIDE INFORMATION FOR A SPECIFIC SITE. FOR SITE CONDITIONS DIFFERENT FROM THE CONDITIONS DETAILED HEREIN, A LICENSED ENGINEER OR REGISTERED ARCHITECT SHALL PREPARE SITE SPECIFIC DOCUMENTS FOR USE IN CONJUNCTION WITH THIS DOCUMENT.
6. ROLL-UP MECHANISM AND HOOD ASSEMBLY ARE NOT PART OF THIS APPROVAL.
7. THIS DOCUMENT CONTAINS INFORMATION RELEVANT TO THE NECESSARY STRUCTURAL REQUIREMENTS OF THE SYSTEM INSTALLATION. COMPONENTS AND FASTENERS NOT REFERENCED WHICH ARE PART OF THE INTERNAL FABRICATION OF THE SPECIFIED SYSTEMS OR ASSEMBLIES SHALL BE PER MANUFACTURER PUBLISHED SPECIFICATIONS.
8. PERMIT HOLDER SHALL VERIFY THE ADEQUACY OF THE EXISTING STRUCTURE TO WITHSTAND SUPERIMPOSED LOADS. WOOD BUCKS (BY OTHERS) SHALL BE ANCHORED PROPERLY TO TRANSFER LOADS TO THE EXISTING STRUCTURE.
9. ALL EXTRUSIONS SHALL BE MINIMUM 6063-T5 ALUMINUM ALLOY, UNLESS NOTED OTHERWISE.
10. EACH SHUTTER ASSEMBLY SHALL BEAR A PERMANENT LABEL ON THE BOTTOM OF THE HOOD FACING THE EXTERIOR WITH THE FOLLOWING MINIMUM INFORMATION:
    TOWN & COUNTRY INDUSTRIES
    FORT LAUDERDALE, FL
    MISSILE LEVEL D - ASTM E1886, E1996 & E330
11. ALL BOLTS & WASHERS SHALL BE ZINC COATED STEEL, GALVANIZED STEEL, OR STAINLESS STEEL WITH A MINIMUM TENSILE YIELD STRENGTH OF 60 KSI. ALL ALUMINUM 3/16"Ø OR 1/4"Ø POP RIVETS SHALL HAVE A MINIMUM SHEAR ULTIMATE STRENGTH OF 42ksi.
12. ALL STEEL IN CONTACT WITH ALUMINUM SHALL BE PAINTED OR PLATED AS PRESCRIBED IN THE FLORIDA BUILDING CODE.

FRANK L. BENNARDO, P.E.
FL LIC. #36064
STATE OF TEXAS
02/18/2015
FRANK L. BENNARDO
LICENSED
PROFESSIONAL ENGINEER
FRANK L. BENNARDO, P.E.
160 SW 12th AVENUE
DEERFIELD BEACH, FL 33442
Ph: (954) 354-0660 FAX: (954) 354-0664
POWERED BY THE INNOVATIONS OF
ENGINEERS EXPRESS
EXPERIENCE MORE AT WWW.ENGEXP.COM

Town & Country INDUSTRIES
Wholesale Aluminum and Building Products
A Division of ABC Supply Co., Inc.
400 WEST MCNAB ROAD
FT. LAUDERDALE, FL 33309

REMARKS	DRWN	CHKD	DATE
INIT ISSUE	KL	FLB	05/30/13
REVISE RIVETS	CSL	TSB	02/09/14

THIS DOCUMENT IS THE PROPERTY OF FRANK L. BENNARDO, P.E AND SHALL NOT BE REPRODUCED IN WHOLE OR PART WITHOUT WRITTEN CONSENT OF FRANK L. BENNARDO, P.E. * ALTERATIONS, ADDITIONS, HIGHLIGHTING, OR OTHER MARKINGS TO THIS DOCUMENT ARE NOT PERMITTED AND INVALIDATE OUR CERTIFICATION.

COPYRIGHT FRANK L. BENNARDO P.E.

14-1765

SCALE: -

PAGE DESCRIPTION:
-
-

V:\Projects\14-1765 FL 14235 - Revise Rivet Locations for TDI 214-Resubmit Eval\WP\14-1765_a Maestroshield Roll-up.dwg
02/18/2015 - 11:11am

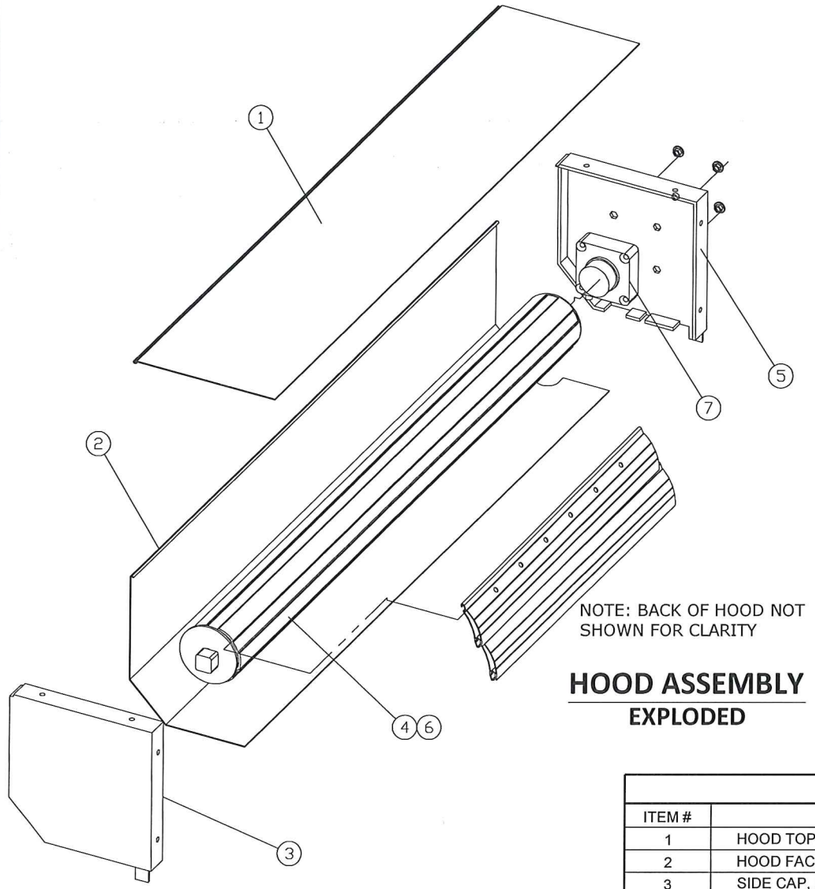

NOTE: BACK OF HOOD NOT SHOWN FOR CLARITY

HOOD ASSEMBLY
EXPLODED

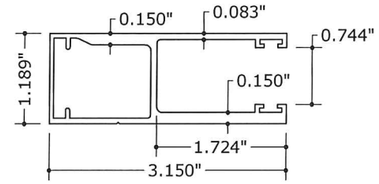

8 SIDE RAIL NON-END RETENTION
6" = 1'-0" 6063-T6 ALUM

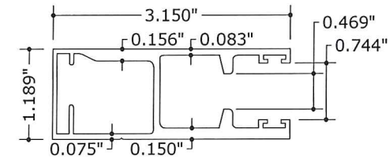

10 SIDE RAIL END RETENTION
6" = 1'-0" 6063-T6 ALUM

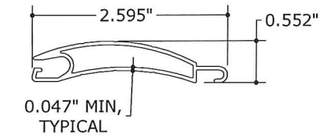

11 TYPICAL SLAT
6" = 1'-0" 6063-T6 ALUM

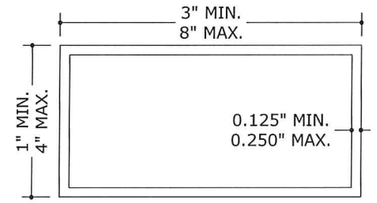

NOTE: SEE BILL OF MATERIALS (BOM) FOR TUBE SIZES AND MATERIALS

12-26 ALUMINUM TUBE
6" = 1'-0" MAT'L PER BOM

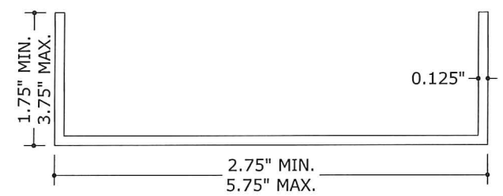

Fy = 30 ksi MINIMUM

27 STEEL REINFORCEMENT
6" = 1'-0" A36 GALV. STEEL OR STAINLESS STEEL

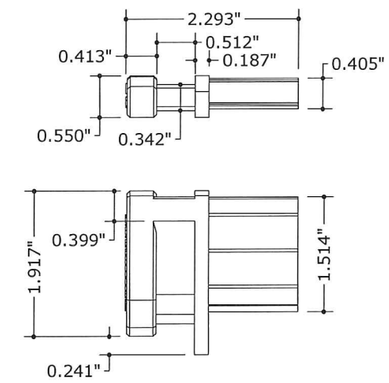

9 END RETENTION
6" = 1'-0" NYLON

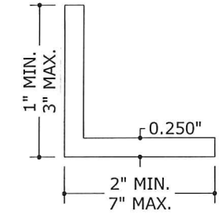

28 ALUMINUM ANGLE
6" = 1'-0" 6061-T6 OR 6005-T5 ALUM

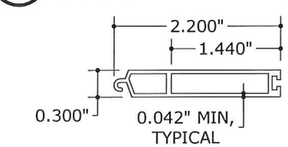

29 OPTIONAL BOTTOM SLAT
6" = 1'-0" 6063-T5 ALUM

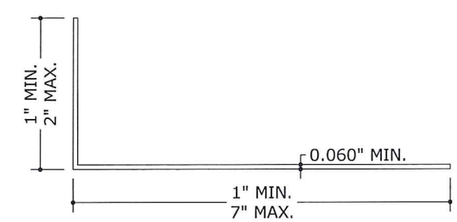

30 WALL MOUNTED STOP
6" = 1'-0" 6063-T6 ALUM

BILL OF MATERIALS

ITEM #	DESCRIPTION	MATERIAL
1	HOOD TOP	3105-H14 ALUM
2	HOOD FACE	3105-H14 ALUM
3	SIDE CAP, RIGHT	CAST ALUM
4	MOTOR TUBE, 60-88mm DIAMETER, 3mm THICK	6063-T5 ALUM
4	MOTOR TUBE, 60-100mm DIAMETER, 3mm THICK	GALV. STEEL
5	SIDE CAP, LEFT	CAST ALUM
6	IDLE BEARING	NYLON/STEEL
7	MANUAL GEAR OR ELECTRONIC MOTOR	
8	SIDE RAIL, NON-END RETENTION	6063-T6 MIN. ALUM
9	END RETENTION GUIDE	NYLON
10	SIDE RAIL, END RETENTION	6063-T6 ALUM
11	TYPICAL SLAT	6063-T6 ALUM
12	1"x3"x0.125" TUBE	6063-T6 ALUM
13	2"x3"x0.125" TUBE	6063-T6 ALUM
14	2"x4"x0.125" TUBE	6063-T6 ALUM
15	2"x5"x0.125" TUBE	6063-T6 ALUM
16	2"x3"x0.25" TUBE	6061-T6 OR 6005-T5 ALUM
17	2"x4"x0.25" TUBE	6061-T6 OR 6005-T5 ALUM
18	2"x5"x0.25" TUBE	6061-T6 OR 6005-T5 ALUM
19	2"x6"x0.125" TUBE	6063-T6 ALUM
20	2"x6"x0.25" TUBE	6061-T6 OR 6005-T5 ALUM
21	3"x3"x0.125" TUBE	6063-T6 ALUM
22	3"x3"x0.25" TUBE	6061-T6 OR 6005-T5 ALUM
23	4"x4"x0.125" TUBE	6063-T6 ALUM
24	4"x4"x0.25" TUBE	6061-T6 OR 6005-T5 ALUM
25	4"x6"x0.25" TUBE	6061-T6 OR 6005-T5 ALUM
26	4"x8"x0.25" TUBE	6061-T6 OR 6005-T5 ALUM
27	STEEL REINFORCEMENT (Fy = 30 ksi MIN.)	A36 OR STAINLESS STEEL
28	ALUMINUM ANGLE	6061-T6 OR 6005-T5 ALUM
29	OPTIONAL BOTTOM SLAT	6063-T5 ALUM
30	WALL MOUNTED STOP	6063-T6 ALUM

FRANK L. BENNARDO, P.E.
PE50064
STATE OF TEXAS
02/18/2015
FRANK L. BENNARDO
CERT OF REG. # F-11283
50064
LICENSED
PROFESSIONAL ENGINEER

FRANK L. BENNARDO, P.E.
160 SW 12th AVENUE
DEERFIELD BEACH, FL 33442
Ph: (954) 354-0660 FAX: (954) 354-0673
POWERED BY THE INNOVATIONS OF ENGINEERS EXPRESS
EXPERIENCE MORE AT WWW.ENGINEERSEXPRESS.COM

Town & Country INDUSTRIES
Wholesale Aluminum and Building Products
A Division of ABC Supply Co., Inc.
400 WEST MCNAB ROAD
FT. LAUDERDALE, FL 33309

REMARKS	DRWN	CHKD	DATE
INIT ISSUE	KL	FLB	05/30/13
REVISE RIVETS	CSL	TSB	02/09/14

THIS DOCUMENT IS THE PROPERTY OF FRANK L. BENNARDO, P.E AND SHALL NOT BE REPRODUCED IN WHOLE OR IN PART WITHOUT WRITTEN CONSENT OF FRANK L. BENNARDO, P.E. * ALTERATIONS, ADDITIONS, HIGHLIGHTING, OR OTHER MARKINGS TO THIS DOCUMENT ARE NOT PERMITTED AND INVALIDATE OUR CERTIFICATION.

COPYRIGHT FRANK L. BENNARDO P.E.

14-1765

SCALE: -

PAGE DESCRIPTION:
-
-

V:\Projects\14-1765 FL 14235 - Revise Rivet Locations for TDI 214-Resubmit Eval\\P\14-1765_a Maestroshield Roll-up.dwg
02/18/2015 - 11:12am

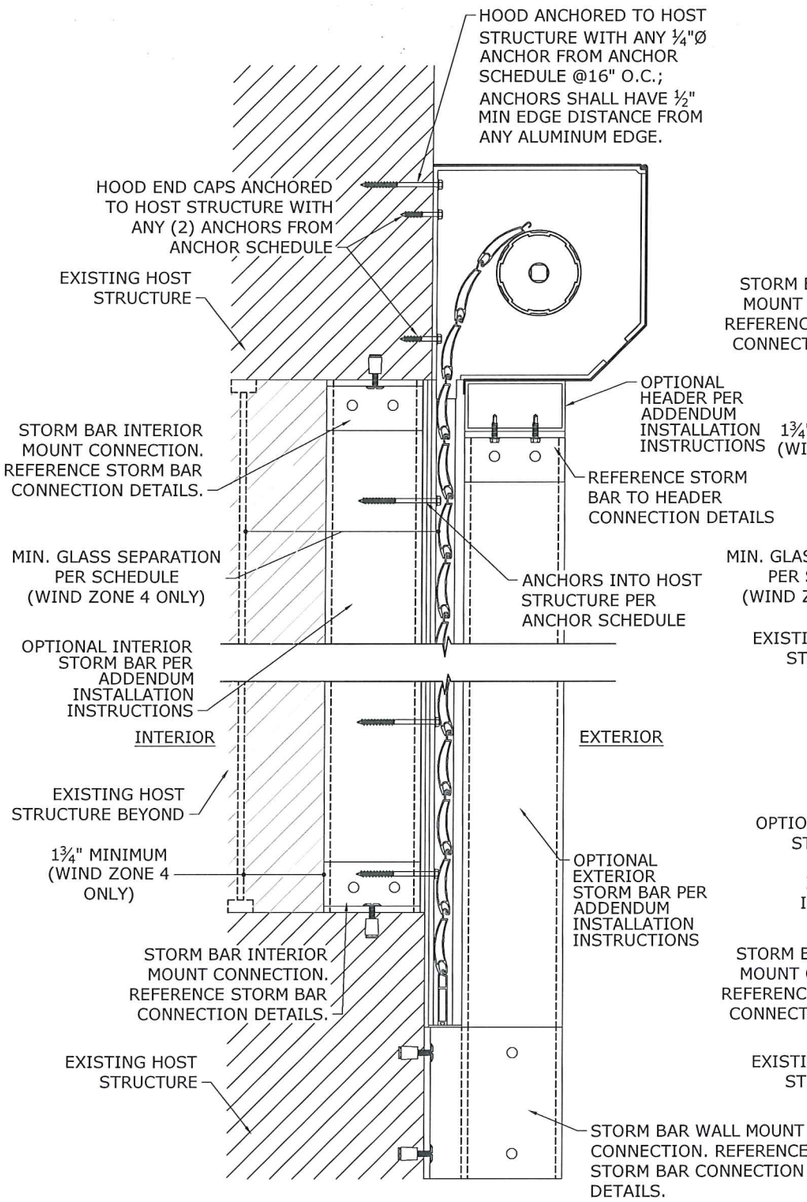

1 / 3 WALL MOUNT (SHOWN W/ OPTIONAL STORM BARS)

N.T.S. VERT SECTION

NOTE: FOR OPTIONAL MOUNTING CONDITIONS, REFERENCE ADDENDUM STORM BAR AND MULLION INSTALLATION INSTRUCTIONS.

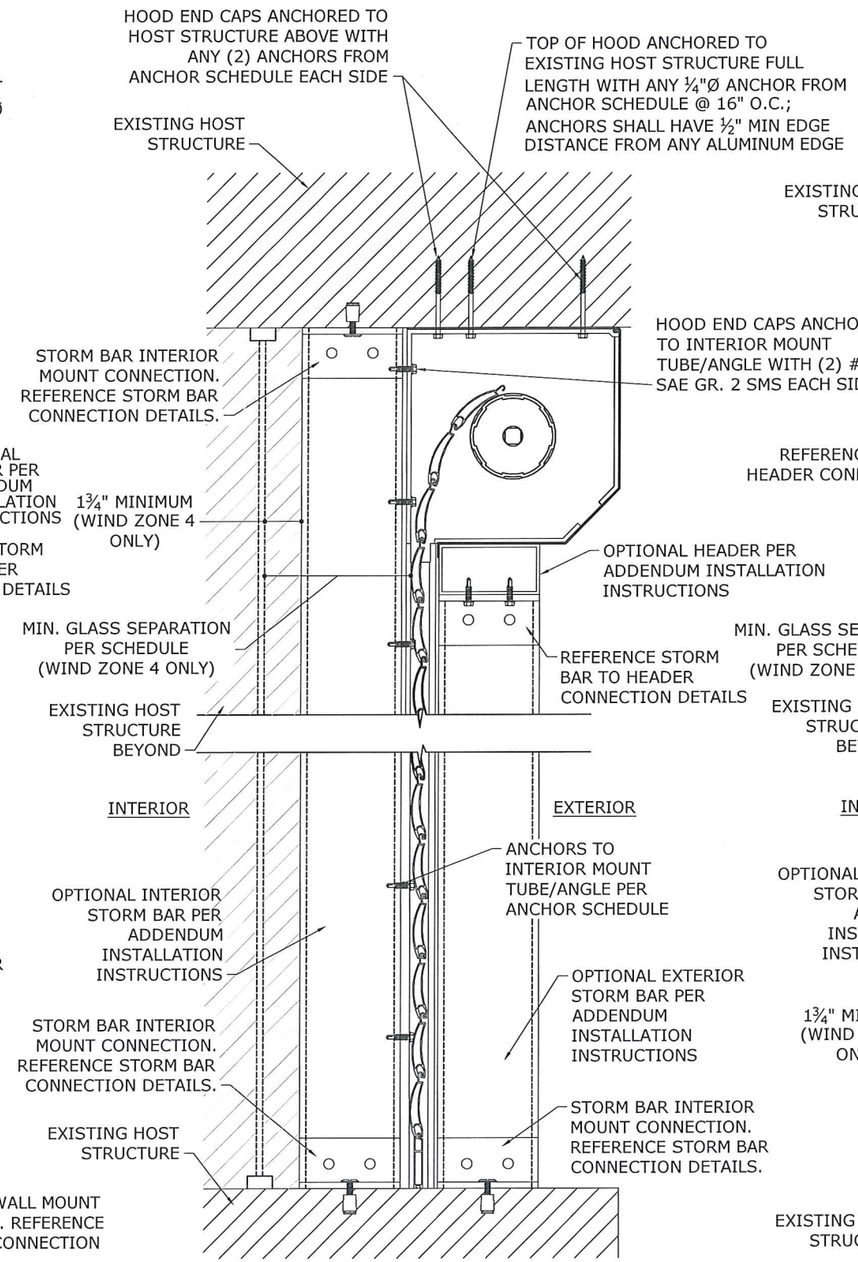

2 / 3 INTERIOR MOUNT (SHOWN W/ OPTIONAL STORM BARS)

N.T.S. VERT SECTION

NOTE: FOR OPTIONAL MOUNTING CONDITIONS, REFERENCE ADDENDUM STORM BAR AND MULLION INSTALLATION INSTRUCTIONS.

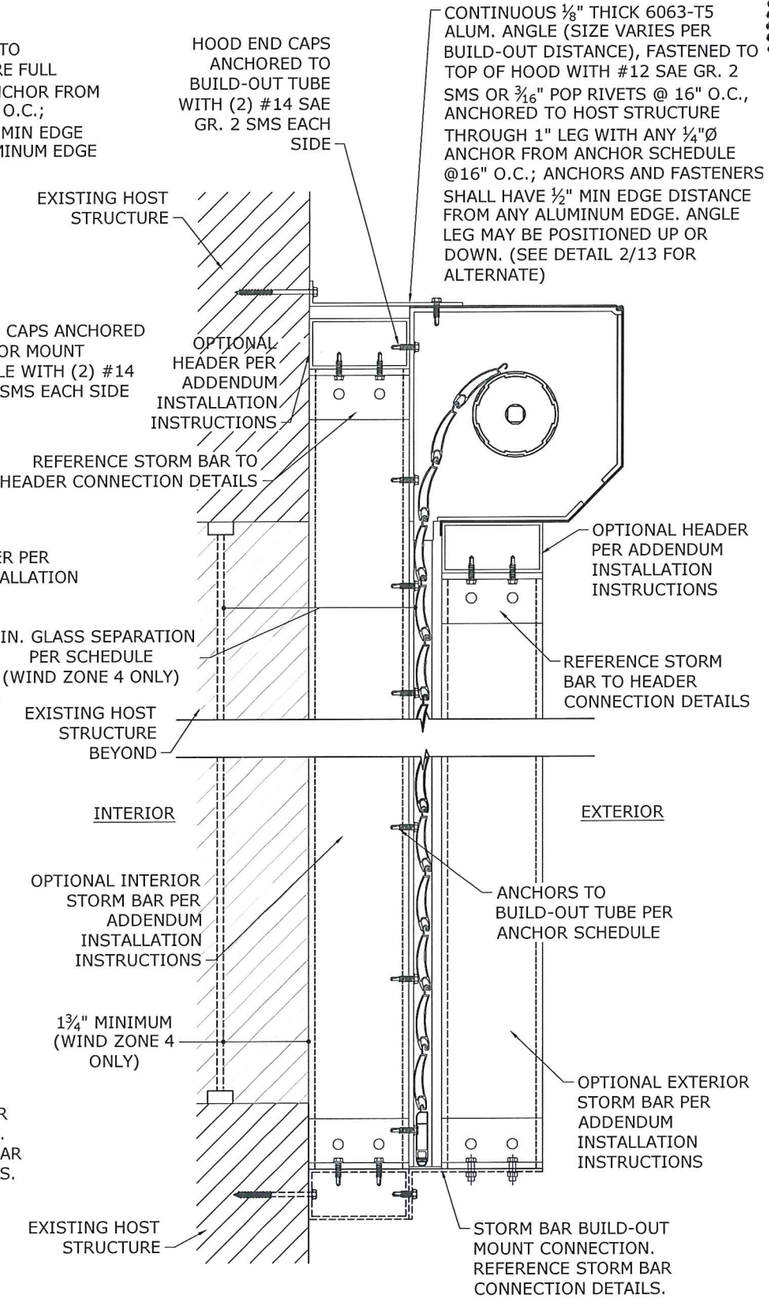

3 / 3 BUILD-OUT MOUNT (SHOWN W/ OPTIONAL STORM BARS)

N.T.S. VERT SECTION

NOTE: FOR OPTIONAL MOUNTING CONDITIONS, REFERENCE ADDENDUM STORM BAR AND MULLION INSTALLATION INSTRUCTIONS.

FRANK L. BENNARDO, P.E.
PE36064
STATE OF FLORIDA
02/18/2015
FRANK L. BENNARDO
CERT OF REG: #PE 36064
LICENSED PROFESSIONAL ENGINEER
FRANK L. BENNARDO, P.E.
160 SW 12th AVENUE
DEERFIELD BEACH, FL 33442
PH: (954) 354-0660 FAX: (954) 354-0943
POWERED BY THE INNOVATIONS OF
ENGINEERS EXPRESS
EXPERIENCE MORE AT WWW.ENGEXP.COM

Town & Country INDUSTRIES
Wholesale Aluminum and Building Products
A Division of ABC Supply Co., Inc.
400 WEST MCNAB ROAD
FT. LAUDERDALE, FL 33309

REMARKS	DRWN	CHKD	DATE
INIT ISSUE	KL	FLB	05/30/13
REVISE RIVETS	CSL	TSB	02/09/14
-	-	-	-
-	-	-	-

* THE DOCUMENT IS THE PROPERTY OF FRANK L. BENNARDO, P.E. AND SHALL NOT BE REPRODUCED IN WHOLE OR PART WITHOUT WRITTEN CONSENT OF FRANK L. BENNARDO, P.E. * ALTERATIONS, ADDITIONS, HIGHLIGHTING, OR OTHER MARKINGS TO THIS DOCUMENT ARE NOT PERMITTED AND INVALIDATE OUR CERTIFICATION.
COPYRIGHT FRANK L. BENNARDO P.E.

14-1765

SCALE: -

PAGE DESCRIPTION:
-
-

V:\Projects\14-1765 FL 14235 - Revise Rivet Locations for TDI 214-Resubmit Eval\WP\14-1765_a Maestroshield Roll-up.dwg
02/18/2015 - 11:12am

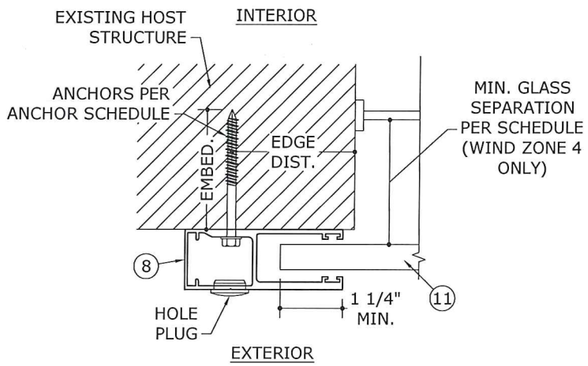

1/4 NON-END RETENTION TYPICAL WALL MOUNT

N.T.S. HORIZ SECTION

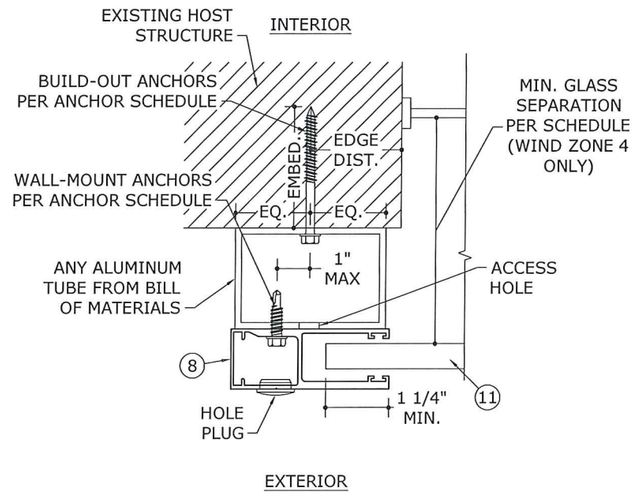

3/4 NON-END RETENTION TYP. BUILD-OUT MOUNT

N.T.S. HORIZ SECTION

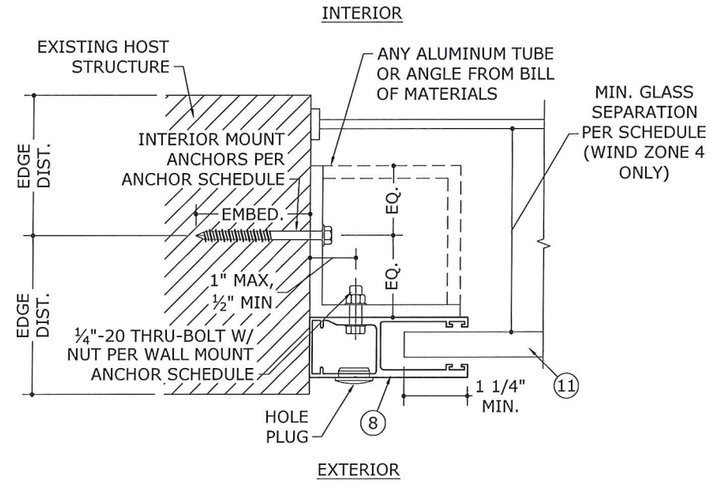

5/4 NON-END RETENTION TYP. INTERIOR MOUNT

N.T.S. HORIZ SECTION

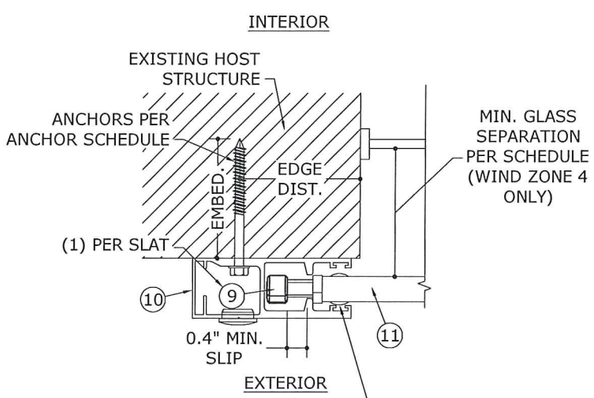

FOR SLAT SPANS UP TO 120", USE (1) #9 END RETENTION GUIDE WITH ONE 3/16" ALUMINUM RIVET FIRST (5) SLATS FROM TOP AND FIRST (6) SLATS FROM BOTTOM, THEN ONE EVERY OTHER SLAT. FOR SLAT SPANS OVER 120" USE ONE END RETENTION GUIDE AND TWO 3/16" ALUMINUM RIVETS ON EACH SLAT.

2/4 END RETENTION TYPICAL WALL MOUNT

N.T.S. HORIZ SECTION

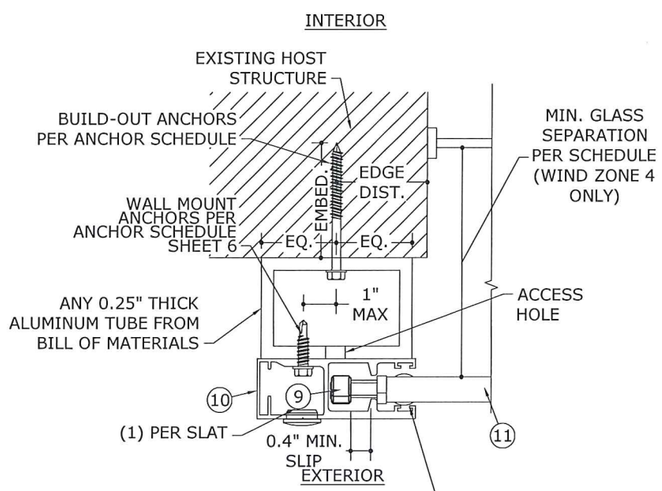

FOR SLAT SPANS UP TO 120", USE (1) #9 END RETENTION GUIDE WITH ONE 3/16" ALUMINUM RIVET FIRST (5) SLATS FROM TOP AND FIRST (6) SLATS FROM BOTTOM, THEN ONE EVERY OTHER SLAT. FOR SLAT SPANS OVER 120" USE ONE END RETENTION GUIDE AND TWO 3/16" ALUMINUM RIVETS ON EACH SLAT.

4/4 END RETENTION TYP. BUILD-OUT MOUNT

N.T.S. HORIZ SECTION

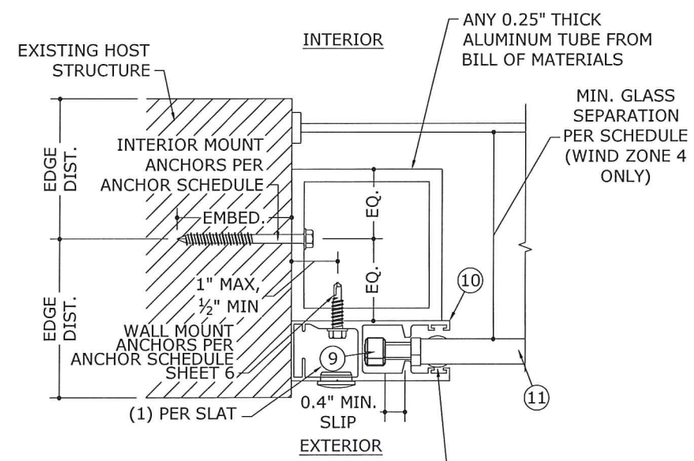

FOR SLAT SPANS UP TO 120", USE (1) #9 END RETENTION GUIDE WITH ONE 3/16" ALUMINUM RIVET FIRST (5) SLATS FROM TOP AND FIRST (6) SLATS FROM BOTTOM, THEN ONE EVERY OTHER SLAT. FOR SLAT SPANS OVER 120" USE ONE END RETENTION GUIDE AND TWO 3/16" ALUMINUM RIVETS ON EACH SLAT.

6/4 END RETENTION TYP. INTERIOR MOUNT

N.T.S. HORIZ SECTION

FRANK L. BENNARDO, P.E.
LICENSED
STATE OF TEXAS
02/18/2015
CERT. OF REG. #F-11383
FRANK L. BENNARDO P.E.
160 SW 12th AVENUE, SUITE 203
DEERFIELD BEACH, FL 33442
PH: (954) 354-0660 FAX: (954) 354-0664
POWERED BY THE INNOVATIONS OF
ENGINEERS EXPRESS
EXPERIENCE MORE AT WWW.ENGEXPRESS.COM

Town & Country INDUSTRIES
Wholesale Aluminum and Building Products
A Division of ABC Supply Co., Inc.
400 WEST MCNAB ROAD
FT. LAUDERDALE, FL 33309

REMARKS	DRWN	CHKD	DATE
INIT ISSUE	KL	FLB	05/30/13
REVISE RIVETS	CSL	TSB	02/09/14

THIS DOCUMENT IS THE PROPERTY OF FRANK L. BENNARDO, P.E AND SHALL NOT BE REPRODUCED IN WHOLE OR PART WITHOUT WRITTEN CONSENT OF FRANK L. BENNARDO, P.E. * ALTERATIONS, ADDITIONS, HIGHLIGHTING, OR OTHER MARKINGS TO THIS DOCUMENT ARE NOT PERMITTED AND INVALIDATE OUR CERTIFICATION.

COPYRIGHT FRANK L. BENNARDO P.E.

14-1765

SCALE: -

PAGE DESCRIPTION:
-
-

V:\Projects\14-1765 FL 14235 - Revise Rivet Locations for TDI 214-Resubmit Eval\WP\14-1765_a Maestroshield Roll-up.dwg
02/18/2015 - 11:12am

ANCHOR SCHEDULE:
NON-END RETENTION WALL MOUNT

ANCHOR	SUBSTRATE	MINIMUM EMBEDMENT	MINIMUM EDGE DISTANCE	MAXIMUM SPACING (O.C.)
1/4" ELCO ULTRACON	2700 PSI MIN. CONCRETE	1.75"	2.5"	6.0"
	GROUT-FILLED CONCRETE BLOCK	2.25"	2.5"	6.0"
	HOLLOW CONCRETE BLOCK	1.25"	2.5"	6.0"
1/4" ITW SS TAPCON	3192 PSI MIN. CONCRETE	1.75"	2.5"	6.0"
	HOLLOW CONCRETE BLOCK	1.25"	2.5"	5.7"
5/16" ELCO ULTRACON	3500 PSI MIN. CONCRETE	2.0"	3.125"	6.0"
	GROUT-FILLED CONCRETE BLOCK	2.25"	2.5"	6.0"
	HOLLOW CONCRETE BLOCK	1.25"	3.125"	6.0"
5/16 ITW TAPCON	2899 PSI MIN. CONCRETE	2.25"	3.125"	6.0"
	GROUT-FILLED CONCRETE BLOCK	2.25"	4.0"	6.0"
	HOLLOW CONCRETE BLOCK	1.75"	4.0"	6.0"
1/4" POWERS POWER-BOLT	3000 PSI MIN. CONCRETE	2.5"	3.0"	6.0"
	GROUT-FILLED CONCRETE BLOCK	2.5"	5.25"	6.0"
	HOLLOW CONCRETE BLOCK	1.5"	12.0"	6.0"
1/4" ALL-POINTS SOLID-SET	3000 PSI MIN. CONCRETE	0.875"	3.0"	6.0"
	HOLLOW CONCRETE BLOCK	0.875"	3.0"	6.0"
1/4" LAG SCREW	G=0.42 MIN. WOOD	1.5"	0.75"	6.0"
#14 WOOD SCREW	G=0.42 MIN. WOOD	1.5"	0.75"	6.0"
#14 410 SS SMS (OR 1/4-20 410 SS THRU-BOLT)	1/8" THICK MIN. 6063-T6 ALUMINUM	FULL THREAD PENETRATION	0.5"	6.0"
3/8" POWERS WEDGE BOLT	3000 PSI MIN. CONCRETE	3.5"	4.5"	6.0"
	GROUT-FILLED CONCRETE BLOCK*	2.5"	12.0"	6.0"
3/8" ELCO CONFLEX	1819 PSI MIN. CONCRETE	3.5"	3.75"	6.0"
	4510 PSI MIN. CONCRETE	3.5"	3.75"	6.0"
1/4" POWERS CARBON STEEL OR 304 SS TAPPER	3000 PSI MIN. CONCRETE	1.75"	3.0"	6.0"
	HOLLOW CONCRETE BLOCK	1.25"	3.0"	5.3"

ANCHOR NOTES:

1. ANCHORS SHALL BE INSTALLED IN ACCORDANCE WITH MANUFACTURERS' RECOMMENDATIONS.
2. WHERE ANCHORS FASTEN TO NARROW FACE OF STUD FRAMING, ANCHOR SHALL BE LOCATED IN CENTER OF NOMINAL 2x (MIN) WOOD STUD (i.e. 3/4" EDGE DISTANCE IS ACCEPTABLE FOR ANCHORS TO WOOD FRAMING).
3. MINIMUM EMBEDMENT SHALL BE AS NOTED IN ANCHOR SCHEDULE. MINIMUM EMBEDMENT AND EDGE DISTANCE EXCLUDES STUCCO, FOAM, BRICK, AND OTHER WALL FINISHES.
4. ANCHOR SCHEDULE APPLIES TO ALL PRODUCTS CERTIFIED HEREIN, BUT ONLY PROVIDES MAXIMUM ALLOWABLE ANCHOR SPACING. MAXIMUM ALLOWABLE SPANS AND PRESSURES INDICATED IN SPAN SCHEDULE SHALL APPLY.
5. WHERE EXISTING STRUCTURE IS WOOD FRAMING, EXISTING CONDITIONS MAY VARY. FIELD VERIFY THAT FASTENERS ARE INTO ADEQUATE WOOD FRAMING MEMBERS, NOT INTO PLYWOOD.
6. WOOD BUCKS (BY OTHERS) SHALL BE ANCHORED PROPERLY TO TRANSFER LOADS TO THE EXISTING STRUCTURE.
7. MACHINE SCREWS SHALL HAVE MINIMUM OF 1/2" ENGAGEMENT OF THREADS IN BASE ANCHOR AND MAY HAVE EITHER A PAN HEAD, TRUSS HEAD, OR WAFER HEAD ("SIDEWALK BOLT") U.N.O.
8. SHEET METAL SCREWS SHALL BE INSTALLED WITH FULL ENGAGEMENT OF THREADS INTO METAL HOST STRUCTURE.
9. ▨ DESIGNATES ANCHOR CONDITIONS WHICH ARE NOT ACCEPTABLE FOR USE.
10. * ANCHOR SHALL PENETRATE THROUGH FACE SHELL INTO GROUTED CELL.

ANCHOR SCHEDULE:
NON-END RETENTION INTERIOR MOUNT

ANCHOR	SUBSTRATE	MINIMUM EMBEDMENT	MINIMUM EDGE DISTANCE	MAXIMUM SPACING (O.C.)
1/4" ELCO ULTRACON	2700 PSI MIN. CONCRETE	1.75"	2.5"	6.0"
	GROUT-FILLED CONCRETE BLOCK	2.25"	2.5"	6.0"
	HOLLOW CONCRETE BLOCK	1.25"	2.5"	5.5"
1/4" ITW SS TAPCON	3192 PSI MIN. CONCRETE	1.75"	2.5"	6.0"
	HOLLOW CONCRETE BLOCK	1.25"	2.5"	4.6"
5/16" ELCO ULTRACON	3500 PSI MIN. CONCRETE	2.0"	3.125"	6.0"
	GROUT-FILLED CONCRETE BLOCK	2.25"	2.5"	6.0"
	HOLLOW CONCRETE BLOCK	1.25"	3.125"	6.0"
5/16 ITW TAPCON	2899 PSI MIN. CONCRETE	2.25"	3.125"	6.0"
	GROUT-FILLED CONCRETE BLOCK	2.25"	4.0"	6.0"
	HOLLOW CONCRETE BLOCK	1.75"	4.0"	6.0"
1/4" POWERS POWER-BOLT	3000 PSI MIN. CONCRETE	2.5"	3.0"	6.0"
	GROUT-FILLED CONCRETE BLOCK	2.5"	5.25"	6.0"
	HOLLOW CONCRETE BLOCK	1.5"	12.0"	6.0"
1/4" ALL-POINTS SOLID-SET	3000 PSI MIN. CONCRETE	0.875"	3.0"	6.0"
	HOLLOW CONCRETE BLOCK	0.875"	3.0"	6.0"
1/4" LAG SCREW	G=0.42 MIN. WOOD	1.5"	0.75"	5.2"
#14 WOOD SCREW	G=0.42 MIN. WOOD	1.5"	0.75"	5.0"
#14 410 SS SMS (OR 1/4-20 410 SS THRU-BOLT)	1/8" THICK MIN. 6063-T6 ALUMINUM	FULL THREAD PENETRATION	0.5"	6.0"
3/8" POWERS WEDGE BOLT	3000 PSI MIN. CONCRETE	3.5"	4.5"	6.0"
	GROUT-FILLED CONCRETE BLOCK*	2.5"	12.0"	6.0"
3/8" ELCO CONFLEX	1819 PSI MIN. CONCRETE	3.5"	3.75"	6.0"
	4510 PSI MIN. CONCRETE	3.5"	3.75"	6.0"
1/4" POWERS CARBON STEEL OR 304 SS TAPPER	3000 PSI MIN. CONCRETE	1.75"	3.0"	6.0"
	HOLLOW CONCRETE BLOCK	1.25"	3.0"	4.3"

ANCHOR SCHEDULE:
NON-END RETENTION BUILD-OUT MOUNT

ANCHOR	SUBSTRATE	MINIMUM EMBEDMENT	MINIMUM EDGE DISTANCE	MAXIMUM SPACING (O.C.)
1/4" ELCO ULTRACON	2700 PSI MIN. CONCRETE	1.75"	2.5"	6.0"
	GROUT-FILLED CONCRETE BLOCK	2.25"	2.5"	6.0"
	HOLLOW CONCRETE BLOCK	1.25"	2.5"	▨
1/4" ITW SS TAPCON	3192 PSI MIN. CONCRETE	1.75"	2.5"	6.0"
	HOLLOW CONCRETE BLOCK	1.25"	2.5"	3.4"
5/16" ELCO ULTRACON	3500 PSI MIN. CONCRETE	2.0"	3.125"	6.0"
	GROUT-FILLED CONCRETE BLOCK	2.25"	2.5"	6.0"
	HOLLOW CONCRETE BLOCK	1.25"	3.125"	6.0"
5/16 ITW TAPCON	2899 PSI MIN. CONCRETE	2.25"	3.125"	6.0"
	GROUT-FILLED CONCRETE BLOCK	2.25"	4.0"	6.0"
	HOLLOW CONCRETE BLOCK	1.75"	4.0"	5.6"
1/4" POWERS POWER-BOLT	3000 PSI MIN. CONCRETE	2.5"	3.0"	6.0"
	GROUT-FILLED CONCRETE BLOCK	2.5"	5.25"	6.0"
	HOLLOW CONCRETE BLOCK	1.5"	12.0"	6.0"
1/4" ALL-POINTS SOLID-SET	3000 PSI MIN. CONCRETE	0.875"	3.0"	6.0"
	HOLLOW CONCRETE BLOCK	0.875"	3.0"	6.0"
1/4" LAG SCREW	G=0.42 MIN. WOOD	1.5"	0.75"	6.0"
#14 WOOD SCREW	G=0.42 MIN. WOOD	1.5"	0.75"	6.0"
#14 410 SS SMS (OR 1/4-20 410 SS THRU-BOLT)	1/8" THICK MIN. 6063-T6 ALUMINUM	FULL THREAD PENETRATION	0.5"	6.0"
3/8" POWERS WEDGE BOLT	3000 PSI MIN. CONCRETE	3.5"	4.5"	6.0"
	GROUT-FILLED CONCRETE BLOCK*	2.5"	12.0"	6.0"
3/8" ELCO CONFLEX	1819 PSI MIN. CONCRETE	3.5"	3.75"	6.0"
	4510 PSI MIN. CONCRETE	3.5"	3.75"	6.0"
1/4" POWERS CARBON STEEL OR 304 SS TAPPER	3000 PSI MIN. CONCRETE	1.75"	3.0"	6.0"
	HOLLOW CONCRETE BLOCK	1.25"	3.0"	▨

FRANK L. BENNARDO, P.E.
LICENSE NO. 49064
STATE OF TEXAS
02/18/2015
CERT OF REG. #F-11933
FRANK L. BENNARDO P.E.
LICENSED
PROFESSIONAL ENGINEER
FRANK L. BENNARDO, P.E.
160 SW 12th AVENUE
DEERFIELD BEACH, FL 33442
Ph: (954) 354-0660 FAX: (954) 354-0943
POWERED BY THE INNOVATIONS OF
ENGINEERING EXPRESS
EXPERIENCE MORE AT WWW.ENGEXP.COM

TownCountry INDUSTRIES
Wholesale Aluminum and Building Products
A Division of ABC Supply Co., Inc.
400 WEST MCNAB ROAD
FT. LAUDERDALE, FL 33309

REMARKS	DRWN	CHKD	DATE
INIT ISSUE	KL	FLB	05/30/13
REVISE RIVETS	CSL	TSB	02/09/14
-	-	-	-
-	-	-	-
-	-	-	-

THIS DOCUMENT IS THE PROPERTY OF FRANK L. BENNARDO, P.E AND SHALL NOT BE REPRODUCED IN WHOLE OR IN PART WITHOUT WRITTEN CONSENT OF FRANK L. BENNARDO, P.E. * ALTERATIONS, ADDITIONS, HIGHLIGHTING, OR OTHER MARKINGS TO THIS DOCUMENT ARE NOT PERMITTED AND INVALIDATE OUR CERTIFICATION.

COPYRIGHT FRANK L. BENNARDO P.E.

14-1765

SCALE: -

PAGE DESCRIPTION:
-
-

V:\Projects\14-1765 FL 14235 - Revise Rivet Locations for TDI 214-Resubmit Eval\WP\14-1765_a Maestroshield Roll-up.dwg
02/18/2015 - 11:12am

ANCHOR SCHEDULE: END RETENTION WALL MOUNT & TRACK CONNECTION TO BUILD OUT OR MULLION

ANCHOR NOTES: SEE SHEET 5 FOR ANCHOR NOTES.

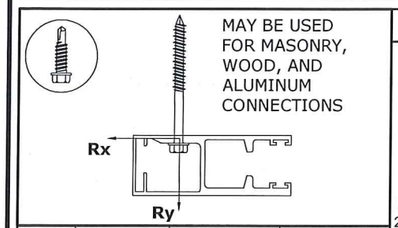

MAY BE USED FOR MASONRY, WOOD, AND ALUMINUM CONNECTIONS

MAXIMUM SPACING (O.C.)

SLAT SPAN	DESIGN PRESSURE	Rx	Ry	1/4" ELCO ULTRACON TO 2700 PSI MIN. CONCRETE; 1.75" MIN. EMBEDMENT; 2.5" MIN. EDGE DISTANCE	1/4" SS ITW TAPCON TO 3192 PSI MIN. CONCRETE; 1.75" MIN. EMBEDMENT; 2.5" MIN. EDGE DISTANCE	5/16" ELCO ULTRACON TO 3500 PSI MIN. CONCRETE; 2" MIN. EMBEDMENT; 3.125" MIN. EDGE DISTANCE	5/16" ITW TAPCON: TO 2899 PSI MIN. CONCRETE; 2.25" MIN. EMBEDMENT; 3.125" MIN. EDGE DISTANCE	5/16" ITW TAPCON: TO GROUT-FILLED CONCRETE BLOCK; 2.25" MIN. EMBEDMENT; 4" MIN. EDGE DISTANCE	5/16" ITW TAPCON: TO HOLLOW CONCRETE BLOCK; 1.75" MIN. EMBEDMENT; 4" MIN. EDGE DISTANCE	1/4" POWERS POWER-BOLT TO 3000 PSI MIN. CONCRETE; 2.5" MIN. EMBEDMENT; 3" MIN. EDGE DISTANCE	1/4" ALL-POINTS SOLID-SET: TO 3000 PSI MIN. CONCRETE; 0.875" MIN. EMBEDMENT; 3" MIN. EDGE DISTANCE	1/4" ALL-POINTS SOLID-SET: TO HOLLOW BLOCK; 0.875" MIN. EMBEDMENT; 3" MIN. EDGE DISTANCE	1/4" LAG SCREW TO G=0.55 MIN WOOD; 1.5" MIN. EMBEDMENT; 0.75" MIN. EDGE DISTANCE	5/16" LAG SCREW TO G=0.42 MIN WOOD; 2" MIN. EMBEDMENT; 0.75" MIN. EDGE DISTANCE	#14 WOOD SCREW TO G=0.55 MIN WOOD; 1.5" MIN. EMBEDMENT; 0.75" MIN. EDGE DISTANCE	#14 410 SS SMS W/ FULL THREAD PENETRATION OR 1/4-20 410 SS THRU-BOLT TO 0.125" MIN. 6063-T6 ALUM; 0.5" MIN. EDGE DISTANCE	5/16" 410 SS SMS W/ FULL THREAD PENETRATION OR 5/16-18 410 SS THRU-BOLT TO 0.25" MIN. 6063-T6 ALUM; 0.625" MIN. EDGE DISTANCE	3/8" POWERS WEDGE BOLT TO 3000 PSI MIN. CONCRETE; 3.5" MIN. EMBEDMENT; 4.5" MIN. EDGE DISTANCE	3/8" ELCO CONFLEX: TO 1819 PSI MIN. CONCRETE; 3.5" MIN. EMBEDMENT; 3.75" MIN. EDGE DISTANCE	3/8" ELCO CONFLEX: TO 4510 PSI MIN. CONCRETE; 3.5" MIN. EMBEDMENT; 3.75" MIN. EDGE DISTANCE
81"	+/- 45 PSF	76.5 LB/FT	151.9 LB/FT	6.0"	6.0"	6.0"	6.0"	6.0"	6.0"	6.0"	6.0"	6.0"	6.0"	6.0"	6.0"	6.0"	6.0"	6.0"	6.0"	6.0"
	+/- 50 PSF	143.5 LB/FT	168.8 LB/FT	6.0"	6.0"	6.0"	6.0"	6.0"	6.0"	6.0"	6.0"	6.0"	6.0"	6.0"	6.0"	6.0"	6.0"	6.0"	6.0"	6.0"
	+/- 60 PSF	277.2 LB/FT	202.5 LB/FT	6.0"	6.0"	6.0"	6.0"	6.0"	6.0"	6.0"	6.0"	6.0"	5.6"	6.0"	6.0"	6.0"	6.0"	6.0"	6.0"	6.0"
	+/- 70 PSF	410.6 LB/FT	236.3 LB/FT	6.0"	6.0"	6.0"	6.0"	6.0"	5.9"	6.0"	6.0"	5.9"	4.5"	3.9"	4.6"	6.0"	6.0"	6.0"	6.0"	6.0"
	+/- 80 PSF	543.6 LB/FT	270.0 LB/FT	6.0"	6.0"	6.0"	6.0"	6.0"	4.8"	6.0"	6.0"	4.7"	3.4"	3.0"	3.6"	6.0"	6.0"	6.0"	6.0"	6.0"
	+/- 90 PSF	676.3 LB/FT	303.8 LB/FT	5.6"	6.0"	6.0"	6.0"	6.0"	4.1"	6.0"	6.0"	3.9"	2.8"	2.4"	2.9"	5.6"	5.9"	6.0"	6.0"	6.0"
	+/- 105 PSF	874.8 LB/FT	354.4 LB/FT	4.4"	4.8"	6.0"	6.0"	6.0"		5.9"	5.5"	3.1"	2.2"		2.3"	4.6"	4.9"	6.0"	6.0"	6.0"
	+/- 120 PSF	1072.4 LB/FT	409.9 LB/FT	3.7"	4.0"	6.0"	6.0"	5.3"		5.0"	4.5"					3.9"	4.2"	6.0"	6.0"	6.0"
102"	+/- 30 PSF	236.3 LB/FT	127.5 LB/FT	6.0"	6.0"	6.0"	6.0"	6.0"	6.0"	6.0"	6.0"	6.0"	6.0"	6.0"	6.0"	6.0"	6.0"	6.0"	6.0"	6.0"
	+/- 35 PSF	330.9 LB/FT	148.8 LB/FT	6.0"	6.0"	6.0"	6.0"	6.0"	6.0"	6.0"	6.0"	6.0"	5.7"	4.9"	5.9"	6.0"	6.0"	6.0"	6.0"	6.0"
	+/- 40 PSF	425.4 LB/FT	170.0 LB/FT	6.0"	6.0"	6.0"	6.0"	6.0"	6.0"	6.0"	6.0"	6.0"	4.5"	3.9"	4.7"	6.0"	6.0"	6.0"	6.0"	6.0"
	+/- 45 PSF	519.7 LB/FT	191.3 LB/FT	6.0"	6.0"	6.0"	6.0"	6.0"	5.8"	6.0"	6.0"	5.4"	3.7"	3.2"	3.9"	6.0"	6.0"	6.0"	6.0"	6.0"
	+/- 50 PSF	613.8 LB/FT	212.5 LB/FT	6.0"	6.0"	6.0"	6.0"	6.0"	5.1"	6.0"	6.0"	4.6"	3.2"	2.7"	3.3"	6.0"	6.0"	6.0"	6.0"	6.0"
	+/- 60 PSF	801.5 LB/FT	267.8 LB/FT	5.1"	5.5"	6.0"	6.0"	6.0"		6.0"	6.0"	3.6"	2.4"	2.1"	2.5"	5.5"	6.0"	6.0"	6.0"	6.0"
	+/- 70 PSF	988.5 LB/FT	355.9 LB/FT	4.0"	4.4"	6.0"	6.0"	5.9"		5.5"	5.0"		2.0"		2.0"	4.3"	4.7"	6.0"	6.0"	6.0"
	+/- 90 PSF	1360.1 LB/FT	557.9 LB/FT		3.1"	5.3"	5.2"	4.1"			3.5"					2.9"	3.1"	6.0"	6.0"	6.0"
	+/- 105 PSF	1636.7 LB/FT	730.1 LB/FT				4.2"									2.3"	2.5"	6.0"	6.0"	6.0"
	+/- 120 PSF	1911.5 LB/FT	918.5 LB/FT														2.0"	6.0"	6.0"	6.0"
126"	+/- 30 PSF	563.0 LB/FT	157.5 LB/FT	6.0"	6.0"	6.0"	6.0"	6.0"	6.0"	6.0"	6.0"	5.3"	3.5"	3.0"	3.7"	6.0"	6.0"	6.0"	6.0"	6.0"
	+/- 35 PSF	692.4 LB/FT	197.0 LB/FT	6.0"	6.0"	6.0"	6.0"	6.0"	4.9"	6.0"	6.0"	4.3"	2.9"	2.4"	3.0"	6.0"	6.0"	6.0"	6.0"	6.0"
	+/- 40 PSF	821.4 LB/FT	247.0 LB/FT	5.1"	5.5"	6.0"	6.0"	6.0"	4.0"	6.0"	6.0"	3.6"	2.4"	2.1"	2.5"	5.7"	6.0"	6.0"	6.0"	6.0"
	+/- 45 PSF	950.1 LB/FT	300.9 LB/FT	4.3"	4.7"	6.0"	6.0"	6.0"		5.9"	5.4"	3.0"	2.1"		2.2"	4.8"	5.3"	6.0"	6.0"	6.0"
	+/- 50 PSF	1078.5 LB/FT	358.6 LB/FT		4.1"	6.0"	6.0"	5.5"		5.2"	4.7"					4.1"	4.5"	6.0"	6.0"	6.0"
	+/- 60 PSF	1334.0 LB/FT	485.0 LB/FT		3.2"	5.6"	5.5"	4.3"			3.7"					3.2"	3.5"	6.0"	6.0"	6.0"
	+/- 70 PSF	1588.0 LB/FT	625.2 LB/FT				4.5"				3.0"					2.6"	2.8"	6.0"	6.0"	6.0"
	+/- 90 PSF	2091.1 LB/FT	944.1 LB/FT															6.0"	6.0"	6.0"
	+/- 105 PSF	2463.8 LB/FT	1213.6 LB/FT															5.6"		6.0"
	+/- 120 PSF	2832.3 LB/FT	1505.7 LB/FT															4.7"		6.0"
150"	+/- 30 PSF	860.1 LB/FT	221.6 LB/FT	5.0"	5.4"	6.0"	6.0"	6.0"	4.1"	6.0"	6.0"	3.5"	2.3"	2.0"	2.4"	5.8"	6.0"	6.0"	6.0"	6.0"
	+/- 35 PSF	1027.6 LB/FT	280.2 LB/FT	4.1"	4.5"	6.0"	6.0"	6.0"		5.7"	5.1"				2.0"	4.7"	5.4"	6.0"	6.0"	6.0"
	+/- 40 PSF	1194.4 LB/FT	343.6 LB/FT		3.8"	6.0"	6.0"	5.1"			4.4"					4.0"	4.5"	6.0"	6.0"	6.0"
	+/- 45 PSF	1360.6 LB/FT	411.6 LB/FT		3.3"	5.7"	5.7"	4.4"			3.8"					3.4"	3.8"	6.0"	6.0"	6.0"
	+/- 50 PSF	1526.2 LB/FT	484.1 LB/FT			5.1"	5.0"				3.3"					3.0"	3.3"	6.0"	6.0"	6.0"
	+/- 60 PSF	1855.4 LB/FT	642.3 LB/FT				4.0"									2.3"	2.6"	6.0"	6.0"	6.0"
	+/- 67 PSF	2081.0 LB/FT	761.4 LB/FT													2.0"	2.2"	6.0"	6.0"	6.0"
170"	+/- 30 PSF	1102.8 LB/FT	277.0 LB/FT		4.2"	6.0"	6.0"	5.7"		5.5"	4.9"					4.6"	5.2"	6.0"	6.0"	6.0"
	+/- 35 PSF	1304.1 LB/FT	347.2 LB/FT		3.5"	6.0"	6.0"	4.7"			4.1"					3.8"	4.3"	6.0"	6.0"	6.0"
	+/- 40 PSF	1504.5 LB/FT	423.1 LB/FT		3.0"	5.3"	5.2"	4.1"			3.5"					3.2"	3.6"	6.0"	6.0"	6.0"
	+/- 45 PSF	1704.0 LB/FT	504.4 LB/FT				4.5"				3.0"					2.8"	3.1"	6.0"	6.0"	6.0"
	+/- 50 PSF	1902.6 LB/FT	591.3 LB/FT				4.0"									2.4"	2.7"	6.0"	6.0"	6.0"
	+/- 62 PSF	2379.0 LB/FT	823.1 LB/FT														2.0"	6.0"	6.0"	6.0"
200"	+/- 30 PSF	1471.3 LB/FT	360.5 LB/FT		3.2"	5.6"	5.5"	4.3"			3.7"					3.5"	4.0"	6.0"	6.0"	6.0"
	+/- 35 PSF	1726.7 LB/FT	450.0 LB/FT				4.6"				3.1"					2.9"	3.3"	6.0"	6.0"	6.0"
	+/- 40 PSF	1980.6 LB/FT	547.0 LB/FT				4.0"									2.4"	2.8"	6.0"	6.0"	6.0"
	+/- 45 PSF	2233.1 LB/FT	651.3 LB/FT													2.1"	2.4"	6.0"	6.0"	6.0"
	+/- 50 PSF	2483.9 LB/FT	762.7 LB/FT														2.1"	6.0"	6.0"	6.0"
	+/- 57 PSF	2822.2 LB/FT	925.4 LB/FT															5.3"		6.0"
220"	+/- 30 PSF	1723.6 LB/FT	418.1 LB/FT				4.7"				3.1"					3.0"	3.4"	6.0"	6.0"	6.0"
	+/- 35 PSF	2017.0 LB/FT	522.1 LB/FT				4.0"									2.5"	2.8"	6.0"	6.0"	6.0"
	+/- 40 PSF	2308.5 LB/FT	634.9 LB/FT													2.1"	2.4"	6.0"	6.0"	6.0"
	+/- 45 PSF	2597.8 LB/FT	756.4 LB/FT														2.0"	5.9"	6.0"	6.0"
	+/- 54 PSF	3113.0 LB/FT	996.3 LB/FT															4.8"		6.0"
256.5"	+/- 30 PSF	2201.6 LB/FT	530.2 LB/FT													2.3"	2.7"	6.0"	6.0"	6.0"
	+/- 35 PSF	2567.9 LB/FT	663.7 LB/FT														2.2"	6.0"	6.0"	6.0"
	+/- 40 PSF	2930.9 LB/FT	809.1 LB/FT															5.3"		6.0"
	+/- 45 PSF	3290.4 LB/FT	966.1 LB/FT															4.6"		6.0"
	+/- 50 PSF	3646.2 LB/FT	1134.5 LB/FT																	

FRANK L. BENNARDO, P.E.
PE36064
STATE OF TEXAS
02/18/2015
FRANK L. BENNARDO
LICENSED
PROFESSIONAL ENGINEER
#PE36064
FRANK L. BENNARDO, P.E.
160 SW 12th AVENUE #106
DEERFIELD BEACH, FL 33442
Ph: (954) 354-0660 Fax: (954) 354-0662
POWERED BY THE INNOVATIONS OF
ENGINEERING EXPRESS
EXPERIENCE MORE AT WWW.ENGEXPRESS.COM

Town & Country INDUSTRIES
Wholesale Aluminum and Building Products
A Division of ABC Supply Co., Inc.
400 WEST MCNAB ROAD
FT. LAUDERDALE, FL 33309

REMARKS	DRWN	CHKD	DATE
INIT ISSUE	KL	FLB	05/30/13
REVISE RIVETS	CSL	TSB	02/09/14

THIS DOCUMENT IS THE PROPERTY OF FRANK L. BENNARDO, P.E. AND SHALL NOT BE REPRODUCED IN WHOLE OR IN PART WITHOUT WRITTEN PERMISSION OF FRANK L. BENNARDO, P.E. * ALTERATIONS, ADDITIONS, HIGHLIGHTING, OR OTHER MARKINGS TO THIS DOCUMENT ARE NOT PERMITTED AND INVALIDATE OUR CERTIFICATION.

COPYRIGHT FRANK L. BENNARDO P.E.

14-1765

SCALE: -

PAGE DESCRIPTION:
-
-

V:\Projects\14-1765 FL 14235 - Revise Rivet Locations for TDI 214-Resubmit Eval\WP\14-1765_a Maestroshield Roll-up.dwg
02/18/2015 - 11:12am

ANCHOR SCHEDULE: END RETENTION BUILD-OUT MOUNT

ANCHOR NOTES: SEE SHEET 5 FOR ANCHOR NOTES.

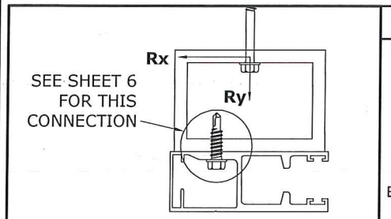

MAXIMUM SPACING (O.C.)

SLAT SPAN	DESIGN PRESSURE	Rx	Ry	1/4" ELCO ULTRACON TO 2700 PSI MIN. CONCRETE; 1.75" MIN. EMBEDMENT; 2.5" MIN. EDGE DISTANCE	1/4" SS ITW TAPCON TO 3192 PSI MIN. CONCRETE; 1.75" MIN. EMBEDMENT; 2.5" MIN. EDGE DISTANCE	5/16" ELCO ULTRACON TO 3500 PSI MIN. CONCRETE; 2" MIN. EMBEDMENT; 3.125" MIN. EDGE DISTANCE	5/16" ITW TAPCON: TO 2899 PSI MIN. CONCRETE; 2.25" MIN. EMBEDMENT; 3.125" MIN. EDGE DISTANCE	5/16" ITW TAPCON: TO GROUT-FILLED CONCRETE BLOCK; 2.25" MIN. EMBEDMENT; 4" MIN. EDGE DISTANCE	5/16" ITW TAPCON: TO HOLLOW CONCRETE BLOCK; 1.75" MIN. EMBEDMENT; 4" MIN. EDGE DISTANCE	1/4" POWERS POWER-BOLT TO 3000 PSI MIN. CONCRETE; 2.5" MIN. EMBEDMENT; 3" MIN. EDGE DISTANCE	1/4" ALL-POINTS SOLID-SET: TO 3000 PSI MIN. CONCRETE; 0.875" MIN. EMBEDMENT; 3" MIN. EDGE DISTANCE	1/4" ALL-POINTS SOLID-SET: TO HOLLOW BLOCK; 0.875" MIN. EMBEDMENT; 3" MIN. EDGE DISTANCE	1/4" LAG SCREW TO G=0.55 MIN WOOD; 1.5" MIN. EMBEDMENT; 0.75" MIN. EDGE DISTANCE	5/16" LAG SCREW TO G=0.42 MIN WOOD; 2" MIN. EMBEDMENT; 0.75" MIN. EDGE DISTANCE	#14 WOOD SCREW TO G=0.55 MIN WOOD; 1.5" MIN. EMBEDMENT; 0.75" MIN. EDGE DISTANCE	#14 410 SS SMS W/ FULL THREAD PENETRATION OR 1/4-20 410 SS THRU-BOLT TO 0.125" MIN. 6063-T6 ALUM; 0.5" MIN. EDGE DISTANCE	5/16" 410 SS SMS W/ FULL THREAD PENETRATION OR 5/16-18 410 SS THRU-BOLT TO 0.25" MIN. 6063-T6 ALUM; 0.625" MIN. EDGE DISTANCE	3/8" POWERS WEDGE BOLT TO 3000 PSI MIN. CONCRETE; 3.5" MIN. EMBEDMENT; 4.5" MIN. EDGE DISTANCE	3/8" ELCO CONFLEX: TO 1819 PSI MIN. CONCRETE; 3.5" MIN. EMBEDMENT; 3.75" MIN. EDGE DISTANCE	3/8" ELCO CONFLEX: TO 4510 PSI MIN. CONCRETE; 3.5" MIN. EMBEDMENT; 3.75" MIN. EDGE DISTANCE
81"	+/- 45 PSF	76.5 LB/FT	253.2 LB/FT	6.0"	6.0"	6.0"	6.0"	6.0"	6.0"	6.0"	6.0"	6.0"	6.0"	6.0"	6.0"	6.0"	6.0"	6.0"	6.0"	6.0"
	+/- 50 PSF	143.5 LB/FT	281.3 LB/FT	6.0"	6.0"	6.0"	6.0"	6.0"	6.0"	6.0"	6.0"	6.0"	6.0"	6.0"	6.0"	6.0"	6.0"	6.0"	6.0"	6.0"
	+/- 60 PSF	277.2 LB/FT	337.6 LB/FT	6.0"	6.0"	6.0"	6.0"	6.0"	5.4"	6.0"	6.0"	6.0"	5.7"	5.1"	5.7"	6.0"	6.0"	6.0"	6.0"	6.0"
	+/- 70 PSF	410.6 LB/FT	393.8 LB/FT	6.0"	6.0"	6.0"	6.0"	6.0"	4.3"	6.0"	6.0"	4.7"	4.1"	3.6"	4.1"	5.7"	5.4"	6.0"	6.0"	6.0"
	+/- 80 PSF	543.6 LB/FT	450.1 LB/FT	5.5"	6.0"	6.0"	6.0"	6.0"		6.0"	6.0"	3.8"	3.2"	2.8"	3.2"	4.8"	4.6"	6.0"	6.0"	6.0"
	+/- 90 PSF	676.3 LB/FT	506.4 LB/FT	4.6"	5.1"	6.0"	6.0"	6.0"		5.9"	5.6"	3.2"	2.6"	2.3"	2.6"	4.1"	4.0"	6.0"	6.0"	6.0"
	+/- 105 PSF	874.8 LB/FT	590.7 LB/FT		4.1"	6.0"	6.0"	5.5"			4.6"		2.0"		2.1"	3.4"	3.4"	6.0"	6.0"	6.0"
	+/- 120 PSF	1072.4 LB/FT	683.3 LB/FT		3.4"	5.8"	5.6"	4.6"			3.8"					2.9"	2.9"	6.0"	6.0"	6.0"
102"	+/- 30 PSF	236.3 LB/FT	212.5 LB/FT	6.0"	6.0"	6.0"	6.0"	6.0"	6.0"	6.0"	6.0"	6.0"	6.0"	6.0"	6.0"	6.0"	6.0"	6.0"	6.0"	6.0"
	+/- 35 PSF	330.9 LB/FT	248.0 LB/FT	6.0"	6.0"	6.0"	6.0"	6.0"	6.0"	6.0"	6.0"	6.0"	5.3"	4.7"	5.4"	6.0"	6.0"	6.0"	6.0"	6.0"
	+/- 40 PSF	425.4 LB/FT	283.4 LB/FT	6.0"	6.0"	6.0"	6.0"	6.0"	5.2"	6.0"	6.0"	5.4"	4.2"	3.7"	4.3"	6.0"	6.0"	6.0"	6.0"	6.0"
	+/- 45 PSF	519.7 LB/FT	318.8 LB/FT	6.0"	6.0"	6.0"	6.0"	6.0"	4.5"	6.0"	6.0"	4.5"	3.5"	3.0"	3.6"	6.0"	6.0"	6.0"	6.0"	6.0"
	+/- 50 PSF	613.8 LB/FT	354.2 LB/FT	5.6"	6.0"	6.0"	6.0"	6.0"		6.0"	6.0"	3.9"	3.0"	2.6"	3.1"	5.4"	5.4"	6.0"	6.0"	6.0"
	+/- 60 PSF	801.5 LB/FT	446.4 LB/FT	4.4"	4.8"	6.0"	6.0"	6.0"		5.7"	5.4"	3.0"	2.3"	2.0"	2.4"	4.2"	4.3"	6.0"	6.0"	6.0"
	+/- 70 PSF	988.5 LB/FT	593.3 LB/FT		3.8"	6.0"	6.0"	5.1"			4.2"					3.2"	3.3"	6.0"	6.0"	6.0"
	+/- 90 PSF	1360.1 LB/FT	930.0 LB/FT				4.3"									2.2"	2.2"	6.0"	6.0"	6.0"
	+/- 105 PSF	1636.7 LB/FT	1217.1 LB/FT															6.0"	6.0"	6.0"
	+/- 120 PSF	1911.5 LB/FT	1531.1 LB/FT															6.0"		6.0"
126"	+/- 30 PSF	563.0 LB/FT	262.6 LB/FT	6.0"	6.0"	6.0"	6.0"	6.0"	4.8"	6.0"	6.0"	4.6"	3.4"	2.9"	3.5"	6.0"	6.0"	6.0"	6.0"	6.0"
	+/- 35 PSF	692.4 LB/FT	328.5 LB/FT	5.3"	5.8"	6.0"	6.0"	6.0"		6.0"	6.0"	3.7"	2.7"	2.4"	2.8"	5.3"	5.6"	6.0"	6.0"	6.0"
	+/- 40 PSF	821.4 LB/FT	411.8 LB/FT	4.4"	4.8"	6.0"	6.0"	6.0"		5.8"	5.4"	3.1"	2.3"	2.0"	2.4"	4.4"	4.5"	6.0"	6.0"	6.0"
	+/- 45 PSF	950.1 LB/FT	501.7 LB/FT		4.1"	6.0"	6.0"	5.5"			4.6"		2.0"		2.0"	3.7"	3.7"	6.0"	6.0"	6.0"
	+/- 50 PSF	1078.5 LB/FT	597.8 LB/FT		3.6"	6.0"	5.9"	4.8"			4.0"					3.1"	3.2"	6.0"	6.0"	6.0"
	+/- 60 PSF	1334.0 LB/FT	808.4 LB/FT				4.6"				3.1"					2.4"	2.4"	6.0"	6.0"	6.0"
	+/- 70 PSF	1588.0 LB/FT	1042.3 LB/FT															6.0"	6.0"	6.0"
	+/- 90 PSF	2091.1 LB/FT	1573.9 LB/FT															5.8"		6.0"
	+/- 105 PSF	2463.8 LB/FT	2023.0 LB/FT															4.8"		
	+/- 120 PSF	2832.3 LB/FT	2510.1 LB/FT																	
150"	+/- 30 PSF	860.1 LB/FT	369.4 LB/FT	4.4"	4.8"	6.0"	6.0"	6.0"		5.9"	5.5"	3.1"	2.2"		2.3"	4.5"	4.8"	6.0"	6.0"	6.0"
	+/- 35 PSF	1027.6 LB/FT	467.1 LB/FT		4.0"	6.0"	6.0"	5.3"			4.5"					3.7"	3.9"	6.0"	6.0"	6.0"
	+/- 40 PSF	1194.4 LB/FT	572.7 LB/FT		3.4"	5.7"	5.6"	4.5"			3.8"					3.1"	3.2"	6.0"	6.0"	6.0"
	+/- 45 PSF	1360.6 LB/FT	686.1 LB/FT			5.0"	4.9"				3.3"					2.6"	2.7"	6.0"	6.0"	6.0"
	+/- 50 PSF	1526.2 LB/FT	807.0 LB/FT				4.3"									2.3"	2.3"	6.0"	6.0"	6.0"
	+/- 60 PSF	1855.4 LB/FT	1070.7 LB/FT															6.0"	6.0"	6.0"
	+/- 67 PSF	2081.0 LB/FT	1269.2 LB/FT															6.0"	6.0"	6.0"
170"	+/- 30 PSF	1102.8 LB/FT	461.8 LB/FT		3.8"	6.0"	6.0"	5.1"			4.3"					3.6"	3.8"	6.0"	6.0"	6.0"
	+/- 35 PSF	1304.1 LB/FT	578.8 LB/FT		3.1"	5.4"	5.3"	4.2"			3.6"					2.9"	3.1"	6.0"	6.0"	6.0"
	+/- 40 PSF	1504.5 LB/FT	705.2 LB/FT				4.5"				3.0"					2.5"	2.6"	6.0"	6.0"	6.0"
	+/- 45 PSF	1704.0 LB/FT	840.9 LB/FT													2.1"	2.2"	6.0"	6.0"	6.0"
	+/- 50 PSF	1902.6 LB/FT	985.6 LB/FT															6.0"	6.0"	6.0"
	+/- 62 PSF	2379.0 LB/FT	1372.1 LB/FT															5.5"		6.0"
200"	+/- 30 PSF	1471.3 LB/FT	600.9 LB/FT				4.8"				3.2"					2.7"	2.9"	6.0"	6.0"	6.0"
	+/- 35 PSF	1726.7 LB/FT	750.2 LB/FT				4.0"									2.2"	2.4"	6.0"	6.0"	6.0"
	+/- 40 PSF	1980.6 LB/FT	911.9 LB/FT														2.0"	6.0"	6.0"	6.0"
	+/- 45 PSF	2233.1 LB/FT	1085.8 LB/FT															6.0"	6.0"	6.0"
	+/- 57 PSF	2822.2 LB/FT	1542.7 LB/FT															4.7"		6.0"
220"	+/- 30 PSF	1723.6 LB/FT	697.0 LB/FT				4.1"									2.3"	2.5"	6.0"	6.0"	6.0"
	+/- 35 PSF	2017.0 LB/FT	870.3 LB/FT														2.0"	6.0"	6.0"	6.0"
	+/- 40 PSF	2308.5 LB/FT	1058.4 LB/FT															6.0"	6.0"	6.0"
	+/- 45 PSF	2597.8 LB/FT	1260.9 LB/FT															5.3"		6.0"
	+/- 54 PSF	3113.0 LB/FT	1660.8 LB/FT																	
256.5"	+/- 30 PSF	2201.6 LB/FT	883.9 LB/FT														2.0"	6.0"	6.0"	6.0"
	+/- 35 PSF	2567.9 LB/FT	1106.4 LB/FT															5.5"		6.0"
	+/- 40 PSF	2930.9 LB/FT	1348.8 LB/FT															4.8"		6.0"
	+/- 45 PSF	3290.4 LB/FT	1610.5 LB/FT																	
	+/- 50 PSF	3646.2 LB/FT	1891.2 LB/FT																	

FRANK L. BENNARDO, P.E.
0296004
STATE OF TEXAS
02/18/2015
FRANK L. BENNARDO
CERT OF REGISTRATION
LICENSED PROFESSIONAL ENGINEER
FRANK L. BENNARDO, P.E.
160 SW 12th AVENUE, #106
DEERFIELD BEACH, FL 33442
PH: (954) 354-0660 FAX: (954) 354-0445
POWERED BY THE INNOVATORS @ ENGINEERS EXPRESS
EXPERIENCE MORE AT WWW.ENGXPRESS.COM

Town & Country INDUSTRIES
Wholesale Aluminum and Building Products
A Division of ABC Supply Co., Inc.
400 WEST MCNAB ROAD
FT. LAUDERDALE, FL 33309

REMARKS	DRWN	CHKD	DATE
INIT ISSUE	KL	FLB	05/30/13
REVISE RIVETS	CSL	TSB	02/09/14

THIS DOCUMENT IS THE PROPERTY OF FRANK L. BENNARDO P.E. AND SHALL NOT BE REPRODUCED IN WHOLE OR PART WITHOUT WRITTEN CONSENT OF FRANK L. BENNARDO, P.E. * ALTERATIONS, ADDITIONS, HIGHLIGHTING, OR OTHER MARKINGS TO THIS DOCUMENT ARE NOT PERMITTED AND INVALIDATE OUR CERTIFICATION.

COPYRIGHT FRANK L. BENNARDO P.E.

14-1765

SCALE: -

PAGE DESCRIPTION:
-
-

V:\Projects\14-1765 FL 14235 - Revise Rivet Locations for TDI 214-Resubmit Eval\WP\14-1765_a Maestroshield Roll-up.dwg
02/18/2015 - 11:12am

ANCHOR SCHEDULE: END RETENTION INTERIOR MOUNT

ANCHOR NOTES: SEE SHEET 5 FOR ANCHOR NOTES.

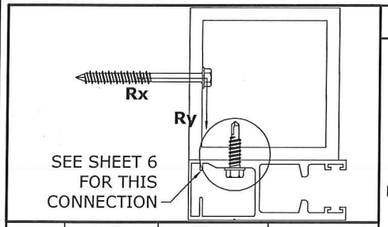

MAXIMUM SPACING (O.C.)

SLAT SPAN	DESIGN PRESSURE	Rx	Ry	1/4" ELCO ULTRACON TO 2700 PSI MIN. CONCRETE; 1.75" MIN. EMBEDMENT; 2.5" MIN. EDGE DISTANCE	1/4" SS ITW TAPCON TO 3192 PSI MIN. CONCRETE; 1.75" MIN. EMBEDMENT; 2.5" MIN. EDGE DISTANCE	5/16" ELCO ULTRACON TO 3500 PSI MIN. CONCRETE; 2" MIN. EMBEDMENT; 3.125" MIN. EDGE DISTANCE	5/16" ITW TAPCON: TO 2899 PSI MIN. CONCRETE; 2.25" MIN. EMBEDMENT; 3.125" MIN. EDGE DISTANCE	5/16" ITW TAPCON: TO GROUT-FILLED CONCRETE BLOCK; 2.25" MIN. EMBEDMENT; 4" MIN. EDGE DISTANCE	5/16" ITW TAPCON: TO HOLLOW CONCRETE BLOCK; 1.75" MIN. EMBEDMENT; 4" MIN. EDGE DISTANCE	1/4" POWERS POWER-BOLT TO 3000 PSI MIN. CONCRETE; 2.5" MIN. EMBEDMENT; 3" MIN. EDGE DISTANCE	1/4" ALL-POINTS SOLID-SET: TO 3000 PSI MIN. CONCRETE; 0.875" MIN. EMBEDMENT; 3" MIN. EDGE DISTANCE	1/4" ALL-POINTS SOLID-SET: TO HOLLOW BLOCK; 0.875" MIN. EMBEDMENT; 3" MIN. EDGE DISTANCE	1/4" LAG SCREW TO G=0.55 MIN WOOD; 1.5" MIN. EMBEDMENT; 0.75" MIN. EDGE DISTANCE	5/16" LAG SCREW TO G=0.42 MIN WOOD; 2" MIN. EMBEDMENT; 0.75" MIN. EDGE DISTANCE	#14 WOOD SCREW TO G=0.55 MIN WOOD; 1.5" MIN. EMBEDMENT; 0.75" MIN. EDGE DISTANCE	#14 410 SS SMS W/ FULL THREAD PENETRATION OR 1/4-20 410 SS THRU-BOLT TO 0.125" MIN. 6063-T6 ALUM; 0.5" MIN. EDGE DISTANCE	5/16" 410 SS SMS W/ FULL THREAD PENETRATION OR 5/16-18 410 SS THRU-BOLT TO 0.25" MIN. 6063-T6 ALUM; 0.625" MIN. EDGE DISTANCE	3/8" POWERS WEDGE BOLT TO 3000 PSI MIN. CONCRETE; 3.5" MIN. EMBEDMENT; 4.5" MIN. EDGE DISTANCE	3/8" ELCO CONFLEX: TO 1819 PSI MIN. CONCRETE; 3.5" MIN. EMBEDMENT; 3.75" MIN. EDGE DISTANCE	3/8" ELCO CONFLEX: TO 4510 PSI MIN. CONCRETE; 3.5" MIN. EMBEDMENT; 3.75" MIN. EDGE DISTANCE
81"	+/- 45 PSF	177.8 LB/FT	151.9 LB/FT	6.0"	6.0"	6.0"	6.0"	6.0"	6.0"	6.0"	6.0"	6.0"	6.0"	6.0"	6.0"	6.0"	6.0"	6.0"	6.0"
	+/- 50 PSF	256.0 LB/FT	168.8 LB/FT	6.0"	6.0"	6.0"	6.0"	6.0"	6.0"	6.0"	6.0"	6.0"	6.0"	6.0"	6.0"	6.0"	6.0"	6.0"	6.0"
	+/- 60 PSF	412.3 LB/FT	202.5 LB/FT	6.0"	6.0"	6.0"	6.0"	6.0"	5.0"	6.0"	6.0"	6.0"	6.0"	6.0"	6.0"	5.7"	6.0"	6.0"	6.0"
	+/- 70 PSF	568.2 LB/FT	236.3 LB/FT	6.0"	6.0"	6.0"	6.0"	6.0"		6.0"	6.0"	4.7"	5.4"	4.9"	5.1"	4.7"	4.2"	6.0"	6.0"	6.0"
	+/- 80 PSF	723.7 LB/FT	270.0 LB/FT	5.6"	6.0"	6.0"	6.0"	6.0"		6.0"	6.0"	3.8"	4.5"	4.1"	4.2"	3.8"	3.3"	6.0"	6.0"	6.0"
	+/- 90 PSF	879.0 LB/FT	303.8 LB/FT	4.7"	5.3"	6.0"	6.0"	6.0"		5.3"	5.6"	3.2"	3.9"	3.6"	3.6"	3.1"	2.7"	6.0"	6.0"	6.0"
	+/- 105 PSF	1111.1 LB/FT	354.4 LB/FT		4.3"	6.0"	6.0"	5.9"			4.5"		3.2"	3.0"	3.0"	2.5"	2.2"	6.0"	6.0"	6.0"
	+/- 120 PSF	1345.8 LB/FT	409.9 LB/FT		3.6"	5.7"	5.5"	4.9"			3.8"		2.7"	2.5"	2.5"	2.1"		6.0"	6.0"	6.0"
102"	+/- 30 PSF	321.3 LB/FT	127.5 LB/FT	6.0"	6.0"	6.0"	6.0"	6.0"	6.0"	6.0"	6.0"	6.0"	6.0"	6.0"	6.0"	6.0"	6.0"	6.0"	6.0"	6.0"
	+/- 35 PSF	430.1 LB/FT	148.8 LB/FT	6.0"	6.0"	6.0"	6.0"	6.0"	5.0"	6.0"	6.0"	6.0"	6.0"	6.0"	6.0"	6.0"	5.6"	6.0"	6.0"	6.0"
	+/- 40 PSF	538.8 LB/FT	170.0 LB/FT	6.0"	6.0"	6.0"	6.0"	6.0"	4.1"	6.0"	6.0"	5.4"	6.0"	6.0"	6.0"	5.1"	4.5"	6.0"	6.0"	6.0"
	+/- 45 PSF	647.2 LB/FT	191.3 LB/FT	6.0"	6.0"	6.0"	6.0"	6.0"		6.0"	6.0"	4.5"	5.7"	5.3"	5.2"	4.3"	3.8"	6.0"	6.0"	6.0"
	+/- 50 PSF	755.5 LB/FT	212.5 LB/FT	5.8"	6.0"	6.0"	6.0"	6.0"		6.0"	6.0"	3.9"	5.0"	4.7"	4.6"	3.7"	3.2"	6.0"	6.0"	6.0"
	+/- 60 PSF	980.1 LB/FT	267.8 LB/FT	4.5"	5.1"	6.0"	6.0"	6.0"		5.0"	5.3"	3.0"	3.9"	3.7"	3.6"	2.9"	2.5"	6.0"	6.0"	6.0"
	+/- 70 PSF	1225.9 LB/FT	355.9 LB/FT		4.0"	6.0"	6.0"	5.5"			4.2"		3.0"	2.8"	2.8"	2.3"	2.0"	6.0"	6.0"	6.0"
	+/- 90 PSF	1732.2 LB/FT	557.9 LB/FT				4.2"						2.0"					6.0"	6.0"	6.0"
	+/- 105 PSF	2123.7 LB/FT	730.1 LB/FT															6.0"	6.0"	6.0"
	+/- 120 PSF	2524.1 LB/FT	918.5 LB/FT															6.0"		6.0"
126"	+/- 30 PSF	668.1 LB/FT	157.5 LB/FT	6.0"	6.0"	6.0"	6.0"	6.0"		6.0"	6.0"	4.6"	6.0"	5.8"	5.6"	4.3"	3.7"	6.0"	6.0"	6.0"
	+/- 35 PSF	823.8 LB/FT	197.0 LB/FT	5.5"	6.0"	6.0"	6.0"	6.0"		6.0"	6.0"	3.7"	4.9"	4.7"	4.5"	3.5"	3.0"	6.0"	6.0"	6.0"
	+/- 40 PSF	986.2 LB/FT	247.0 LB/FT	4.6"	5.2"	6.0"	6.0"	6.0"		5.0"	5.3"	3.1"	4.0"	3.8"	3.7"	2.9"	2.5"	6.0"	6.0"	6.0"
	+/- 45 PSF	1150.9 LB/FT	300.9 LB/FT		4.4"	6.0"	6.0"	6.0"			4.5"		3.4"	3.2"	3.1"	2.5"	2.1"	6.0"	6.0"	6.0"
	+/- 50 PSF	1317.7 LB/FT	358.6 LB/FT		3.8"	6.0"	5.7"	5.2"			3.9"		2.9"	2.7"	2.7"	2.1"		6.0"	6.0"	6.0"
	+/- 60 PSF	1657.5 LB/FT	485.0 LB/FT		3.0"		4.5"	4.0"			3.1"		2.2"	2.1"	2.1"			6.0"	6.0"	6.0"
	+/- 70 PSF	2005.1 LB/FT	625.2 LB/FT															6.0"	6.0"	6.0"
	+/- 90 PSF	2720.8 LB/FT	944.1 LB/FT															6.0"		6.0"
	+/- 105 PSF	3273.2 LB/FT	1213.6 LB/FT															5.3"		6.0"
	+/- 120 PSF	3836.6 LB/FT	1505.7 LB/FT																	
150"	+/- 30 PSF	1008.0 LB/FT	221.6 LB/FT	4.6"	5.2"	6.0"	6.0"	6.0"		5.0"	5.3"	3.1"	4.2"	4.0"	3.8"	2.8"	2.4"	6.0"	6.0"	6.0"
	+/- 35 PSF	1214.5 LB/FT	280.2 LB/FT		4.3"	6.0"	6.0"	5.8"			4.4"		3.4"	3.2"	3.1"	2.3"	2.0"	6.0"	6.0"	6.0"
	+/- 40 PSF	1423.5 LB/FT	343.6 LB/FT		3.6"	5.7"	5.4"	4.9"			3.7"		2.8"	2.7"	2.6"	2.0"		6.0"	6.0"	6.0"
	+/- 45 PSF	1635.1 LB/FT	411.6 LB/FT		3.1"		4.7"	4.2"			3.2"		2.4"	2.3"	2.2"			6.0"	6.0"	6.0"
	+/- 50 PSF	1849.1 LB/FT	484.1 LB/FT				4.1"						2.1"	2.0"				6.0"	6.0"	6.0"
	+/- 60 PSF	2283.8 LB/FT	642.3 LB/FT															6.0"	6.0"	6.0"
	+/- 67 PSF	2588.8 LB/FT	761.4 LB/FT															6.0"		6.0"
170"	+/- 30 PSF	1287.5 LB/FT	277.0 LB/FT		4.1"	6.0"	6.0"	5.6"			4.2"		3.3"	3.2"	3.0"	2.2"		6.0"	6.0"	6.0"
	+/- 35 PSF	1535.7 LB/FT	347.2 LB/FT		3.4"	5.4"	5.1"	4.6"			3.5"		2.7"	2.6"	2.5"			6.0"	6.0"	6.0"
	+/- 40 PSF	1786.7 LB/FT	423.1 LB/FT				4.3"				3.0"		2.3"	2.2"	2.1"			6.0"	6.0"	6.0"
	+/- 45 PSF	2040.5 LB/FT	504.4 LB/FT										2.0"					6.0"	6.0"	6.0"
	+/- 50 PSF	2297.0 LB/FT	591.3 LB/FT															6.0"	6.0"	6.0"
	+/- 62 PSF	2928.0 LB/FT	823.1 LB/FT															6.0"		6.0"
200"	+/- 30 PSF	1711.7 LB/FT	360.5 LB/FT		3.1"		4.6"	4.2"			3.2"		2.5"	2.4"	2.3"			6.0"	6.0"	6.0"
	+/- 35 PSF	2026.8 LB/FT	450.0 LB/FT										2.1"	2.0"				6.0"	6.0"	6.0"
	+/- 40 PSF	2345.5 LB/FT	547.0 LB/FT															6.0"	6.0"	6.0"
	+/- 45 PSF	2667.5 LB/FT	651.3 LB/FT															6.0"	6.0"	6.0"
	+/- 57 PSF	3439.5 LB/FT	925.4 LB/FT															5.5"		6.0"
220"	+/- 30 PSF	2002.5 LB/FT	418.1 LB/FT				4.0"						2.2"	2.1"				6.0"	6.0"	6.0"
	+/- 35 PSF	2365.3 LB/FT	522.1 LB/FT															6.0"	6.0"	6.0"
	+/- 40 PSF	2732.0 LB/FT	634.9 LB/FT															6.0"		6.0"
	+/- 45 PSF	3102.4 LB/FT	756.4 LB/FT															6.0"		6.0"
	+/- 54 PSF	3777.5 LB/FT	996.3 LB/FT															5.1"		
256.5"	+/- 30 PSF	2555.3 LB/FT	530.2 LB/FT															6.0"	6.0"	6.0"
	+/- 35 PSF	3010.6 LB/FT	663.7 LB/FT															6.0"		6.0"
	+/- 40 PSF	3470.6 LB/FT	809.1 LB/FT															5.7"		6.0"
	+/- 45 PSF	3934.8 LB/FT	966.1 LB/FT															5.0"		
	+/- 50 PSF	4402.9 LB/FT	1134.5 LB/FT																	

FRANK L. BENNARDO, P.E.
PE96064
STATE OF TEXAS
02/18/2015
FRANK L. BENNARDO
CERT OF REG. #F-1383
LICENSED
PROFESSIONAL ENGINEER
96064

FRANK L. BENNARDO P.E.
160 SW 12th AVENUE #106
DEERFIELD BEACH, FL 33442
Ph: (954) 354-0660 Fax: (954) 354-0443
POWERED BY THE INNOVATORS AT ENGINEERING EXPRESS
EXPERIENCE MORE AT WWW.EXPRESS.COM

Town & Country INDUSTRIES
Wholesale Aluminum and Building Products
A Division of ABC Supply Co., Inc.
400 WEST MCNAB ROAD
FT. LAUDERDALE, FL 33309

REMARKS	DRWN	CHKD	DATE
INIT ISSUE	KL	FLB	05/30/13
REVISE RIVETS	CSL	TSB	02/09/14

THIS DOCUMENT IS THE PROPERTY OF FRANK L. BENNARDO P.E. AND SHALL NOT BE REPRODUCED IN WHOLE OR PART WITHOUT WRITTEN CONSENT OF FRANK L. BENNARDO, P.E. * ALTERATIONS, ADDITIONS, HIGHLIGHTING, OR OTHER MARKINGS TO THIS DOCUMENT ARE NOT PERMITTED AND INVALIDATE OUR CERTIFICATION.

COPYRIGHT FRANK L. BENNARDO P.E.

14-1765

SCALE: -

PAGE DESCRIPTION:
-
-

V:\Projects\14-1765 FL 14235 - Revise Rivet Locations for TDI 214-Resubmit Eval\WP\14-1765_a Maestroshield Roll-up.dwg
02/18/2015 - 11:12am

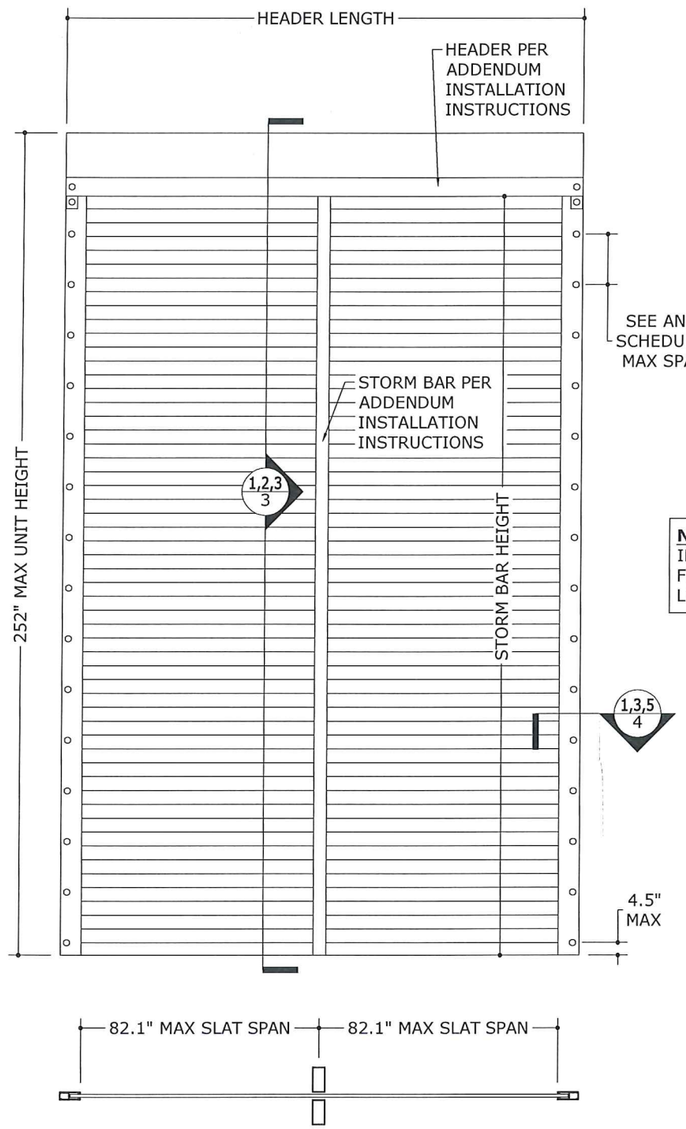

NOTE: SEE ADDENDUM INSTALLATION INSTRUCTIONS FOR STORM BAR AND HEADER LIMITATIONS.

1/9 NON-END RETENTION SHUTTER WITH STORM BARS (DOUBLE-SPAN)

N.T.S. EXTERIOR ELEV

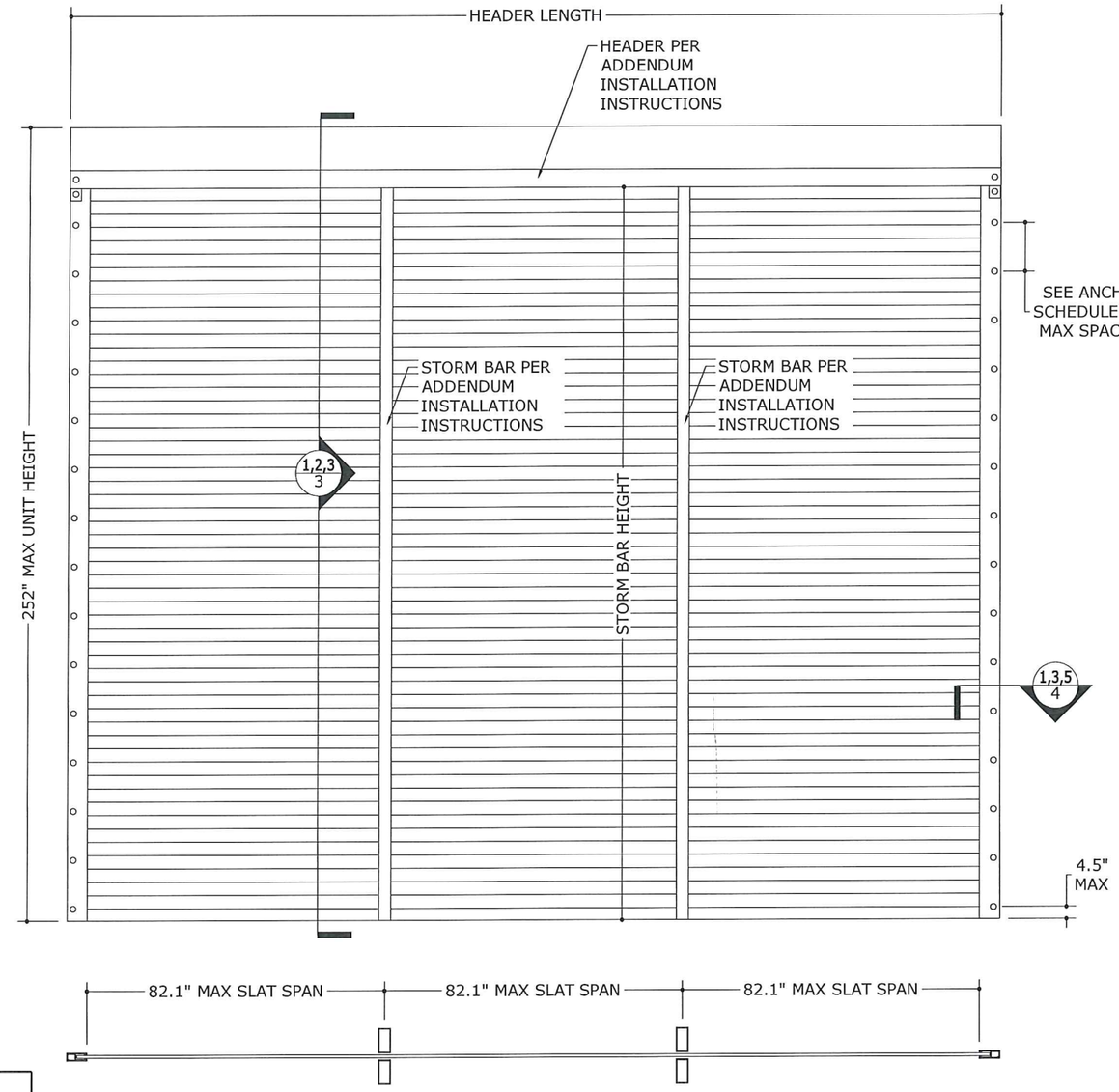

2/9 NON-END RETENTION SHUTTER WITH STORM BARS (TRIPLE-SPAN)

N.T.S. EXTERIOR ELEV

TABLE 5

NON-END RETENTION WITH INTERIOR AND EXTERIOR STORM BARS

SLAT SPAN	ALLOWABLE DESIGN PRESSURE
47.1"	+/- 120.0 PSF
50.0"	+/- 104.2 PSF
55.0"	+/- 82.0 PSF
60.0"	+/- 60.3 PSF
65.0"	+/- 45.5 PSF
70.0"	+/- 34.3 PSF
75.0"	+/- 26.3 PSF
80.0"	+/- 20.5 PSF
82.1"	+/- 18.6 PSF

FRANK L. BENNARDO, P.E.
#PE9606
STATE OF TEXAS
02/18/2015
FRANK L. BENNARDO
CERT. OF REG. #F-11383
PROFESSIONAL ENGINEER
06064
LICENSED
FRANK L. BENNARDO, P.E.
160 SW 12th AVENUE #406
DEERFIELD BEACH, FL 33441
PH: (954) 354-0660 FAX: (954) 354-0441
POWERED BY THE INNOVATIONS
ENGINEERING EXPRESS
EXPERIENCE MORE AT WWW.ENGEXP.COM

Town & Country INDUSTRIES
Wholesale Aluminum and Building Products
A Division of ABC Supply Co., Inc.
400 WEST MCNAB ROAD
FT. LAUDERDALE, FL 33309

REMARKS	DRWN	CHKD	DATE
INIT ISSUE	KL	FLB	05/30/13
REVISE RIVETS	CSL	TSB	02/09/14
-	-	-	-
-	-	-	-
-	-	-	-

THIS DOCUMENT IS THE PROPERTY OF FRANK L. BENNARDO, P.E AND SHALL NOT BE REPRODUCED IN WHOLE OR PART WITHOUT WRITTEN CONSENT OF FRANK L. BENNARDO, P.E. ** ALTERATIONS, ADDITIONS, HIGHLIGHTING, OR OTHER MARKINGS TO THIS DOCUMENT ARE NOT PERMITTED AND INVALIDATE OUR CERTIFICATION.

COPYRIGHT FRANK L. BENNARDO P.E.

14-1765

SCALE: -

PAGE DESCRIPTION:
-
-

V:\Projects\14-1765 FL 14235 - Revise Rivet Locations for TDI 214-Resubmit Eval\WP\14-1765_a Maestroshield Roll-up.dwg
02/18/2015 - 11:12am

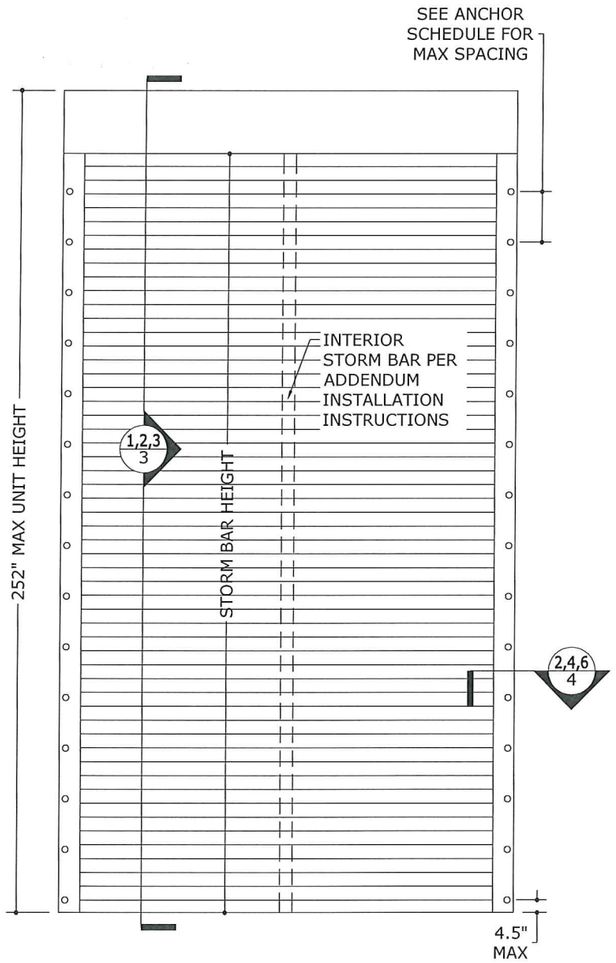

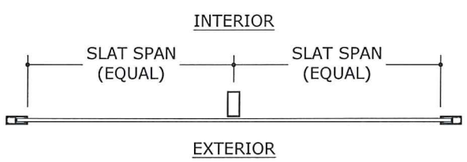

TABLE 6
MINIMUM GLAZING SEPARATION
END-RETENTION SHUTTER WITH INTERIOR STORM BARS
(WIND ZONE 4 ONLY)

SLAT SPAN	SPAN TYPE	POSITIVE DESIGN PRESSURE	INSTALLATIONS ≤ 30' ABOVE GRADE	INSTALLATIONS > 30' ABOVE GRADE
48.5"	DOUBLE SPAN	+ 30 PSF	3.7"	3.7"
		+ 40 PSF	3.7"	3.7"
		+ 50 PSF	3.7"	3.7"
		+ 60 PSF	3.7"	3.7"
		+ 70 PSF	3.7"	3.7"
55.0"	DOUBLE SPAN	+ 30 PSF	3.9"	3.9"
		+ 40 PSF	3.9"	3.9"
		+ 50 PSF	3.9"	3.9"
		+ 60 PSF	3.9"	3.9"
		+ 70 PSF	3.9"	3.9"
73.0"	DOUBLE SPAN	+ 30 PSF	4.6"	4.3"
		+ 40 PSF	4.6"	4.3"
		+ 50 PSF	4.6"	4.4"
		+ 60 PSF	4.6"	4.6"
		+ 70 PSF	4.7"	4.7"
48.7"	TRIPLE SPAN	+ 30 PSF	3.2"	3.2"
		+ 40 PSF	3.2"	3.2"
		+ 50 PSF	3.2"	3.2"
		+ 60 PSF	3.2"	3.2"
		+ 70 PSF	3.2"	3.2"
64.7"	TRIPLE SPAN	+ 30 PSF	3.8"	3.5"
		+ 40 PSF	3.8"	3.5"
		+ 50 PSF	3.8"	3.5"
		+ 60 PSF	3.8"	3.7"
		+ 70 PSF	3.8"	3.8"

TABLE 6 NOTES:

- SLAT SPAN IS DEFINED 1/10 AND 2/10
- SEPARATION FROM GLAZING IS REQUIRED **ONLY** IN ASTM WIND ZONE 4 AND ESSENTIAL FACILITIES.
- LINEAR INTERPOLATION BETWEEN SHUTTER SPANS IS NOT PERMITTED. FOR SPANS BETWEEN THOSE INDICATED ABOVE, THE SEPARATION FROM GLASS FOR THE NEXT HIGHER SPAN SHALL BE USED.

1/10 END RETENTION SHUTTER WITH INTERIOR STORM BARS (DOUBLE-SPAN)
N.T.S. EXTERIOR ELEV

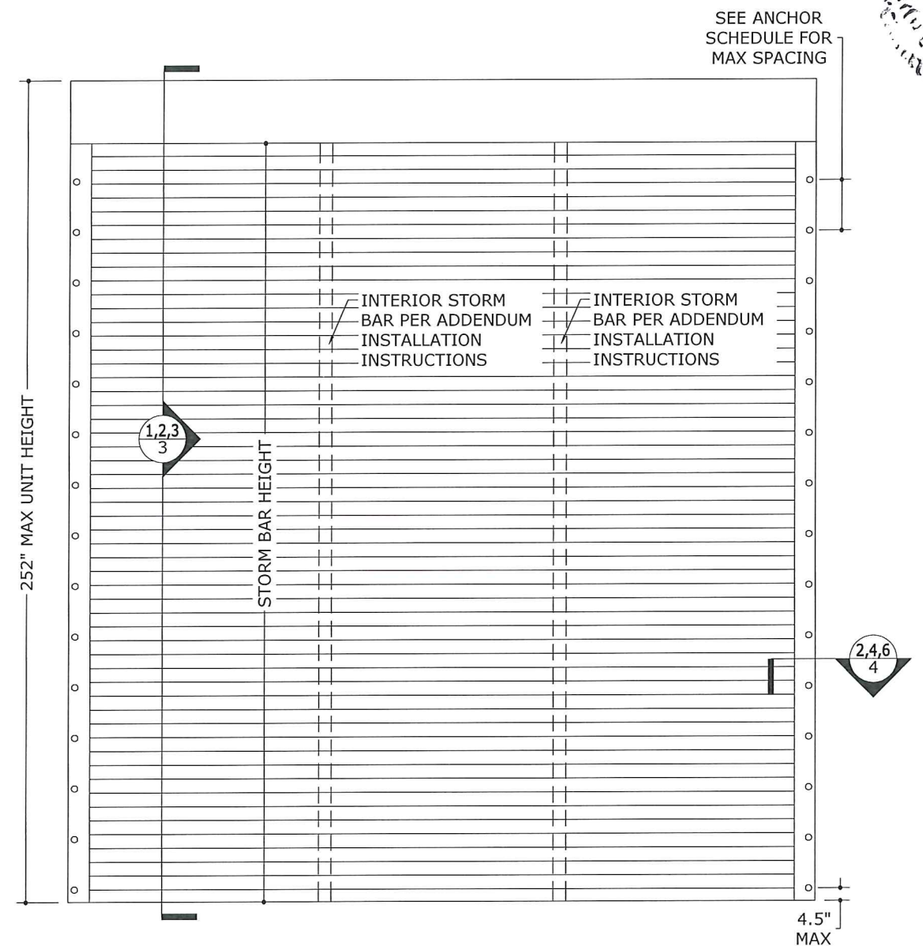

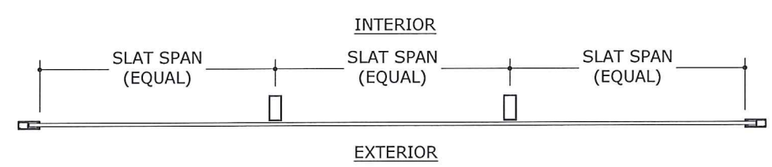

2/10 END RETENTION SHUTTER WITH INTERIOR STORM BARS (TRIPLE-SPAN)
N.T.S. EXTERIOR ELEV

FRANK L. BENNARDO, P.E.
#PE0047
STATE OF FLORIDA
02/18/2015
CERT OF AUTH #F-11383
FRANK L. BENNARDO, P.E.
160 SW 12th AVENUE #106
DEERFIELD BEACH, FL 33442
Ph: (954) 354-0660 FAX: (954) 354-0664
POWERED BY THE INNOVATORS OF ENGINEERING
ENGINEERS EXPRESS
EXPERIENCE MORE AT WWW.ENGEXP.COM

Town & Country INDUSTRIES
Wholesale Aluminum and Building Products
A Division of ABC Supply Co., Inc.
400 WEST MCNAB ROAD
FT. LAUDERDALE, FL 33309

REMARKS	DRWN	CHKD	DATE
INIT ISSUE	KL	FLB	05/30/13
REVISE RIVETS	CSL	TSB	02/09/14

THIS DOCUMENT IS THE PROPERTY OF FRANK L. BENNARDO, P.E. AND SHALL NOT BE REPRODUCED IN WHOLE OR IN PART WITHOUT WRITTEN CONSENT OF FRANK L. BENNARDO, P.E. * ALTERATIONS, ADDITIONS, HIGHLIGHTING, OR OTHER MARKINGS TO THIS DOCUMENT ARE NOT PERMITTED AND INVALIDATE OUR CERTIFICATION.
COPYRIGHT FRANK L. BENNARDO P.E.

14-1765
SCALE: -
PAGE DESCRIPTION:
-
-

V:\Projects\14-1765 FL 14235 - Revise Rivet Locations for TDI 214-Resubmit Eval\WP\14-1765_a Maestroshield Roll-up.dwg
02/18/2015 - 11:11am

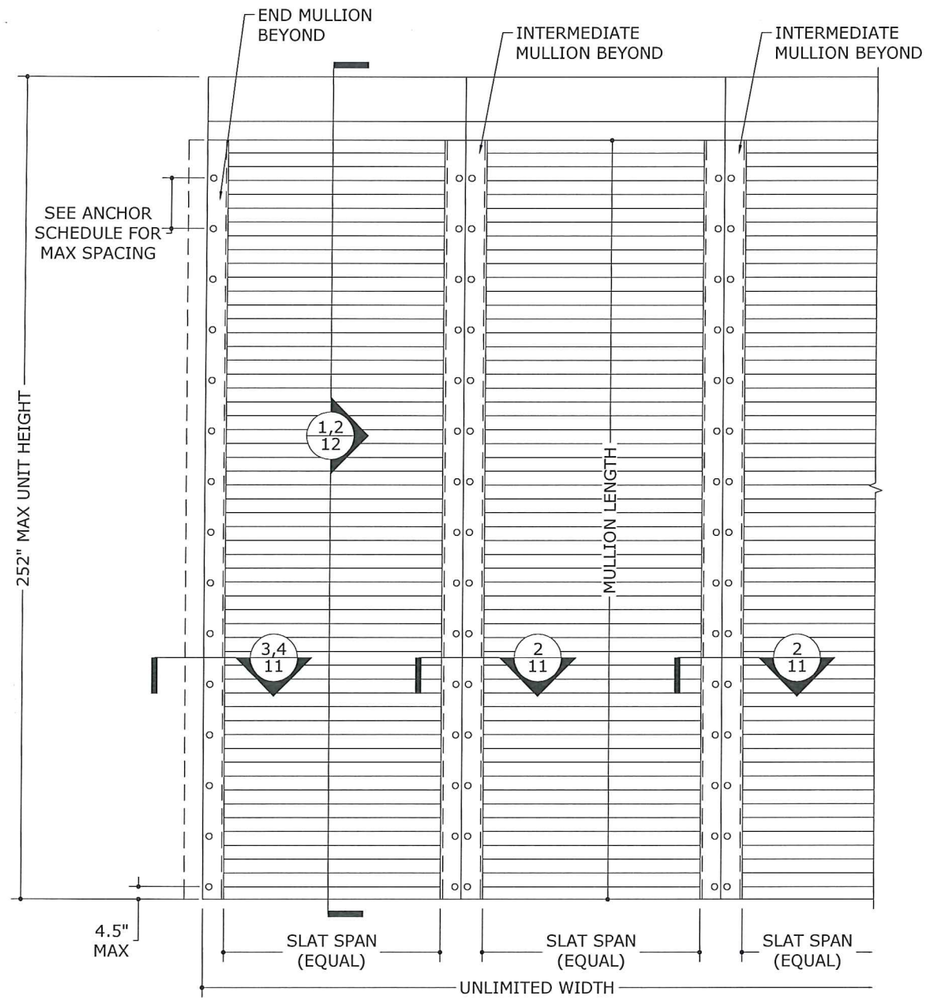

1/11 TYPICAL SHUTTER WITH MULLIONS

N.T.S. EXTERIOR ELEV

NOTE: NON-END RETENTION MULLIONS PER ADDENDUM INSTALLATION INSTRUCTIONS. END RETENTION MULLIONS PER MULLION SCHEDULES.

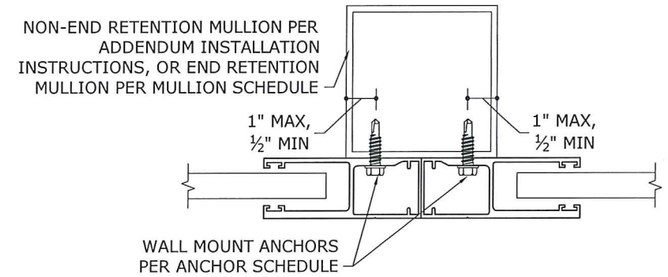

NOTE: NON-END RETENTION SHUTTER SHOWN HERE. END RETENTION SHUTTER WALL MOUNT TO MULLION SIMILAR, SEE DETAIL 2/4.

2/11 WALL MOUNT TO INTERMEDIATE MULLION

N.T.S. HORIZ SECTION

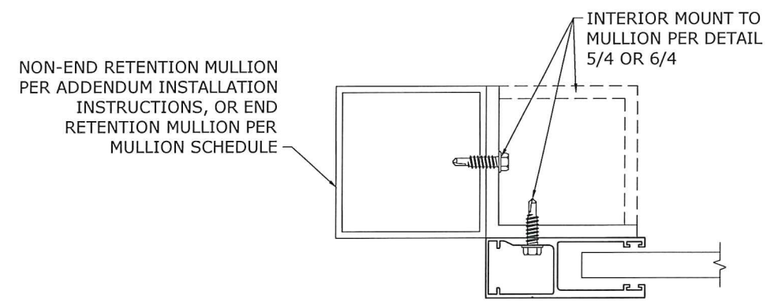

NOTE: NON-END RETENTION SHUTTER SHOWN HERE. END RETENTION SHUTTER INTERIOR MOUNT TO MULLION SIMILAR, SEE DETAIL 6/4.

3/11 INTERIOR MOUNT TO END MULLION

N.T.S. HORIZ SECTION

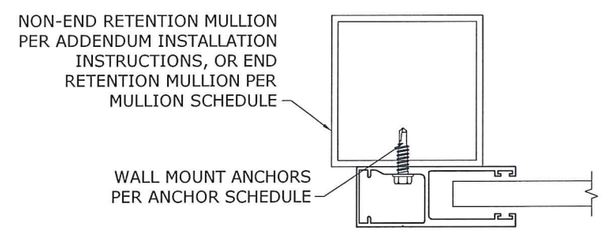

NOTE: NON-END RETENTION SHUTTER SHOWN HERE. END RETENTION SHUTTER WALL MOUNT TO MULLION SIMILAR, SEE DETAIL 2/4.

4/11 WALL MOUNT TO END MULLION

N.T.S. HORIZ SECTION

FRANK L. BENNARDO, P.E.
#91-9606
STATE OF TEXAS
02/18/2015
FRANK L. BENNARDO
CERT. OF REG. NO. 11383
LICENSED
PROFESSIONAL ENGINEER
FRANK L. BENNARDO, P.E.
160 SW 12th AVENUE #106
DEERFIELD BEACH, FL 33442
PH: (954) 354-0660 FAX: (954) 354-0461
POWERED BY THE INNOVATIONS OF
ENGINEERING EXPRESS
EXPERIENCE MORE AT WWW.ENGEXP.COM

Town & Country INDUSTRIES
Wholesale Aluminum and Building Products
A Division of ABC Supply Co., Inc.
400 WEST MCNAB ROAD
FT. LAUDERDALE, FL 33309

REMARKS	DRWN	CHKD	DATE
INIT ISSUE	KL	FLB	05/30/13
REVISE RIVETS	CSL	TSB	02/09/14
-	-	-	-
-	-	-	-
-	-	-	-

THIS DOCUMENT IS THE PROPERTY OF FRANK L. BENNARDO, P.E AND SHALL NOT BE REPRODUCED IN WHOLE OR PART WITHOUT WRITTEN CONSENT OF FRANK L. BENNARDO, P.E. ** ALTERATIONS, ADDITIONS, HIGHLIGHTING, OR OTHER MARKINGS TO THIS DOCUMENT ARE NOT PERMITTED AND INVALIDATE OUR CERTIFICATION.
COPYRIGHT FRANK L. BENNARDO P.E.

14-1765

SCALE: -

PAGE DESCRIPTION:
-
-

V:\Projects\14-1765 FL 14235 - Revise Rivet Locations for TDI 214-Resubmit Eval\WP\14-1765_a Maestroshield Roll-up.dwg
02/18/2015 - 11:11am

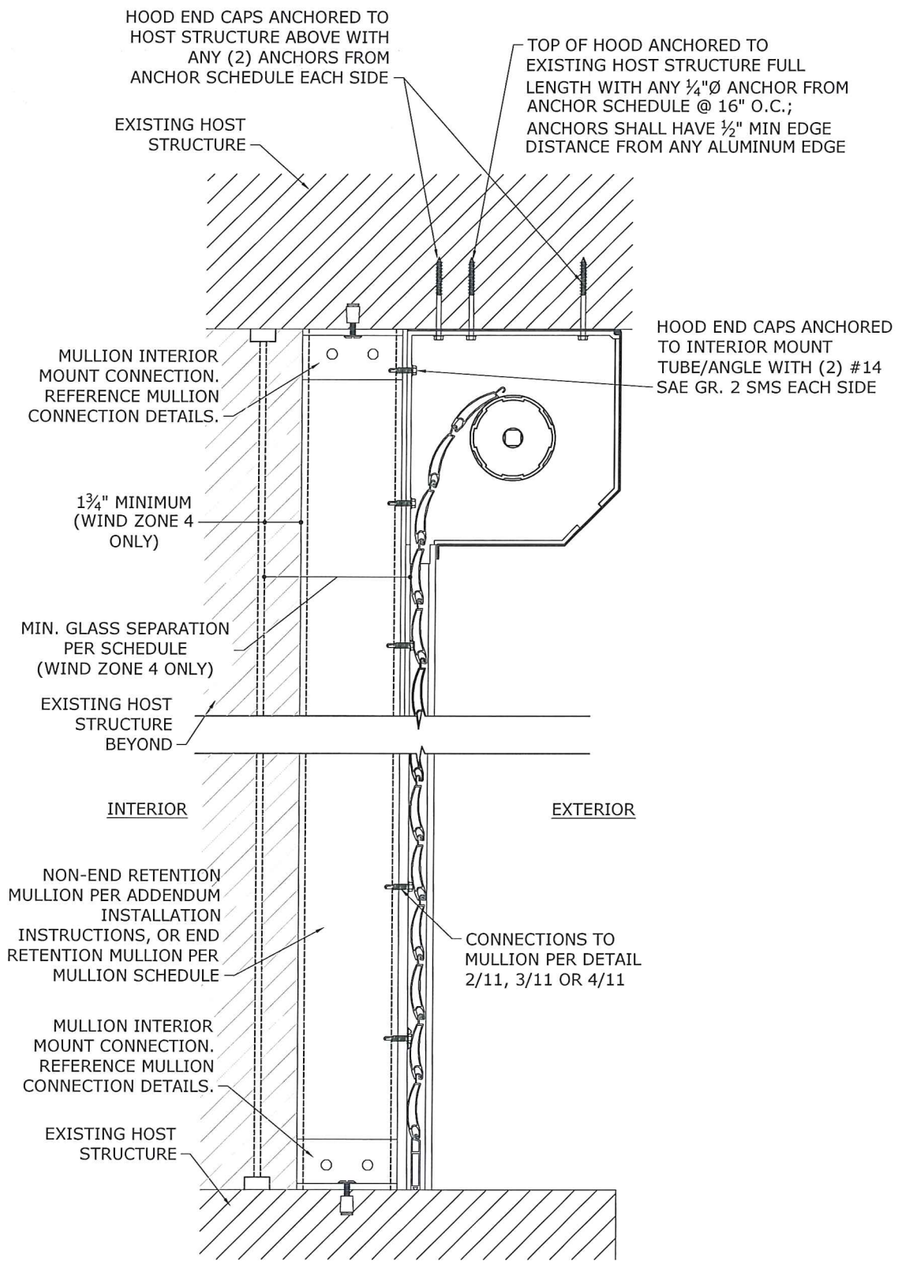

1/12 MULLION INTERIOR MOUNT
N.T.S. VERT SECTION

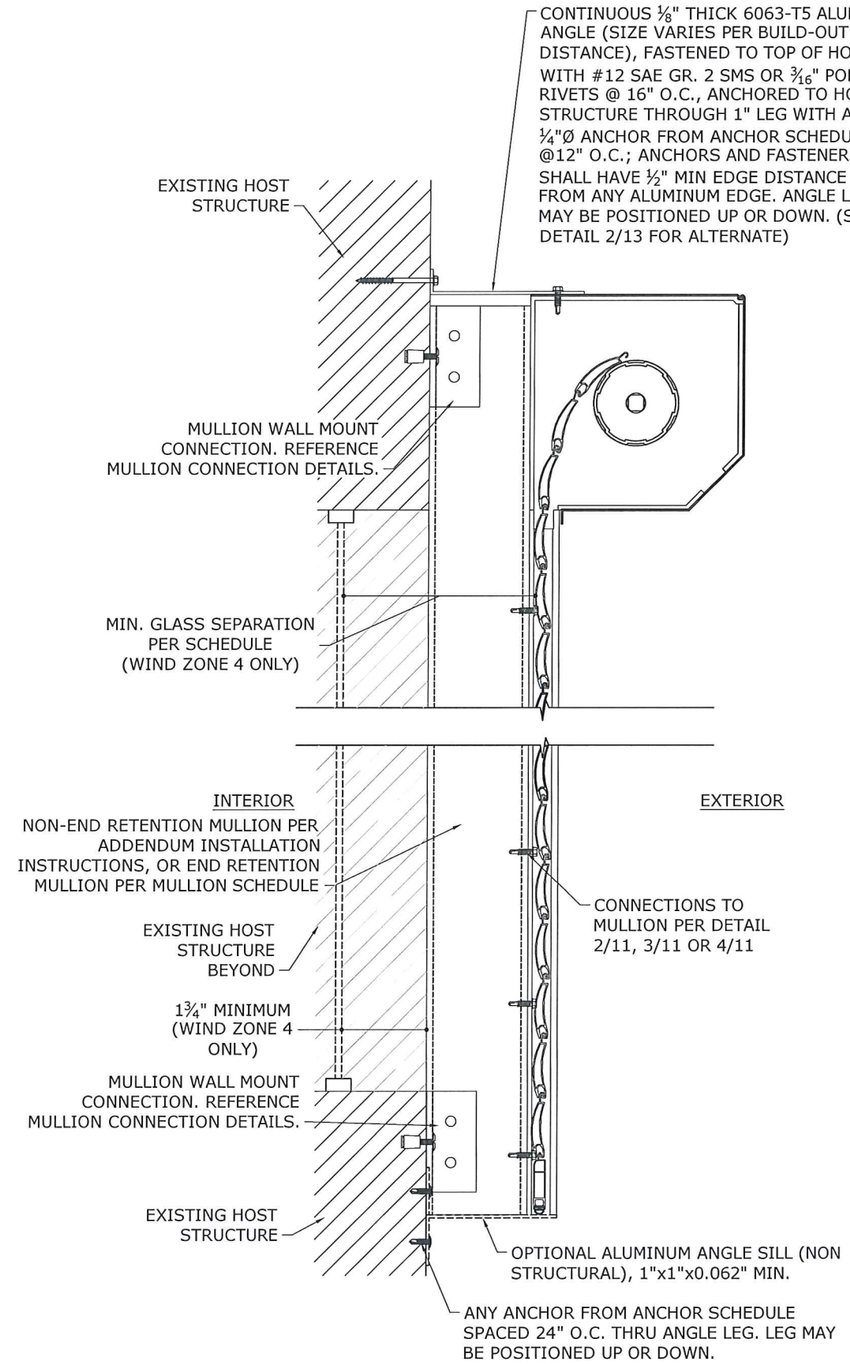

2/12 MULLION WALL MOUNT
N.T.S. VERT SECTION

FRANK L. BENNARDO, P.E.
ABE96064
STATE OF TEXAS
02/18/2015
FRANK L. BENNARDO
96064
LICENSED
PROFESSIONAL ENGINEER
PROFESSIONAL ENGINEER
FRANK L. BENNARDO, P.E.
160 SW 12th AVENUE, #106
DEERFIELD BEACH, FL 33442
PH: (954) 354-0660 FAX: (954) 354-0443
POWERED BY THE INNOVATIONS OF
ENGINEERING EXPRESS
EXPERIENCE MORE AT WWW.ENGEXP.COM

Town & Country INDUSTRIES
Wholesale Aluminum and Building Products
A Division of ABC Supply Co., Inc.
400 WEST MCNAB ROAD
FT. LAUDERDALE, FL 33309

REMARKS	DRWN	CHKD	DATE
INIT ISSUE	KL	FLB	05/30/13
REVISE RIVETS	CSL	TSB	02/09/14
-	-	-	-
-	-	-	-
-	-	-	-

THIS DOCUMENT IS THE PROPERTY OF FRANK L. BENNARDO, P.E AND SHALL NOT BE REPRODUCED IN WHOLE OR PART WITHOUT WRITTEN CONSENT OF FRANK L. BENNARDO, P.E. ** ALTERATIONS, ADDITIONS, HIGHLIGHTING, OR OTHER MARKINGS TO THIS DOCUMENT ARE NOT PERMITTED AND INVALIDATE OUR CERTIFICATION.
COPYRIGHT FRANK L. BENNARDO P.E.

14-1765
SCALE: -
PAGE DESCRIPTION:
-
-

V:\Projects\14-1765 FL 14235 - Revise Rivet Locations for TDI 214-Resubmit Eval\WP\14-1765_a Maestroshield Roll-up.dwg
02/18/2015 - 11:11am

END RETENTION MULLION SCHEDULE: INTERMEDIATE MULLIONS

SLAT SPAN	DESIGN PRESSURE	3"x3"x0.125" W/ 2.75"x2.75"x1/8" STEEL REINF.*		3"x3"x0.25"		4"x4"x0.125" W/ 3.75"x3.75"x1/8" STEEL REINF.*		4"x4"x0.25"		4"x6"x0.25"		4"x8"x0.25"	
		MAX MULLION LENGTH	END REACTION Rt	MAX MULLION LENGTH	END REACTION Rt	MAX MULLION LENGTH	END REACTION Rt	MAX MULLION LENGTH	END REACTION Rt	MAX MULLION LENGTH	END REACTION Rt	MAX MULLION LENGTH	END REACTION Rt
120"	+/- 30 PSF	102.3"	1123.3 LB	110.9"	1217.0 LB	120.0"	1317.4 LB	120.0"	1317.4 LB	120.0"	1317.4 LB	120.0"	1317.4 LB
	+/- 35 PSF	93.1"	1356.4 LB	100.9"	1469.5 LB	120.0"	1747.9 LB	120.0"	1747.9 LB	120.0"	1747.9 LB	120.0"	1747.9 LB
	+/- 40 PSF	86.0"	1589.4 LB	93.2"	1722.0 LB	116.1"	2144.8 LB	120.0"	2217.3 LB	120.0"	2217.3 LB	120.0"	2217.3 LB
	+/- 45 PSF	80.3"	1823.5 LB	87.0"	1975.6 LB	108.4"	2460.7 LB	112.6"	2556.8 LB	120.0"	2724.7 LB	120.0"	2724.7 LB
	+/- 50 PSF	75.6"	2058.9 LB	81.9"	2230.6 LB	102.0"	2778.3 LB	106.0"	2886.8 LB	120.0"	3269.0 LB	120.0"	3269.0 LB
	+/- 60 PSF	68.1"	2534.2 LB	73.8"	2745.6 LB	91.9"	3419.7 LB	95.5"	3553.3 LB	120.0"	4464.1 LB	120.0"	4464.1 LB
	+/- 70 PSF	62.5"	3015.4 LB	67.7"	3266.9 LB	84.3"	4067.9 LB	87.6"	4228.0 LB	117.9"	5690.6 LB	120.0"	5794.0 LB
	+/- 80 PSF	56.4"	3410.4 LB	62.8"	3793.6 LB	75.3"	4550.5 LB	81.3"	4909.5 LB	109.4"	6607.9 LB	120.0"	7250.0 LB
140"	+/- 30 PSF	90.1"	1449.4 LB	97.6"	1570.4 LB	120.0"	1930.9 LB	120.0"	1930.9 LB	120.0"	1930.9 LB	120.0"	1930.9 LB
	+/- 35 PSF	83.1"	1704.8 LB	90.0"	1847.0 LB	112.1"	2300.5 LB	116.5"	2390.4 LB	120.0"	2463.0 LB	120.0"	2463.0 LB
	+/- 40 PSF	77.4"	1961.1 LB	83.9"	2124.7 LB	104.5"	2646.3 LB	108.6"	2749.7 LB	120.0"	3038.8 LB	120.0"	3038.8 LB
	+/- 45 PSF	72.8"	2218.9 LB	78.9"	2403.9 LB	98.2"	2994.2 LB	102.1"	3111.1 LB	120.0"	3657.3 LB	120.0"	3657.3 LB
	+/- 50 PSF	68.9"	2478.4 LB	74.6"	2685.2 LB	93.0"	3344.4 LB	96.6"	3475.1 LB	120.0"	4317.4 LB	120.0"	4317.4 LB
	+/- 70 PSF	56.0"	3435.0 LB	62.5"	3830.1 LB	74.8"	4583.2 LB	80.9"	4956.8 LB	108.8"	6671.4 LB	120.0"	7354.9 LB
160"	+/- 30 PSF	82.7"	1719.4 LB	89.6"	1862.8 LB	111.6"	2320.1 LB	116.0"	2410.7 LB	120.0"	2494.6 LB	120.0"	2494.6 LB
	+/- 35 PSF	76.6"	2003.2 LB	83.0"	2170.3 LB	103.4"	2703.2 LB	107.4"	2808.8 LB	120.0"	3137.3 LB	120.0"	3137.3 LB
	+/- 40 PSF	71.7"	2288.9 LB	77.7"	2479.8 LB	96.7"	3088.6 LB	100.5"	3209.3 LB	120.0"	3831.7 LB	120.0"	3831.7 LB
	+/- 45 PSF	67.6"	2576.7 LB	73.2"	2791.6 LB	91.2"	3477.0 LB	94.7"	3612.8 LB	120.0"	4576.7 LB	120.0"	4576.7 LB
	+/- 50 PSF	64.0"	2866.9 LB	69.4"	3106.0 LB	86.4"	3868.6 LB	89.8"	4019.8 LB	120.0"	5371.3 LB	120.0"	5371.3 LB
	+/- 60 PSF	57.0"	3376.1 LB	63.2"	3742.7 LB	76.1"	4504.6 LB	81.8"	4843.7 LB	110.1"	6519.2 LB	120.0"	7104.7 LB
	+/- 70 PSF	50.6"	3804.5 LB	58.0"	4358.4 LB	67.5"	5076.3 LB	75.5"	5680.2 LB	101.7"	7645.1 LB	120.0"	9022.4 LB
180"	+/- 30 PSF	77.4"	1964.2 LB	83.8"	2128.0 LB	104.4"	2650.5 LB	108.5"	2754.0 LB	120.0"	3046.0 LB	120.0"	3046.0 LB
	+/- 35 PSF	71.8"	2280.1 LB	77.8"	2470.3 LB	96.9"	3076.8 LB	100.7"	3196.9 LB	120.0"	3809.6 LB	120.0"	3809.6 LB
	+/- 40 PSF	67.3"	2598.6 LB	72.9"	2815.4 LB	90.8"	3506.6 LB	94.3"	3643.6 LB	120.0"	4635.3 LB	120.0"	4635.3 LB
	+/- 45 PSF	63.5"	2920.2 LB	68.8"	3163.8 LB	85.6"	3940.5 LB	89.0"	4094.5 LB	119.8"	5510.8 LB	120.0"	5521.7 LB
	+/- 50 PSF	59.8"	3221.2 LB	65.2"	3515.5 LB	79.7"	4297.9 LB	84.4"	4549.7 LB	113.6"	6123.5 LB	120.0"	6467.7 LB
	+/- 60 PSF	52.0"	3699.9 LB	59.5"	4228.8 LB	69.4"	4936.6 LB	77.0"	5472.7 LB	103.6"	7365.9 LB	120.0"	8532.7 LB
200"	+/- 30 PSF	73.2"	2197.5 LB	79.3"	2380.8 LB	98.7"	2965.3 LB	102.6"	3081.1 LB	120.0"	3604.5 LB	120.0"	3604.5 LB
	+/- 35 PSF	67.9"	2547.9 LB	73.6"	2760.4 LB	91.7"	3438.2 LB	95.3"	3572.5 LB	120.0"	4500.3 LB	120.0"	4500.3 LB
	+/- 40 PSF	63.7"	2902.0 LB	69.0"	3144.1 LB	85.9"	3916.1 LB	89.3"	4069.0 LB	120.0"	5470.4 LB	120.0"	5470.4 LB
	+/- 45 PSF	59.6"	3232.5 LB	65.1"	3532.0 LB	79.5"	4313.1 LB	84.2"	4571.0 LB	113.3"	6152.3 LB	120.0"	6513.3 LB
	+/- 50 PSF	55.0"	3498.1 LB	61.7"	3924.1 LB	73.4"	4667.4 LB	79.9"	5078.5 LB	107.5"	6835.3 LB	120.0"	7627.5 LB
	+/- 60 PSF	47.9"	4017.9 LB	54.9"	4602.9 LB	63.9"	5361.0 LB	72.8"	6108.9 LB	98.0"	8222.1 LB	120.0"	10062.9 LB
220"	+/- 30 PSF	69.6"	2426.0 LB	75.4"	2628.4 LB	94.0"	3273.7 LB	97.6"	3401.6 LB	120.0"	4181.2 LB	120.0"	4181.2 LB
	+/- 35 PSF	64.7"	2813.1 LB	70.1"	3047.8 LB	87.3"	3796.1 LB	90.7"	3944.4 LB	120.0"	5220.9 LB	120.0"	5220.9 LB
	+/- 40 PSF	60.3"	3191.5 LB	65.6"	3472.4 LB	80.5"	4258.4 LB	84.9"	4493.9 LB	114.3"	6048.5 LB	120.0"	6349.1 LB
	+/- 45 PSF	55.3"	3483.5 LB	61.9"	3902.3 LB	73.7"	4647.9 LB	80.1"	5050.3 LB	107.8"	6797.3 LB	120.0"	7564.0 LB
	+/- 50 PSF	51.1"	3770.9 LB	58.5"	4319.9 LB	68.1"	5031.4 LB	76.0"	5613.3 LB	102.3"	7555.1 LB	120.0"	8863.5 LB
	+/- 60 PSF	44.4"	4334.0 LB	50.9"	4965.0 LB	59.3"	5782.7 LB	68.3"	6665.7 LB	91.3"	8910.0 LB	112.3"	10961.1 LB
240"	+/- 30 PSF	66.6"	2653.5 LB	72.1"	2874.9 LB	89.8"	3580.7 LB	93.3"	3720.6 LB	120.0"	4783.0 LB	120.0"	4783.0 LB
	+/- 35 PSF	61.8"	3079.3 LB	67.0"	3336.1 LB	82.9"	4132.4 LB	86.7"	4317.5 LB	116.6"	5811.0 LB	120.0"	5979.0 LB
	+/- 40 PSF	56.3"	3417.4 LB	62.7"	3803.8 LB	75.2"	4559.7 LB	81.2"	4922.8 LB	109.2"	6625.8 LB	120.0"	7279.5 LB
	+/- 45 PSF	51.6"	3732.1 LB	59.1"	4275.5 LB	68.8"	4979.7 LB	76.5"	5536.5 LB	103.0"	7451.7 LB	120.0"	8682.2 LB
	+/- 50 PSF	47.6"	4042.2 LB	54.6"	4630.6 LB	63.5"	5393.3 LB	72.6"	6158.0 LB	97.7"	8288.3 LB	120.0"	10184.6 LB
250"	+/- 30 PSF	65.5"	2740.0 LB	71.0"	2968.5 LB	88.4"	3697.4 LB	91.9"	3841.8 LB	120.0"	5018.6 LB	120.0"	5018.6 LB
	+/- 35 PSF	60.7"	3171.7 LB	65.9"	3443.7 LB	81.0"	4231.9 LB	85.3"	4456.7 LB	114.8"	5998.4 LB	120.0"	6270.5 LB
	+/- 40 PSF	55.0"	3499.1 LB	61.7"	3925.7 LB	73.4"	4668.8 LB	79.9"	5080.5 LB	107.5"	6838.0 LB	120.0"	7632.0 LB
	+/- 45 PSF	50.4"	3821.0 LB	57.7"	4377.3 LB	67.2"	5098.3 LB	75.3"	5713.0 LB	101.4"	7689.3 LB	120.0"	9100.7 LB
	+/- 50 PSF	46.5"	4138.2 LB	53.3"	4740.6 LB	62.1"	5521.4 LB	71.4"	6353.8 LB	95.6"	8507.3 LB	117.7"	10465.8 LB

***NOTE**: STEEL REINFORCEMENT LENGTH SHALL BE A MINIMUM OF 90% THE MULLION LENGTH, LOCATED AT THE CENTER OF THE MULLION AND FASTENED IN PLACE WITH #14 18-8 SS OR COATED SAE GR. 5 STAINLESS STEEL SMS OR SDS AT 12" O.C. MAX STAGGERED ALONG THE FULL REINFORCEMENT LENGTH. (REFERENCE STEEL REINFORCEMENT DETAIL 1/13)

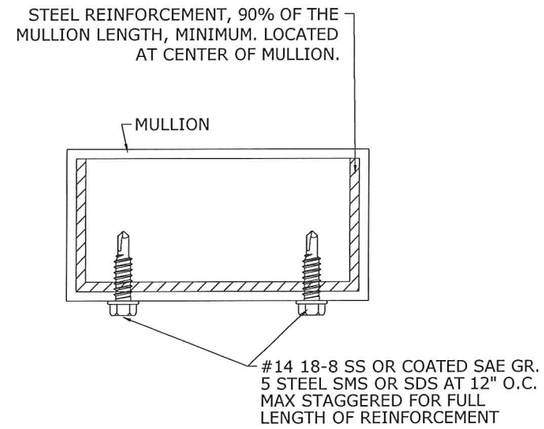

1/13 TYPICAL REINFORCEMENT
N.T.S. SECTION

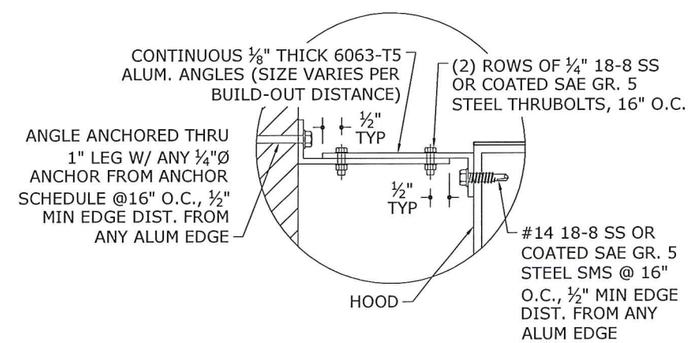

2/13 ALTERNATE BUILD-OUT HOOD CONNECTION
N.T.S. SECTION

END RETENTION MULLION SCHEDULE NOTES:

1. PRESSURES SHOWN IN "END RETENTION MULLION SCHEDULE" ARE MAXIMUM ALLOWABLE MULLION LENGTHS AT EACH RESPECTIVE SLAT SPAN AND DESIGN PRESSURE.
2. "END RETENTION MULLION SCHEDULES" ARE APPLICABLE TO ALL END RETENTION MULLIONS.
3. "INTERMEDIATE MULLIONS" ARE AS DEFINED IN ELEVATION 1/11.
4. SEE BILL OF MATERIALS FOR MULLION AND REINFORCEMENT MATERIALS.
5. ALLOWABLE DESIGN PRESSURES AND SLAT SPANS INDICATED ARE FOR DETERMINING PERMISSIBLE MULLION LENGTHS ONLY. ACTUAL SLAT SPANS AND DESIGN PRESSURES SHALL NOT EXCEED THOSE INDICATED IN SPAN SCHEDULES.
6. "END REACTIONS" ARE LISTED FOR EACH COMBINATION OF DESIGN LOAD, MULLION TYPE, & SLAT SPAN. CHOOSE MOUNTING CONNECTIONS (PER APPLICABLE CONNECTION DETAILS HEREIN) THAT PROVIDES "CONNECTION CAPACITY" GREATER THAN OR EQUAL TO "END REACTIONS" GIVEN ABOVE.
7. THIS SCHEDULE MAY BE USED FOR ALL MOUNTING CONDITIONS LISTED HEREIN.
8. ▨ DENOTES CONDITIONS NOT APPROVED FOR USE.

FRANK L. BENNARDO, P.E.
LICENSE NO. 56064
STATE OF TEXAS
02/18/2015
FRANK L. BENNARDO
LICENSED
PROFESSIONAL ENGINEER
CERT. OF REG. #F-11389
FRANK L. BENNARDO P.E. # 56064
160 SW 12th AVENUE, DEERFIELD BEACH, FL 33442
Ph: (954) 354-0660 FAX: (954) 354-0664
POWERED BY THE INNOVATORS OF ENGINEERING EXPRESS
EXPERIENCE MORE AT WWW.ENGEXP.COM

Town & Country INDUSTRIES
Wholesale Aluminum and Building Products
A Division of ABC Supply Co., Inc.
400 WEST MCNAB ROAD
FT. LAUDERDALE, FL 33309

REMARKS	DRWN	CHKD	DATE
INIT ISSUE	KL	FLB	05/30/13
REVISE RIVETS	CSL	TSB	02/09/14

THIS DOCUMENT IS THE PROPERTY OF FRANK L. BENNARDO, P.E AND SHALL NOT BE REPRODUCED OR TRANSFERRED TO OTHERS WITHOUT WRITTEN CONSENT OF FRANK L. BENNARDO, P.E. * ALTERATIONS, ADDITIONS, HIGHLIGHTING, OR OTHER MARKINGS TO THIS DOCUMENT ARE NOT PERMITTED AND INVALIDATE OUR CERTIFICATION.
COPYRIGHT FRANK L. BENNARDO P.E.

14-1765

SCALE: -

PAGE DESCRIPTION:
-
-

V:\Projects\14-1765 FL 14235 - Revise Rivet Locations for TDI 214-Resubmit Eval\WP\14-1765_a Maestroshield Roll-up.dwg
02/18/2015 - 11:11am

END RETENTION MULLION SCHEDULE: END MULLIONS

SLAT SPAN	DESIGN PRESSURE	3"x3"x0.125" W/ 2.75"x2.75"x1/8" STEEL REINF.*				3"x3"x0.25"				4"x4"x0.125" W/ 3.75"x3.75"x1/8" STEEL REINF.*				4"x4"x0.25"				4"x6"x0.25"				4"x8"x0.25"			
		MAX MULLION LENGTH	END REACTION Rv	END REACTION Rt	END REACTION Rsum	MAX MULLION LENGTH	END REACTION Rv	END REACTION Rt	END REACTION Rsum	MAX MULLION LENGTH	END REACTION Rv	END REACTION Rt	END REACTION Rsum	MAX MULLION LENGTH	END REACTION Rv	END REACTION Rt	END REACTION Rsum	MAX MULLION LENGTH	END REACTION Rv	END REACTION Rt	END REACTION Rsum	MAX MULLION LENGTH	END REACTION Rv	END REACTION Rt	END REACTION Rsum
120"	+/- 30 PSF	78.4"	1585.4 LB	430.1 LB	1642.8 LB	100.2"	2027.2 LB	550.0 LB	2100.5 LB	103.8"	2099.7 LB	569.7 LB	2175.6 LB	117.9"	2385.5 LB	647.2 LB	2471.7 LB	120.0"	2427.9 LB	658.7 LB	2515.7 LB	120.0"	2427.9 LB	658.7 LB	2515.7 LB
	+/- 35 PSF	68.4"	1728.2 LB	498.5 LB	1798.7 LB	89.1"	2249.1 LB	648.8 LB	2340.8 LB	96.4"	2433.7 LB	702.0 LB	2533.0 LB	109.5"	2765.0 LB	797.6 LB	2877.7 LB	117.3"	2961.5 LB	854.3 LB	3082.3 LB	120.0"	3029.8 LB	874.0 LB	3153.3 LB
	+/- 40 PSF	62.1"	1877.6 LB	573.4 LB	1963.2 LB	80.8"	2445.5 LB	746.9 LB	2557.0 LB	88.2"	2668.9 LB	815.1 LB	2790.6 LB	103.1"	3119.2 LB	952.6 LB	3261.4 LB	110.4"	3340.9 LB	1020.3 LB	3493.2 LB	116.9"	3536.5 LB	1080.1 LB	3697.8 LB
	+/- 45 PSF	57.1"	2011.8 LB	648.1 LB	2113.6 LB	74.4"	2622.4 LB	844.8 LB	2755.1 LB	81.3"	2864.3 LB	922.7 LB	3009.2 LB	96.9"	3414.6 LB	1100.0 LB	3587.4 LB	105.0"	3698.9 LB	1191.6 LB	3886.1 LB	111.1"	3915.5 LB	1261.3 LB	4113.7 LB
	+/- 50 PSF	53.1"	2134.0 LB	722.7 LB	2253.0 LB	69.2"	2783.8 LB	942.7 LB	2939.1 LB	75.7"	3042.9 LB	1030.5 LB	3212.6 LB	90.2"	3626.1 LB	1228.0 LB	3828.3 LB	100.4"	4039.5 LB	1368.0 LB	4264.8 LB	106.3"	4276.1 LB	1448.1 LB	4514.6 LB
	+/- 60 PSF	46.9"	2350.3 LB	871.9 LB	2506.8 LB	61.2"	3070.4 LB	1139.1 LB	3274.9 LB	67.0"	3361.0 LB	1246.9 LB	3584.9 LB	79.8"	4002.3 LB	1484.8 LB	4268.8 LB	93.3"	4678.8 LB	1735.8 LB	4990.4 LB	98.8"	4952.8 LB	1837.5 LB	5282.6 LB
	+/- 70 PSF	42.3"	2538.1 LB	1021.3 LB	2735.9 LB	55.3"	3320.3 LB	1336.0 LB	3579.0 LB	60.7"	3639.4 LB	1464.4 LB	3922.9 LB	72.2"	4330.8 LB	1742.6 LB	4668.2 LB	87.6"	5253.1 LB	2113.7 LB	5662.4 LB	93.0"	5582.6 LB	2246.3 LB	6017.6 LB
	+/- 80 PSF	38.7"	2704.6 LB	1170.5 LB	2947.0 LB	50.7"	3542.3 LB	1533.1 LB	3859.9 LB	55.7"	3887.6 LB	1682.5 LB	4236.0 LB	66.2"	4623.2 LB	2000.9 LB	5037.6 LB	80.5"	5617.9 LB	2431.4 LB	6121.5 LB	88.5"	6175.2 LB	2672.5 LB	6728.7 LB
140"	+/- 30 PSF	62.8"	1930.3 LB	505.1 LB	1995.3 LB	81.6"	2508.7 LB	656.5 LB	2593.2 LB	88.9"	2732.1 LB	714.9 LB	2824.1 LB	102.6"	3153.1 LB	825.1 LB	3259.3 LB	109.8"	3377.3 LB	883.7 LB	3491.0 LB	116.3"	3575.1 LB	935.5 LB	3695.4 LB
	+/- 35 PSF	56.8"	2104.2 LB	582.9 LB	2183.4 LB	73.9"	2736.8 LB	758.2 LB	2839.9 LB	80.5"	2982.8 LB	826.3 LB	3095.1 LB	96.1"	3559.7 LB	986.1 LB	3693.8 LB	103.2"	3824.1 LB	1059.4 LB	3968.2 LB	109.3"	4048.1 LB	1121.4 LB	4200.5 LB
	+/- 40 PSF	52.2"	2260.1 LB	660.5 LB	2354.6 LB	67.9"	2941.9 LB	859.7 LB	3064.9 LB	74.1"	3208.7 LB	937.7 LB	3342.9 LB	88.3"	3827.8 LB	1118.6 LB	3988.0 LB	98.0"	4245.0 LB	1240.5 LB	4422.5 LB	103.7"	4493.6 LB	1313.2 LB	4681.5 LB
	+/- 45 PSF	48.4"	2401.8 LB	738.1 LB	2512.7 LB	63.1"	3128.7 LB	961.5 LB	3273.1 LB	68.9"	3414.8 LB	1049.4 LB	3572.5 LB	82.1"	4072.3 LB	1251.5 LB	4260.3 LB	93.7"	4644.6 LB	1427.3 LB	4859.0 LB	99.1"	4916.6 LB	1510.9 LB	5143.5 LB
	+/- 50 PSF	45.4"	2531.9 LB	815.9 LB	2660.1 LB	59.1"	3300.5 LB	1063.5 LB	3467.6 LB	64.6"	3604.9 LB	1161.6 LB	3787.4 LB	77.0"	4297.4 LB	1384.8 LB	4515.0 LB	90.0"	5026.4 LB	1619.7 LB	5281.0 LB	95.3"	5320.8 LB	1714.5 LB	5590.2 LB
	+/- 70 PSF	36.8"	2967.7 LB	1128.9 LB	3175.1 LB	48.1"	3878.6 LB	1475.4 LB	4149.7 LB	52.7"	4247.4 LB	1615.7 LB	4544.3 LB	62.8"	5056.7 LB	1923.6 LB	5410.2 LB	76.0"	6125.3 LB	2330.1 LB	6553.5 LB	84.3"	6794.6 LB	2584.7 LB	7269.6 LB
160"	+/- 30 PSF	54.6"	2233.9 LB	567.8 LB	2304.9 LB	71.0"	2902.1 LB	737.6 LB	2994.4 LB	77.3"	3159.2 LB	803.0 LB	3259.7 LB	92.2"	3772.5 LB	958.9 LB	3892.5 LB	99.9"	4084.6 LB	1038.2 LB	4214.4 LB	105.7"	4323.8 LB	1099.0 LB	4461.2 LB
	+/- 35 PSF	49.8"	2417.8 LB	650.8 LB	2503.9 LB	64.7"	3143.5 LB	846.1 LB	3255.4 LB	70.5"	3424.6 LB	921.8 LB	3546.5 LB	84.2"	4087.9 LB	1100.3 LB	4233.3 LB	94.3"	4580.6 LB	1232.9 LB	4743.6 LB	99.8"	4848.9 LB	1305.1 LB	5021.4 LB
	+/- 40 PSF	46.0"	2583.7 LB	733.9 LB	2685.9 LB	59.8"	3361.7 LB	954.8 LB	3494.7 LB	65.2"	3665.1 LB	1041.0 LB	3810.0 LB	77.8"	4373.2 LB	1242.1 LB	4546.2 LB	89.8"	5049.3 LB	1434.2 LB	5249.1 LB	95.1"	5345.0 LB	1518.2 LB	5556.5 LB
	+/- 45 PSF	42.9"	2735.0 LB	817.2 LB	2854.5 LB	55.8"	3561.2 LB	1064.1 LB	3716.8 LB	60.9"	3885.4 LB	1161.0 LB	4055.1 LB	72.6"	4634.4 LB	1384.8 LB	4836.9 LB	86.1"	5495.4 LB	1642.1 LB	5735.5 LB	91.2"	5817.2 LB	1738.2 LB	6071.4 LB
	+/- 50 PSF	40.3"	2874.3 LB	901.0 LB	3012.2 LB	52.5"	3745.2 LB	1174.0 LB	3924.9 LB	57.3"	4089.0 LB	1281.7 LB	4285.1 LB	68.3"	4875.5 LB	1528.3 LB	5109.4 LB	82.4"	5880.2 LB	1843.2 LB	6162.3 LB	87.8"	6269.1 LB	1965.1 LB	6569.9 LB
	+/- 60 PSF	36.1"	3123.6 LB	1069.6 LB	3301.7 LB	47.1"	4075.5 LB	1395.5 LB	4307.9 LB	51.5"	4455.6 LB	1525.7 LB	4709.6 LB	61.4"	5309.1 LB	1817.9 LB	5611.7 LB	74.2"	6415.4 LB	2196.7 LB	6781.1 LB	82.4"	7122.0 LB	2438.7 LB	7528.0 LB
	+/- 70 PSF	33.0"	3342.1 LB	1239.5 LB	3564.5 LB	43.1"	4366.1 LB	1619.2 LB	4656.7 LB	47.1"	4779.3 LB	1772.5 LB	5097.3 LB	56.1"	5691.1 LB	2110.6 LB	6069.9 LB	68.0"	6889.6 LB	2555.1 LB	7348.2 LB	77.8"	7885.4 LB	2924.5 LB	8410.3 LB
180"	+/- 30 PSF	49.0"	2501.5 LB	622.2 LB	2577.7 LB	63.7"	3248.8 LB	808.1 LB	3347.8 LB	69.3"	3535.7 LB	879.5 LB	3643.4 LB	82.8"	4222.7 LB	1050.4 LB	4351.4 LB	92.8"	4733.8 LB	1177.5 LB	4878.1 LB	98.2"	5011.1 LB	1246.5 LB	5163.8 LB
	+/- 35 PSF	44.8"	2697.1 LB	711.8 LB	2789.4 LB	58.3"	3505.6 LB	925.2 LB	3625.6 LB	63.5"	3818.1 LB	1007.7 LB	3948.8 LB	75.8"	4558.2 LB	1203.0 LB	4714.2 LB	87.8"	5282.4 LB	1394.1 LB	5463.3 LB	93.0"	5591.8 LB	1475.8 LB	5783.3 LB
	+/- 40 PSF	41.5"	2873.7 LB	801.8 LB	2983.5 LB	54.0"	3738.1 LB	1043.0 LB	3880.9 LB	58.9"	4074.5 LB	1136.8 LB	4230.1 LB	70.2"	4862.3 LB	1356.6 LB	5048.0 LB	83.8"	5801.4 LB	1618.6 LB	6023.0 LB	88.7"	6141.2 LB	1713.4 LB	6375.7 LB
	+/- 45 PSF	38.8"	3035.1 LB	892.3 LB	3163.5 LB	50.5"	3951.0 LB	1161.6 LB	4118.2 LB	55.1"	4309.6 LB	1267.0 LB	4492.0 LB	65.7"	5141.0 LB	1511.4 LB	5358.6 LB	79.1"	6192.1 LB	1820.5 LB	6454.2 LB	85.2"	6664.4 LB	1959.3 LB	6946.5 LB
	+/- 50 PSF	36.5"	3183.6 LB	983.4 LB	3332.0 LB	47.5"	4147.3 LB	1281.1 LB	4340.6 LB	51.9"	4527.0 LB	1398.4 LB	4738.1 LB	61.9"	5398.4 LB	1667.5 LB	5650.1 LB	74.6"	6508.8 LB	2010.5 LB	6812.2 LB	82.1"	7165.3 LB	2213.3 LB	7499.3 LB
	+/- 60 PSF	32.8"	3449.3 LB	1167.2 LB	3641.5 LB	42.8"	4499.7 LB	1522.7 LB	4750.4 LB	46.8"	4918.4 LB	1664.4 LB	5192.4 LB	55.8"	5861.1 LB	1983.4 LB	6187.6 LB	67.4"	7080.6 LB	2396.1 LB	7475.0 LB	77.0"	8093.6 LB	2738.9 LB	8544.5 LB
200"	+/- 30 PSF	44.8"	2746.7 LB	672.9 LB	2827.9 LB	58.2"	3566.5 LB	873.8 LB	3672.0 LB	63.3"	3880.7 LB	950.8 LB	3995.5 LB	75.6"	4635.2 LB	1135.6 LB	4772.3 LB	87.3"	5350.0 LB	1310.7 LB	5508.2 LB	92.4"	5663.3 LB	1387.5 LB	5830.8 LB
	+/- 35 PSF	41.1"	2954.2 LB	770.0 LB	3052.9 LB	53.4"	3839.2 LB	1000.6 LB	3967.4 LB	58.1"	4180.7 LB	1089.6 LB	4320.4 LB	69.4"	4991.5 LB	1300.9 LB	5158.2 LB	82.7"	5952.5 LB	1551.4 LB	6151.3 LB	87.6"	6301.1 LB	1642.3 LB	6511.6 LB
	+/- 40 PSF	38.1"	3141.7 LB	867.7 LB	3259.3 LB	49.5"	4086.1 LB	1128.6 LB	4239.1 LB	54.0"	4453.1 LB	1229.9 LB	4619.9 LB	64.4"	5314.6 LB	1467.9 LB	5513.6 LB	77.5"	6393.1 LB	1765.7 LB	6632.5 LB	83.7"	6904.7 LB	1907.0 LB	7163.2 LB
	+/- 45 PSF	35.6"	3312.8 LB	966.3 LB	3450.9 LB	46.3"	4312.0 LB	1257.7 LB	4491.7 LB	50.5"	4702.9 LB	1371.7 LB	4898.9 LB	60.3"	5610.6 LB	1636.5 LB	5844.4 LB	72.6"	6756.5 LB	1970.7 LB	7038.1 LB	80.4"	7479.5 LB	2181.6 LB	7791.2 LB
	+/- 50 PSF	33.5"	3470.2 LB	1065.6 LB	3630.2 LB	43.7"	4520.3 LB	1388.1 LB	4728.6 LB	47.7"	4933.7 LB	1515.1 LB	5161.1 LB	56.9"	5883.7 LB	1806.8 LB	6154.8 LB	68.5"	7093.0 LB	2178.1 LB	7419.9 LB	77.6"	8029.6 LB	2465.7 LB	8399.6 LB
	+/- 60 PSF	30.2"	3751.3 LB	1266.6 LB	3959.3 LB	39.4"	4893.4 LB	1652.2 LB	5164.8 LB	43.1"	5348.6 LB	1805.9 LB	5645.2 LB	51.3"	6373.8 LB	2152.1 LB	6727.3 LB	62.0"	7699.6 LB	2599.7 LB	8126.7 LB	70.9"	8801.0 LB	2971.6 LB	9289.1 LB
220"	+/- 30 PSF	41.4"	2976.2 LB	722.0 LB	3062.6 LB	53.8"	3864.1 LB	937.4 LB	3976.2 LB	58.5"	4204.0 LB	1019.8 LB	4325.9 LB	69.9"	5021.6 LB	1218.2 LB	5167.2 LB	82.8"	5945.4 LB	1442.3 LB	6117.8 LB	87.6"	6293.6 LB	1526.7 LB	6476.1 LB
	+/- 35 PSF	38.0"	3195.6 LB	827.1 LB	3300.9 LB	49.4"	4152.5 LB	1074.8 LB	4289.3 LB	53.8"	4521.5 LB	1170.3 LB	4670.5 LB	64.2"	5398.6 LB	1397.4 LB	5576.5 LB	77.2"	6486.0 LB	1678.8 LB	6699.7 LB	83.2"	6989.1 LB	1809.0 LB	7219.4 LB
	+/- 40 PSF	35.3"	3393.6 LB	933.3 LB	3519.6 LB	45.9"	4413.4 LB	1213.8 LB	4577.3 LB	50.0"	4809.6 LB	1322.8 LB	4988.2 LB	59.7"	5740.2 LB	1578.7 LB	5953.3 LB	71.8"	6904.5 LB	1899.0 LB	7160.8 LB	79.5"	7647.1 LB	2103.2 LB	7931.0 LB
	+/- 45 PSF	33.0"	3574.0 LB	1040.6 LB	3722.4 LB	43.0"	4651.9 LB	1354.5 LB	4845.1 LB	46.9"	5073.5 LB	1477.2 LB	5284.1 LB	55.9"	6052.7 LB	1762.3 LB	6304.0 LB	67.3"	7288.7 LB	2122.2 LB	7591.3 LB	76.4"	8273.4 LB	2408.9 LB	8617.0 LB
	+/- 50 PSF	31.1"	3739.7 LB	1149.0 LB	3912.2 LB	40.5"	4871.4 LB	1496.6 LB	5096.1 LB	44.2"	5316.9 LB	1633.5 LB	5562.2 LB	52.7"	6340.6 LB	1948.0 LB	6633.1 LB	63.6"	7644.0 LB	2348.5 LB	7996.6 LB	72.6"	8726.5 LB	2681.1 LB	9129.1 LB
	+/- 60 PSF					36.6"	5263.5 LB	1785.2 LB	5558.0 LB	40.0"	5753.5 LB	1951.3 LB	6075.4 LB	47.7"	6856.1 LB	2325.3 LB	7239.7 LB	57.6"	8283.1 LB	2809.3 LB	8746.5 LB	65.8"	9468.4 LB	3211.3 LB	9998.2 LB
240"	+/- 30 PSF	38.7"	3194.0 LB	770.6 LB	3285.6 LB	50.2"	4146.6 LB	1000.4 LB	4265.5 LB	54.6"	4510.9 LB	1088.3 LB	4640.3 LB	65.2"	5388.4 LB	1300.0 LB	5543.0 LB	78.3"	6465.4 LB	1559.8 LB	6650.9 LB	83.6"	6909.2 LB	1666.8 LB	7107.4 LB
	+/- 35 PSF	35.5"	3424.8 LB	884.4 LB	3537.1 LB	46.1"	4450.2 LB	1149.1 LB	4596.1 LB	50.2"	4845.5 LB	1251.2 LB	5004.4 LB	60.0"	5785.5 LB	1493.9 LB	5975.3 LB	72.0"	6950.5 LB	1794.8 LB	7178.5 LB	79.4"	7662.4 LB	1978.6 LB	7913.7 LB
	+/- 40 PSF	33.0"	3632.8 LB	999.5 LB	3767.8 LB	42.9"	4724.5 LB	1300.0 LB	4900.1 LB	46.7"	5148.6 LB	1416.6 LB	5340.0 LB	55.7"	6144.8 LB	1690.7 LB	6373.1 LB	67.0"	7391.2 LB	2033.7 LB	7665.9 LB	76.0"	8374.6 LB	2304.3 LB	8685.8 LB
	+/- 45 PSF	30.9"	3821.9 LB	1116.1 LB	3981.6 LB	40.2"	4974.8 LB	1452.8 LB	5182.6 LB	43.8"	5425.9 LB	1584.5 LB	5652.5 LB	52.3"	6472.9 LB	1890.3 LB	6743.3 LB	62.9"	7795.3 LB	2276.4 LB	8120.8 LB	71.8"	8893.6 LB	2597.2 LB	9265.0 LB
	+/- 50 PSF					37.9"	5204.7 LB	1607.5 LB	5447.3 LB	41.3"	5681.2 LB	1754.7 LB	5946.0 LB	49.3"	6774.8 LB	2092.5 LB	7090.5 LB	59.5"	8168.2 LB	2522.8 LB	8549.0 LB	67.9"	9325.7 LB	2880.3 LB	9760.3 LB
250"	+/- 30 PSF	37.5"	3305.4 LB	784.2 LB	3397.2 LB	48.7"	4290.3 LB	1017.8 LB	4409.4 LB	52.9"	4666.3 LB	1107.0 LB	4795.8 LB	63.2"	5574.6 LB	1322.5 LB	5729.4 LB	75.9"	6686.8 LB	1586.4 LB	6872.4 LB	81.9"	7214.4 LB	1711.6 LB	7414.7 LB
	+/- 35 PSF	34.4"	3543.2 LB	900.0 LB	3655.7 LB	44.7"	4603.0 LB	1169.2 LB	4749.2 LB	48.7"	5010.8 LB	1272.7 LB	5169.9 LB	58.2"	5983.5 LB	1519.8 LB	6173.5 LB	69.9"	7186.2 LB	1825.3 LB	7414.4 LB	77.7"	7996.9 LB	2031.2 LB	8250.9 LB
	+/- 40 PSF	32.0"	3757.5 LB	1017.2 LB	3892.7 LB	41.6"	4885.6 LB	1322.7 LB	5061.5 LB	45.3"	5323.0 LB	1441.1 LB	5514.6 LB	54.1"	6353.6 LB	1720.1 LB	6582.3 LB	65.0"	7640.0 LB	2068.3 LB	7915.0 LB	74.1"	8708.5 LB	2357.6 LB	9022.0 LB
	+/- 45 PSF					39.0"	5143.3 LB	1478.3 LB	5351.5 LB	42.5"	5608.4 LB	1612.0 LB	5835.5 LB	50.7"	6691.5 LB	1923.3 LB	6962.4 LB	61.1"	8055.8 LB	2315.4 LB	8382.0 LB	69.7"	9189.1 LB	2641.1 LB	9561.1 LB
	+/- 50 PSF					36.8"	5380.0 LB	1636.0 LB	5623.2 LB	40.1"	5871.2 LB	1785.4 LB	6136.6 LB	47.9"	7002.1 LB	2129.3 LB	7318.7 LB	57.7"	8439.6 LB	2566.4 LB	8821.2 LB	65.9"	9633.6 LB	2929.5 LB	10069.1 LB

***NOTE**: STEEL REINFORCEMENT LENGTH SHALL BE A MINIMUM OF 90% THE MULLION LENGTH, LOCATED AT THE CENTER OF THE MULLION AND FASTENED IN PLACE WITH #14 316 STAINLESS STEEL SMS OR SDS AT 12" O.C. MAX STAGGERED ALONG THE FULL REINFORCEMENT LENGTH. (REFERENCE STEEL REINFORCEMENT DETAIL 1/13)

END RETENTION MULLION SCHEDULE NOTES:

1. PRESSURES SHOWN IN "END RETENTION MULLION SCHEDULE" ARE MAXIMUM ALLOWABLE MULLION LENGTHS AT EACH RESPECTIVE SLAT SPAN AND DESIGN PRESSURE.
2. "END RETENTION MULLION SCHEDULES" ARE APPLICABLE TO ALL END RETENTION MULLIONS.
3. "END MULLIONS" ARE AS DEFINED IN ELEVATION 1/11.
4. SEE BILL OF MATERIALS FOR MULLION AND REINFORCEMENT MATERIALS.
5. ALLOWABLE DESIGN PRESSURES AND SLAT SPANS INDICATED ARE FOR DETERMINING PERMISSIBLE MULLION LENGTHS ONLY. ACTUAL SLAT SPANS AND DESIGN PRESSURES SHALL NOT EXCEED THOSE INDICATED IN SPAN SCHEDULES.
6. "END REACTIONS" ARE LISTED FOR EACH COMBINATION OF DESIGN LOAD, MULLION TYPE, & SLAT SPAN. CHOOSE MOUNTING CONNECTIONS (PER APPLICABLE CONNECTION DETAILS HEREIN) THAT PROVIDES "CONNECTION CAPACITY" GREATER THAN OR EQUAL TO "END REACTIONS" GIVEN ABOVE.
7. THIS SCHEDULE MAY BE USED FOR ALL MOUNTING CONDITIONS LISTED HEREIN.
8. DENOTES CONDITIONS NOT APPROVED FOR USE.

FRANK L. BENNARDO, P.E.
STATE OF TEXAS
02/18/2015
CERT OF REG. #F-11383
FRANK L. BENNARDO P.E.
160 SW 12th AVENUE
DEERFIELD BEACH, FL 33442
Ph: (954) 354-0660 FAX: (954) 354-0664
POWERED BY THE INNOVATIVE ENGINEERS
ENGINEERING EXPRESS
EXPERIENCE MORE AT WWW.ENGEXP.COM

Town & Country INDUSTRIES
Wholesale Aluminum and Building Products
A Division of ABC Supply Co., Inc.
400 WEST MCNAB ROAD
FT. LAUDERDALE, FL 33309

REMARKS	DRWN	CHKD	DATE
INIT ISSUE	KL	FLB	05/30/13
REVISE RIVETS	CSL	TSB	02/09/14
-	-	-	-
-	-	-	-
-	-	-	-

THIS DOCUMENT IS THE PROPERTY OF FRANK L. BENNARDO, P.E AND SHALL NOT BE REPRODUCED IN WHOLE OR PART WITHOUT WRITTEN CONSENT OF FRANK L. BENNARDO, P.E. ANY REPRODUCTION IN WHOLE OR IN PART MUST INCLUDE THIS NOTICE AND THE ENGINEER'S SEAL AND CERTIFICATION. ANY ALTERATIONS TO THIS DOCUMENT ARE NOT PERMITTED AND INVALIDATE OUR CERTIFICATION.

COPYRIGHT FRANK L. BENNARDO P.E.

14-1765

SCALE: -

PAGE DESCRIPTION:
-
-

V:\Projects\14-1765 FL 14235 - Revise Rivet Locations for TDI 214-Resubmit Eval\WP\14-1765_a Maestroshield Roll-up.dwg
02/18/2015 - 11:11am

STORM BAR, NON-END RETENTION MULLION, AND INTERMEDIATE END RETENTION MULLION CONNECTION DETAILS

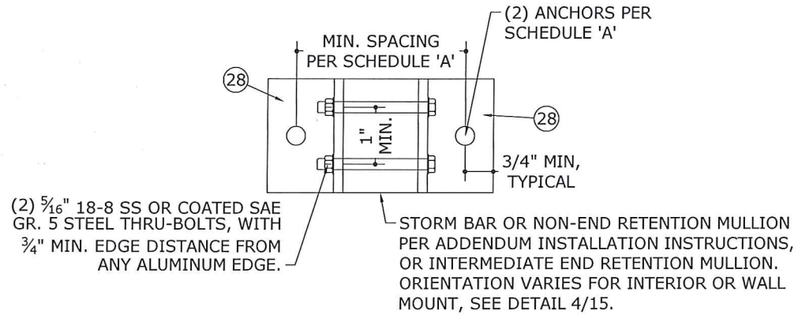

1/15 INTERIOR OR WALL MOUNT

N.T.S.

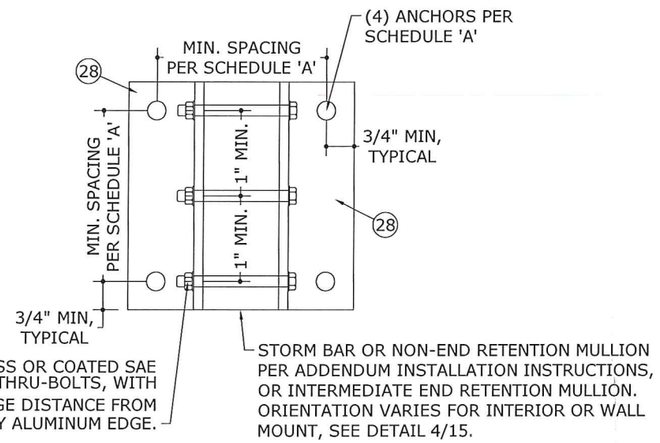

2/15 INTERIOR OR WALL MOUNT

N.T.S.

- CLUSTER OF (4) 3/8" POWERS WEDGE BOLTS AT CENTERED EACH STORM BAR W/ 3½" MIN. EMBED, 3" MIN. EDGE DISTANCE, AND 4½" SPACING TO 3KSI MIN. CONCRETE. BALANCE SPACED AT 18" O.C. MAX
- CLUSTER OF (4) 5/16" ITW TAPCONS AT CENTERED EACH STORM BAR W/ 2-1/4" MIN. EMBED, 4" MIN. EDGE DISTANCE, AND 4" SPACING TO GROUT-FILLED CONCRETE BLOCK. BALANCE SPACED AT 18" O.C. MAX
- CLUSTER OF (4) 5/16" LAG SCREWS AT CENTERED EACH STORM BAR W/ 2" MIN. THREAD PENETRATION, 1-1/4" MIN. EDGE DISTANCE, AND 2" SPACING TO G=0.42 MIN. WOOD. BALANCE SPACED AT 18" O.C. MAX

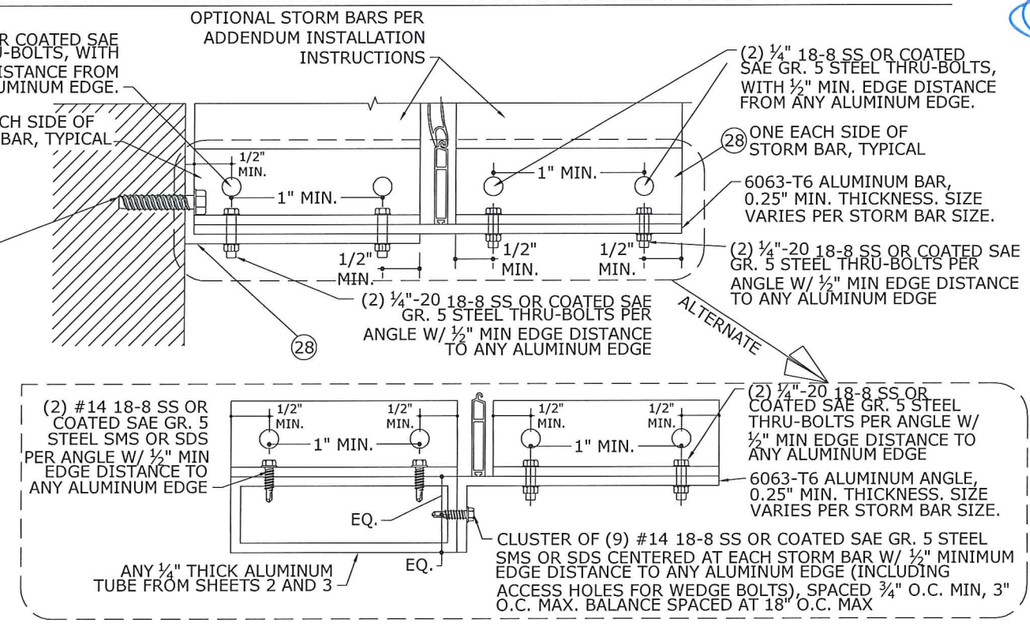

CONNECTION CAPACITY: 2276 LB

3/15 STORM BAR BUILD-OUT MOUNT

N.T.S.

VERT SECTION

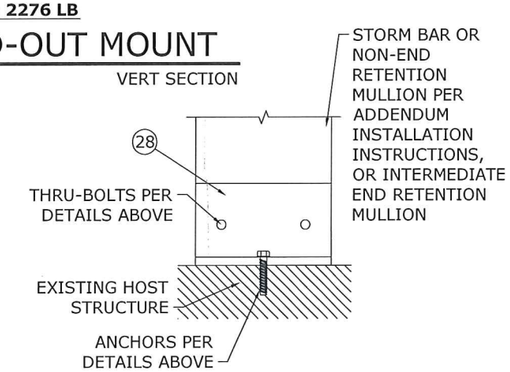

INTERIOR MOUNT

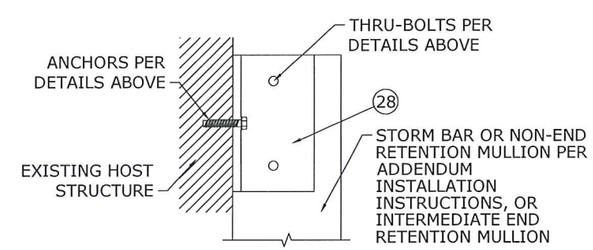

WALL MOUNT

4/15 MOUNTING CONDITIONS

N.T.S.

ANCHOR NOTES:

1. ANCHORS SHALL BE INSTALLED IN ACCORDANCE WITH MANUFACTURERS' RECOMMENDATIONS.
2. MINIMUM EMBEDMENT SHALL BE AS NOTED IN ANCHOR SCHEDULE. MINIMUM EMBEDMENT AND EDGE DISTANCE EXCLUDES STUCCO, FOAM, BRICK, AND OTHER WALL FINISHES.
3. ANCHOR SCHEDULE APPLIES TO ALL PRODUCTS CERTIFIED HEREIN.
4. WHERE EXISTING STRUCTURE IS WOOD FRAMING, EXISTING CONDITIONS MAY VARY. FIELD VERIFY THAT FASTENERS ARE INTO ADEQUATE WOOD FRAMING MEMBERS, NOT INTO PLYWOOD.
5. MACHINE SCREWS SHALL HAVE MINIMUM OF 5/8" ENGAGEMENT OF THREADS IN BASE ANCHOR AND MAY HAVE EITHER A PAN HEAD, TRUSS HEAD, OR WAFER HEAD ("SIDEWALK BOLT") U.N.O.
6. * ANCHOR SHALL PENETRATE THROUGH FACE SHELL INTO GROUTED CELL.

SCHEDULE 'A'

ANCHOR TYPE	MINIMUM SPACING	MINIMUM EDGE DISTANCE	CONNECTION DETAIL	MOUNTING CONDITION	CONNECTION CAPACITY
3/8" POWERS WEDGE BOLTS W/ 3-1/2" EMBED TO 3KSI MIN. CONCRETE	4.5"	4.5"	1/13	WALL MOUNT	4332 LB
				INTERIOR MOUNT	3065 LB
			2/13	WALL MOUNT	8820 LB
				INTERIOR MOUNT	6130 LB
3/8" POWERS STEEL DROPIN W/ 1-9/16" EMBED TO 3KSI MIN. CONCRETE	4.5"	5.25"	1/13	WALL MOUNT	1590 LB
				INTERIOR MOUNT	2290 LB
			2/13	WALL MOUNT	3180 LB
				INTERIOR MOUNT	4580 LB
3/8" POWERS WEDGE BOLTS W/ 3-1/2" EMBED TO GROUT-FILLED CONCRETE BLOCK*	6.0"	12.0"	1/13	WALL MOUNT	2580 LB
				INTERIOR MOUNT	2200 LB
			2/13	WALL MOUNT	5160 LB
				INTERIOR MOUNT	4400 LB
5/16" ITW TAPCON XL OR ELCO ULTRACON W/ 2-1/4" MIN. EMBED TO 3.5KSI MIN. CONCRETE	5.0"	3.125"	1/13	WALL MOUNT	1576 LB
				INTERIOR MOUNT	1702 LB
			2/13	WALL MOUNT	3152 LB
				INTERIOR MOUNT	3404 LB
5/16" ITW TAPCON XL OR ELCO ULTRACON W/ 2-1/4" MIN. EMBED TO GROUT-FILLED CONCRETE BLOCK	5.0"	3.125"	1/13	WALL MOUNT	584 LB
				INTERIOR MOUNT	744 LB
			2/13	WALL MOUNT	1168 LB
				INTERIOR MOUNT	1488 LB
5/16" LAG SCREW W/ 2" MIN. THREAD PENETRATION TO G=0.42 MIN WOOD	2.0"	1.25"	1/13	WALL MOUNT	1310 LB
				INTERIOR MOUNT	302 LB
			2/13	WALL MOUNT	2620 LB
				INTERIOR MOUNT	604 LB

FRANK L. BENNARDO, P.E.
PE56064
STATE OF TEXAS
02/18/2015
FRANK L. BENNARDO
CERT. OF REG. NO. 96064
LICENSED PROFESSIONAL ENGINEER
FRANK L. BENNARDO P.E.
160 SW 12th AVENUE
DEERFIELD BEACH, FL 33442
Ph: (954) 354-0660 FAX: (954) 354-0443
POWERED BY THE INNOVATORS
ENGINEERING EXPRESS
EXPERIENCE MORE AT WWW.ENGEXPRESS.COM

TownCountry INDUSTRIES
Wholesale Aluminum and Building Products
A Division of ABC Supply Co., Inc.
400 WEST MCNAB ROAD
FT. LAUDERDALE, FL 33309

REMARKS	DRWN	CHKD	DATE
INIT ISSUE	KL	FLB	05/30/13
REVISE RIVETS	CSL	TSB	02/09/14

THIS DOCUMENT IS THE PROPERTY OF FRANK L. BENNARDO, P.E AND SHALL NOT BE REPRODUCED IN WHOLE OR IN PART WITHOUT WRITTEN CONSENT OF FRANK L. BENNARDO, P.E. * ALTERATIONS, ADDITIONS, HIGHLIGHTING, OR OTHER MARKINGS TO THIS DOCUMENT ARE NOT PERMITTED AND INVALIDATE OUR CERTIFICATION.
COPYRIGHT FRANK L. BENNARDO P.E.

14-1765

SCALE: -

PAGE DESCRIPTION:
-
-

V:\Projects\14-1765 FL 14235 - Revise Rivet Locations for TDI 214-Resubmit Eval\WP\14-1765_a Maestroshield Roll-up.dwg
02/18/2015 - 11:11am

END RETENTION END MULLION CONNECTION DETAILS

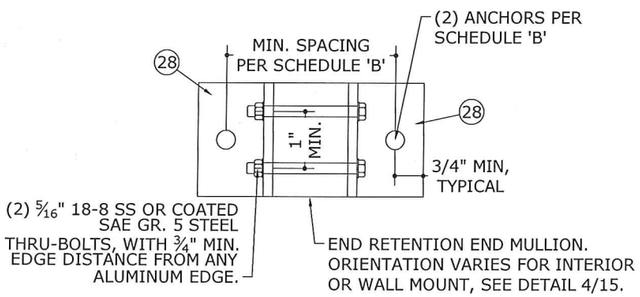

1/16 INTERIOR OR WALL MOUNT
N.T.S.

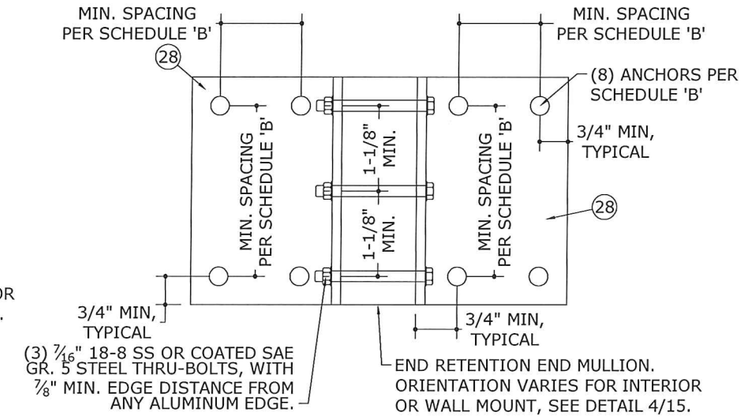

3/16 INTERIOR OR WALL MOUNT
N.T.S.

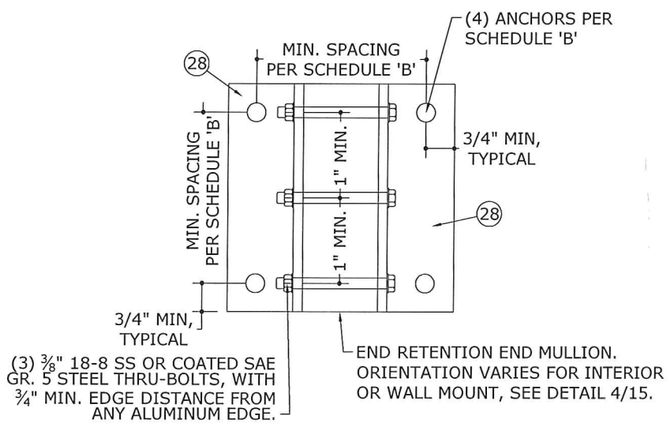

2/16 INTERIOR OR WALL MOUNT
N.T.S.

SCHEDULE 'B'

ANCHOR TYPE	MINIMUM SPACING	MINIMUM EDGE DISTANCE	CONNECTION DETAIL	CONNECTION CAPACITY	
3/8" POWERS WEDGE BOLTS W/ 3-1/2" EMBED TO 3KSI MIN. CONCRETE	4.5"	4.5"	1/16	Tcap	4332 LB
				Vcap	3065 LB
			2/16	Tcap	8820 LB
				Vcap	6130 LB
	2.5"	4.5"	3/16	Tcap	11819 LB
				Vcap	10176 LB
3/8" POWERS STEEL DROPIN W/ 1-9/16" EMBED TO 3KSI MIN. CONCRETE	4.5"	5.25"	1/16	Tcap	1590 LB
				Vcap	2290 LB
			2/16	Tcap	3180 LB
				Vcap	4580 LB
	2.5"	5.25"	3/16	Tcap	3689 LB
				Vcap	5313 LB
3/8" POWERS WEDGE BOLTS W/ 3-1/2" EMBED TO GROUT-FILLED CONCRETE BLOCK*	6.0"	12.0"	1/16	Tcap	2580 LB
				Vcap	2200 LB
			2/16	Tcap	5160 LB
				Vcap	4400 LB
5/16" ITW TAPCON XL OR ELCO ULTRACON W/ 2-1/4" MIN. EMBED TO 3.5KSI MIN. CONCRETE	5.0"	3.125"	1/16	Tcap	1576 LB
				Vcap	1702 LB
			2/16	Tcap	3152 LB
				Vcap	3404 LB
5/16" ITW TAPCON XL OR ELCO ULTRACON W/ 2-1/4" MIN. EMBED TO GROUT-FILLED CONCRETE BLOCK	5.0"	3.125"	1/16	Tcap	584 LB
				Vcap	744 LB
			2/16	Tcap	1168 LB
				Vcap	1488 LB
5/16" LAG SCREW W/ 2" MIN. THREAD PENETRATION TO G=0.42 MIN WOOD	2.0"	1.25"	1/16	Tcap	1310 LB
				Vcap	302 LB
			2/16	Tcap	2620 LB
				Vcap	604 LB

SCHEDULE 'B' NOTES:

1. FOR INTERIOR MOUNT CONDITIONS WITH END RETENTION END MULLIONS, 'Rsum' VALUES IN MULLION SCHEDULE SHALL NOT EXCEED MAX 'Vcap' VALUES NOTED IN SCHEDULE 'B'.
2. FOR WALL MOUNT CONDITIONS WITH END RETENTION END MULLIONS, **Rv/Vcap + Rt/Tcap SHALL BE LESS THAN OR EQUAL TO 1.0**, WHERE 'Rv' AND 'Rt' ARE PER MULLION SCHEDULES, AND 'Tcap' AND 'Vcap' ARE PER SCHEDULE 'B'.
3. * ANCHOR SHALL PENETRATE THROUGH FACE SHELL INTO GROUTED CELL.

STORM BAR TO HEADER CONNECTION DETAILS

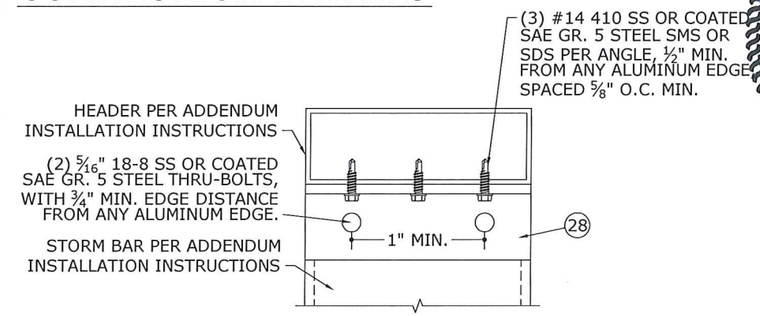

CONNECTION CAPACITY: 4262 LB

4/16 STORM BAR TO HEADER
N.T.S. VERT SECTION

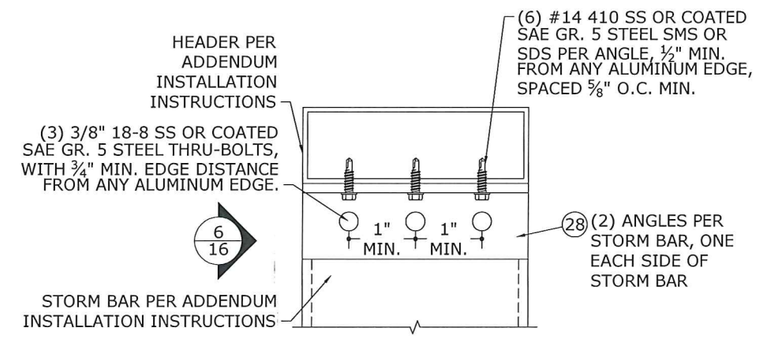

CONNECTION CAPACITY: 8524 LB

5/16 STORM BAR TO HEADER
N.T.S. VERT SECTION

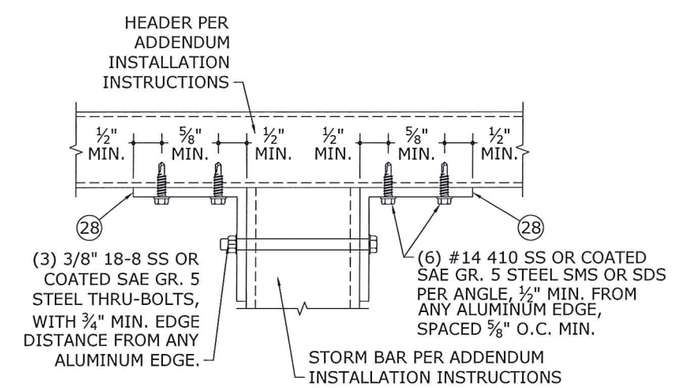

CONNECTION CAPACITY: 8524 LB

6/16 STORM BAR TO HEADER
N.T.S. VERT SECTION

FRANK L. BENNARDO, P.E.
LICENSED PROFESSIONAL ENGINEER
STATE OF TEXAS
02/18/2015
FRANK L. BENNARDO
CERT. OF REG. NO. 96064
FRANK L. BENNARDO
160 SW 12th AVENUE, SUITE 206
DEERFIELD BEACH, FL 33442
Ph: (954) 354-0660 FAX: (954) 354-0662
POWERED BY THE INNOVATORS
ENGINEERING EXPRESS
EXPERIENCE MORE AT WWW.ENGINEERINGEXPRESS.NET

Town & Country INDUSTRIES
Wholesale Aluminum and Building Products
A Division of ABC Supply Co., Inc.
400 WEST MCNAB ROAD
FT. LAUDERDALE, FL 33309

REMARKS	DRWN	CHKD	DATE
INIT ISSUE	KL	FLB	05/30/13
REVISE RIVETS	CSL	TSB	02/09/14

THIS DOCUMENT IS THE PROPERTY OF FRANK L. BENNARDO, P.E AND SHALL NOT BE REPRODUCED IN WHOLE OR IN PART WITHOUT WRITTEN CONSENT OF FRANK L. BENNARDO, P.E. * ALTERATIONS, ADDITIONS, HIGHLIGHTING, OR OTHER MARKINGS TO THIS DOCUMENT ARE NOT PERMITTED AND INVALIDATE OUR CERTIFICATION.
COPYRIGHT FRANK L. BENNARDO P.E.

14-1765

SCALE: -

PAGE DESCRIPTION:
-
-

V:\Projects\14-1765 FL 14235 - Revise Rivet Locations for TDI 214-Resubmit Eval\WP\14-1765_a Maestroshield Roll-up.dwg
02/18/2015 - 11:12am

HEADER CONNECTION DETAILS

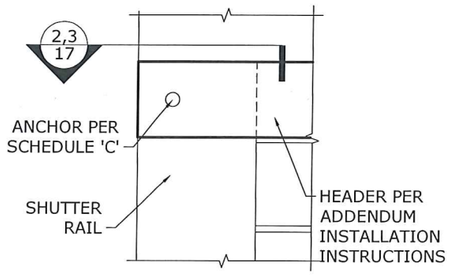

1 / 17 BUILD-OUT & WALL MOUNT
N.T.S. ELEV

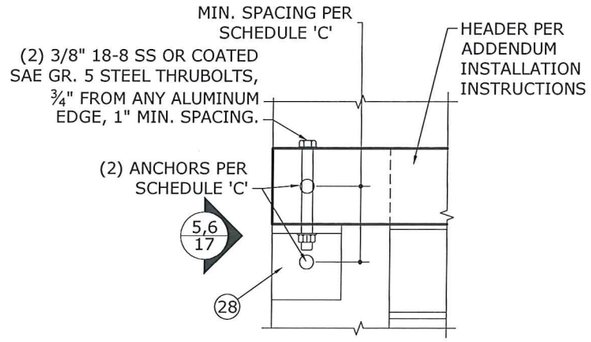

4 / 17 BUILD-OUT & WALL MOUNT
N.T.S. ELEV

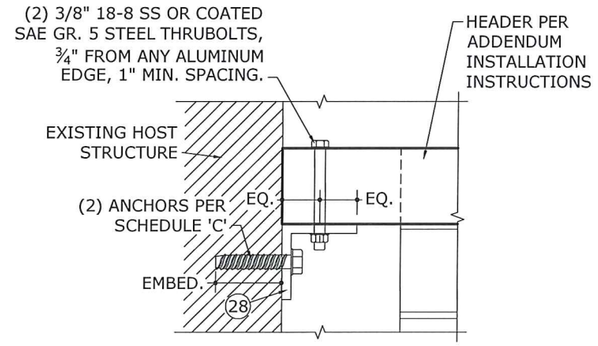

7 / 17 INTERIOR MOUNT
N.T.S. ELEV

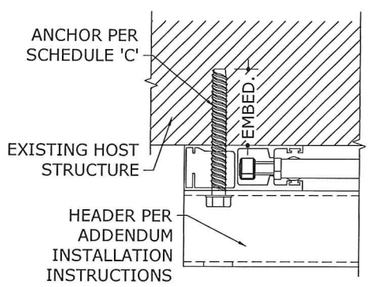

2 / 17 WALL MOUNT
N.T.S. HORIZ SECTION

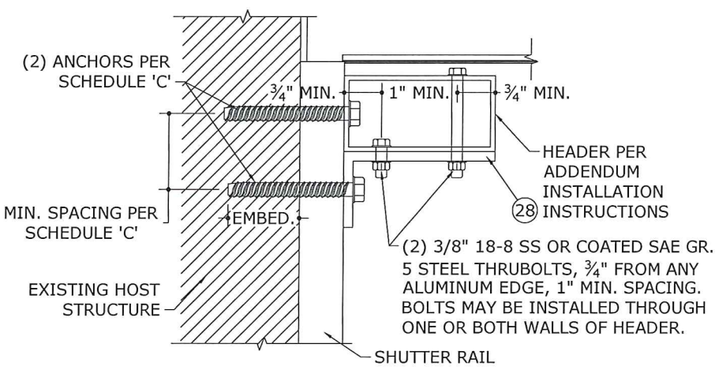

5 / 17 WALL MOUNT
N.T.S. VERT SECTION

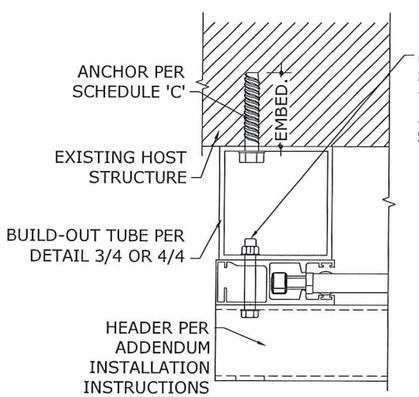

3 / 17 BUILD-OUT MOUNT
N.T.S. HORIZ SECTION

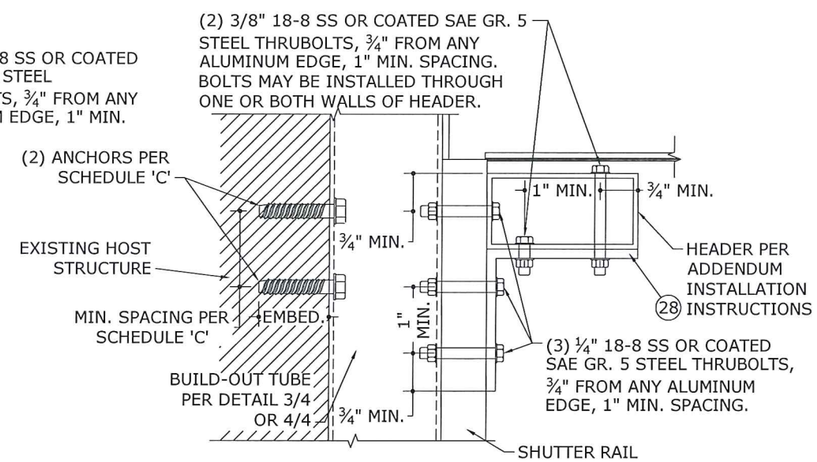

6 / 17 BUILD-OUT MOUNT
N.T.S. VERT SECTION

SCHEDULE 'C'

ANCHOR TYPE	MINIMUM SPACING	MINIMUM EDGE DISTANCE	MOUNTING CONDITION	NUMBER OF ANCHORS	CONNECTION CAPACITY
3/8" POWERS WEDGE BOLTS W/ 3-1/2" EMBED TO 3KSI MIN. CONCRETE	4.5"	4.5"	BUILD-OUT OR WALL MOUNT	1	2205 LB
				2	3093 LB
			INTERIOR MOUNT	1	1533 LB
				2	3065 LB
	2.5"	4.5"	BUILD-OUT OR WALL MOUNT	1	1477 LB
				2	2955 LB
			INTERIOR MOUNT	1	1272 LB
				2	2544 LB
3/8" POWERS WEDGE BOLTS W/ 3-1/2" EMBED TO GROUT-FILLED CONCRETE BLOCK*	6.0"	12.0"	BUILD-OUT OR WALL MOUNT	1	1290 LB
				2	2580 LB
			INTERIOR MOUNT	1	1100 LB
				2	2200 LB
3/8" POWERS STEEL DROPIN W/ 1-9/16" EMBED TO 3KSI MIN. CONCRETE	4.5"	5.25"	BUILD-OUT OR WALL MOUNT	1	795 LB
				2	1590 LB
			INTERIOR MOUNT	1	1145 LB
				2	2290 LB
	2.5"	5.25"	BUILD-OUT OR WALL MOUNT	1	461 LB
				2	922 LB
			INTERIOR MOUNT	1	664 LB
				2	1328 LB
5/16" ITW TAPCON XL OR ELCO ULTRACON W/ 2-1/4" MIN. EMBED TO 3.5KSI MIN. CONCRETE	5.0"	4.0"	BUILD-OUT OR WALL MOUNT	1	788 LB
				2	1576 LB
			INTERIOR MOUNT	1	851 LB
				2	1702 LB
5/16" ITW TAPCON XL OR ELCO ULTRACON W/ 2-1/4" MIN. EMBED TO GROUT-FILLED CONCRETE BLOCK	5.0"	3.125"	BUILD-OUT OR WALL MOUNT	1	292 LB
				2	584 LB
			INTERIOR MOUNT	1	372 LB
				2	744 LB
5/16" LAG SCREW W/ 2" MIN. THREAD PENETRATION TO G=0.42 MIN WOOD	2.0"	1.25"	BUILD-OUT OR WALL MOUNT	1	655 LB
				2	1311 LB
			INTERIOR MOUNT	1	151 LB
				2	301 LB

NOTES:

1. ALL ANCHORS SHALL BE ¾" MINIMUM FROM ANY ALUMINUM EDGE.
2. * ANCHOR SHALL PENETRATE THROUGH FACE SHELL INTO GROUTED CELL

FRANK L. BENNARDO, P.E.
#36606
STATE OF TEXAS
02/18/2015
CERT OF AUTH #F-11393
FRANK L. BENNARDO
LICENSED
36064
PROFESSIONAL ENGINEER
FRANK L. BENNARDO, P.E.
160 SW 12th AVENUE
DEERFIELD BEACH, FL 33441
Ph: (954) 354-0660 FAX: (954) 354-0664
POWERED BY THE INNOVATIVE ENGINEERS
ENGINEERS EXPRESS
EXPERIENCE MORE AT WWW.ENGINEERSEXPRESS.COM

Town & Country INDUSTRIES
Wholesale Aluminum and Building Products
A Division of ABC Supply Co., Inc.
400 WEST MCNAB ROAD
FT. LAUDERDALE, FL 33309

REMARKS	DRWN	CHKD	DATE
INIT ISSUE	KL	FLB	05/30/13
REVISE RIVETS	CSL	TSB	02/09/14

THIS DOCUMENT IS THE PROPERTY OF FRANK L. BENNARDO, P.E AND SHALL NOT BE REPRODUCED IN WHOLE OR IN PART WITHOUT PERMISSION OF FRANK L. BENNARDO, P.E. * ALTERATIONS, ADDITIONS, HIGHLIGHTING, OR OTHER MARKINGS TO THIS DOCUMENT ARE NOT PERMITTED AND INVALIDATE OUR CERTIFICATION.
COPYRIGHT FRANK L. BENNARDO P.E.

14-1765

SCALE: -

PAGE DESCRIPTION:
-
-

V:\Projects\14-1765 FL 14235 - Revise Rivet Locations for TDI 214-Resubmit Eval\WP\14-1765_a Maestroshield Roll-up.dwg
02/18/2015 - 11:12am