GENERAL NOTES:

1. GPP FABRIC SHUTTER – SERIES 2000 SHOWN ON THIS PRODUCT EVALUATION DOCUMENT (P.E.D.) HAS BEEN VERIFIED FOR COMPLIANCE IN ACCORDANCE WITH THE 2006 EDITIONS OF THE INTERNATIONAL BUILDING CODE, (I.B.C.) AND INTERNATIONAL RESIDENTIAL CODE, (I.R.C.) WITH THE 2006 TEXAS REVISIONS, EFFECTIVE JANUARY 1, 2008.
   THIS PRODUCT'S MAY BE INSTALLED AT SEAWARD AND INLAND AREAS, AS DEFINED BY THE TEXAS DEPARTMENT OF INSURANCE. DESIGN WIND LOADS SHALL BE DETERMINED AS PER SECTION 1609 OF THE OF THE INTERNATIONAL BUILDING CODE, FOR A BASIC WIND SPEED AS REQUIRED BY THE JURISDICTION WHERE SHUTTER WILL BE INSTALLED, AND FOR A DIRECTIONALITY FACTOR Kd=0.85, IN ACCORDANCE W/ ASCE 7–05 STANDARD. IN ORDER TO VERIFY THAT COMPONENTS AND ANCHORS ON THIS P.E.D. AS TESTED WERE NOT OVER STRESSED, A 33% INCREASE IN ALLOWABLE STRESS FOR WIND LOADS WAS NOT USED IN THEIR ANALYSIS. FASTENERS SPACING TO WOOD HAS BEEN DETERMINED IN ACCORDANCE WITH N.D.S. 2005.

   MAXIMUM DESIGN PRESSURE RATING, MAXIMUM PANEL SPAN & MINIMUM SEPARATION TO GLASS SHALL BE AS INDICATED ON SCHEDULES #1 & #2 ON SHEET 13.

   PRODUCT'S ADEQUACY FOR IMPACT AND WIND RESISTANCE HAS BEEN VERIFIED IN ACCORDANCE WITH SECTION 1609.1.2 AND R301.1.3 OF THE INTERNATIONAL AND RESIDENTIAL BUILDING CODE, RESPECTIVELY, AS PER AMERICAN TESTING LAB OF SOUTH FLORIDA. REPORT # **0904.01–09**, AS PER ASTM E 1886–05, E 1996–05 AND E 330–02 STANDARDS, QUALIFYING INSTALLATIONS FOR WIND ZONES 1, 2, 3 & 4, MISSILE TYPE D, APPLICABLE TO BASIC PROTECTION ONLY, FOR INSTALLATIONS AT NON ESSENTIAL FACILITIES AS DEFINED BY SECTIONS 6.2.1.1, 6.2.1.2 AND 8.3 OF ASTM E 1996–05.

2. ALL COMPONENTS TO BE AS PER DETAILS AND BILL OF MATERIALS ON SHEETS 2 & 3.

3. FABRIC MADE FROM HIGH DENSITY POLYETHYLENE TAPES, COATED ON (2) SIDES WITH LOW DENSITY POLYETHYLENE AND LAMINATED TOGETHER WITH (3) LOW DENSITY POLYETHYLENE, MODEL X719N1N1, MANUFACTURED BY FABRENE INC., 240 DUPONT RD. P.O. BOX 4040 NORTH BAY, ON, CANADA P1B 8Z4. SHALL HAVE THE FOLLOWING PROPERTIES:

PROPERTIES	RESULT	TEST METHOD
(1) UNIT WEIGHT:	30.4 oz/yd²	ASTM D3776
(2) WARP CONSTRUCTION:	16 TAPES/in WARP 27.9 TAPES/in WEFT	ASTM D3775
(3) TENSILE MAXIMUM STRENGTH:	14.8 psi (VERTICAL) 11.4 psi (HORIZONTAL)	ASTM D751
(4) COATING:	0.9 mil NATURAL	ASTM D1777 MOD
(5) SELF IGNITION TEMPERATURE: FLASH IGNITION TEMPERATURE:	380°C 390°C	ASTM D1929
(6) RATE OF BURN:	25mm/min, CLASS CC2	ASTM D635
(7) AVERAGE SMOKE DENSITY RATING:	2.2	ASTM D2843

4. ALL SCREWS & BOLTS INSTALLED AT SEAWARD AREAS TO BE STAINLESS STEEL 304 OR 316 AISI SERIES AND MEET ASTM A167, OR HOT DIPPED GALVANIZED (AFTER FABRICATION) CARBON STEEL AS PER ASTM A123 OR ASTM A153, OR HOT DIPPED GALVANIZED OR GALVANNEALED (PRIOR TO FABRICATION) AND MEET ASTM A653 WITH 50 KSI YIELD STRENGTH AND 90 KSI TENSILE STRENGTH, PER 2006 TEXAS REVISIONS TO SECTION 1716.1.1 OF THE 2006 I.B.C. AND SECTION R325.1.1 OF THE 2006 I.R.C.

5. ALL SCREWS & BOLTS INSTALLED AT INLAND I AREAS TO BE STAINLESS STEEL 304 OR 316 AISI SERIES AND MEET ASTM A167, OR HOT DIPPED GALVANIZED (AFTER FABRICATION) CARBON STEEL AS PER ASTM A123 OR ASTM A153, OR HOT DIPPED GALVANIZED OR GALVANNEALED (PRIOR TO FABRICATION) AND MEET ASTM A653; HOT DIP GALVANIZED OR ELECTRO GALVANIZED PER ASTM A641, MECHANICALLY DEPOSITED ZINC COATINGS PER ASTM B695 OR ELECTRO DEPOSITED ZINC COATINGS PER ASTM B633, PER THE 2006 TEXAS REVISIONS TO SECTION 1716.1.2 OF THE 2006 I.B.C. AND TO SECTION R325.1.2 OF THE 2006 I.R.C.

6. MAXIMUM ANCHORS SPACING & ANCHOR SPECS SHALL BE AS PER SCHEDULES #3 & #3A ON SHEETS 2, 14 & 15.

7. PRODUCT MAY ALSO BE INSTALLED HORIZONTALLY FOLLOWING INSTALLATION DETAILS SHOWN ON SECTIONS A, B, C, D, E, F & F' ON SHEETS 5 THRU 8.

8. THIS PRODUCT SHALL BE ONLY INSTALLED WHEN A HURRICANE WARNING IS ISSUED AND SHALL BE IMMEDIATELY REMOVED AFTER THOSE CONDITIONS ARE OVER. FABRIC SHALL BE STORED IN A PLACE NOT EXPOSED TO THE WEATHER AND SHALL BE PROPERLY MAINTAINED, PER MANUFACTURER'S RECOMMENDATIONS.

9. IT SHALL BE THE RESPONSIBILITY OF THE CONTRACTOR TO VERIFY THE SOUNDNESS OF THE STRUCTURE WHERE PRODUCT IS TO BE ATTACHED TO INSURE PROPER ANCHORAGE. THIS PRODUCT SHALL ONLY BE ATTACHED TO POURED CONCRETE, GROUT FILLED BLOCK, HOLLOW BLOCK, WOOD AND STEEL FRAME BUILDINGS WITH LIMITATIONS INDICATED ON THIS DRAWING.

10. THE INSTALLATION CONTRACTOR IS TO SEAL/CAULK ALL PRODUCT COMPONENT EDGES WHICH REMAIN IN CONTINUOUS CONTACT WITH THE BUILDING TO PREVENT WIND/RAIN INTRUSION. INSTALLATION AND DRIVING OF FASTENERS AND SLEEVES (AS APPLICABLE) INTO EXISTING STRUCTURE'S FINISH SHALL BE CAREFULLY PERFORMED IN SUCH A WAY THAT FINISH AROUND FASTENERS IS NOT DAMAGED. SIDEWALK BOLTS (SCREWS OR RODS) SHALL BE LEFT AT ALL CORRESPONDING ANCHOR'S LOCATION.

11. PRODUCT'S INSTALLATION SHALL COMPLY WITH SPECS INDICATED IN THIS DRAWING PLUS ANY BUILDING AND ZONING REGULATIONS PROVIDED BY THE JURISDICTION WHERE PERMIT IS APPLIED TO.

12. (a) THIS PRODUCT EVALUATION DOCUMENT (P.E.D.) PREPARED BY THIS ENGINEER GENERIC AN DOES NOT PROVIDE INFORMATION FOR A SITE SPECIFIC PROJECT; i.e. WHERE THE SITE CONDITIONS DEVIATE FROM THE P.E.D.

    (b) CONTRACTOR TO BE RESPONSIBLE FOR THE SELECTION, PURCHASE AND INSTALLATION INCLUDING LIFE SAFETY OF THIS PRODUCT BASED ON THIS P.E.D. PROVIDED HE/SHE DOES NOT DEVIATE FROM THE CONDITIONS DETAILED ON THIS DOCUMENT. CONSTRUCTION SAFETY AT SITE IS THE CONTRACTOR'S RESPONSIBILITY.

    (c) THIS P.E.D. WILL BE CONSIDERED INVALID IF ALTERED BY ANY MEANS.

    (d) SITE SPECIFIC PROJECTS SHALL BE PREPARED BY A PROFESSIONAL REGISTERED ENGINEER OR ARCHITECT WHICH WILL BECOME THE ENGINEER OF RECORD (E.O.R.) FOR THE PROJECT AND WHO WILL BE RESPONSIBLE FOR THE PROPER USE OF THE P.E.D.ENGINEER OF RECORD, ACTING AS A DELEGATED ENGINEER TO THE P.E.D. ENGINEER, SHALL SUBMIT TO THIS LATTER THE SITE SPECIFIC DRAWINGS FOR REVIEW.

    (e) THIS P.E.D. SHALL BEAR THE DATE AND ORIGINAL SEAL AND SIGNATURE OF THE PROFESSIONAL ENGINEER OF RECORD THAT PREPARED IT.

13. SHUTTER MANUFACTURER'S LABEL SHALL BE LOCATED ON A READILY VISIBLE LOCATION AT GPP FABRIC SHUTTER. ONE LABEL SHALL BE PLACED FOR EVERY OPENING. LABELING SHALL INDICATE MANUFACTURER'S NAME, PRODUCT NAME, ASTM E–330, E–1886, E–1996 COMPLIANT.

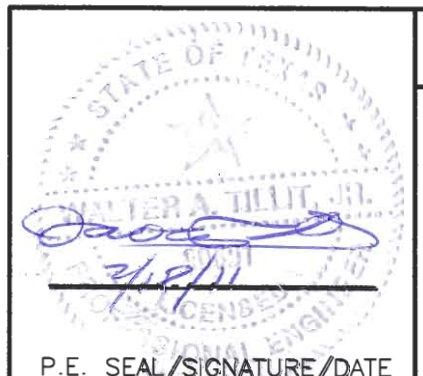

P.E. SEAL/SIGNATURE/DATE

TEXAS DEPARTMENT OF INSURANCE – 2006

WALTER A. TILLIT Jr. P.E.
PROFESSIONAL ENGINEER

6355 N.W. 36TH. ST., STE. 305
VIRGINIA GARDENS, FL 33166
PHONE : (305) 871–1530 , FAX : (305) 871–1531

TEXAS LIC. # 90691

GPP FABRIC SHUTTER – SERIES 2000

M.C.V.
DRAWN BY:

GLOBAL PROTECTION PRODUCTS, LLC.
DBA – ATRIUM WINDOWS AND DOORS
4800 S.W. 51 STREET
DAVIE, FL. 33314
PHONE: (954)689–7545, FAX: (954)689–8797

02/16/11
DATE

11–013
DRAWING No

REV. No	DESCRIPTION	DATE	REV. No	DESCRIPTION	DATE
1	–	–	3	–	–
2	–	–	4	–	–

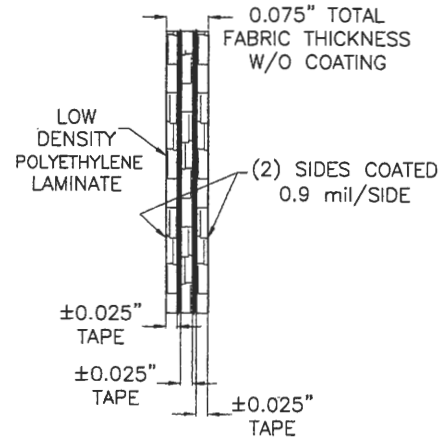

A COATED POLYETHYLENE FABRIC:
(SEE SHEET 2 FOR END DETAILS WITH HEMMED EDGES)
N.T.S.

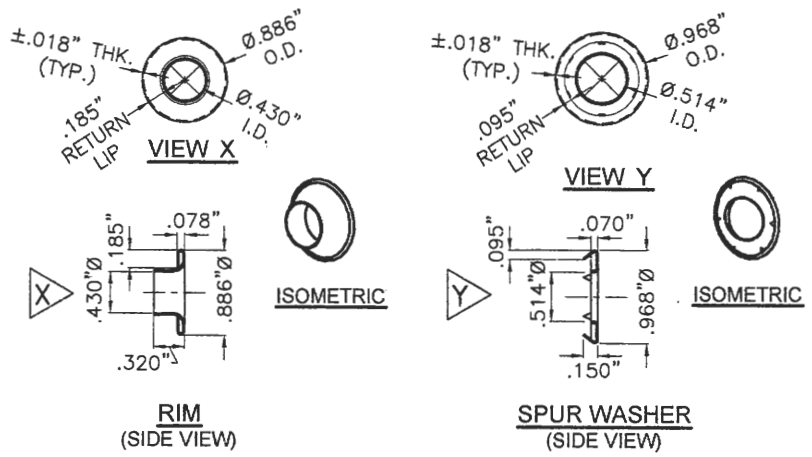

B ROLLED GROMMET
SCALE: 1/2" = 1"

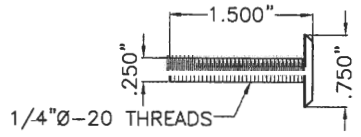

C 1/4"Ø-20x1 1/2" SIDE WALK BOLT
(AISI 304 SERIES STAINLESS STEEL)
SCALE: 1/2" = 1"

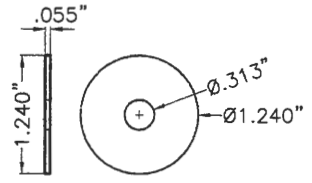

D FENDER WASHER
(AISI 304 SERIES STAINLESS STEEL)
SCALE: 1/2" = 1"

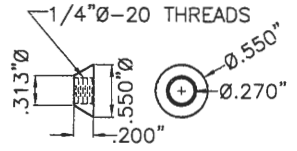

E SAFETY NUT
(AISI 304 SERIES STAINLESS STEEL)
SCALE: 1/2" = 1"

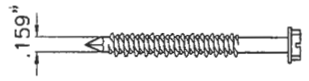

I 1/4"Ø ELCO CONSTRUCTION PRODUCTS ULTRACON
SCALE: 1/2" = 1"

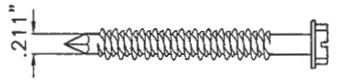

I1 5/16" Ø ITW BUILDEX TAPCON XL ANCHOR
SCALE: 1/2" = 1"

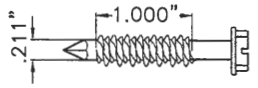

I2 5/16"Ø ELCO CONSTRUCTION PRODUCTS ULTRACON
SCALE: 1/2" = 1"

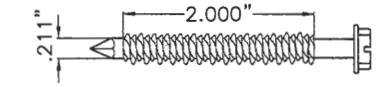

I3 5/16"Ø ELCO CONSTRUCTION PRODUCTS ULTRACON
SCALE: 1/2" = 1"

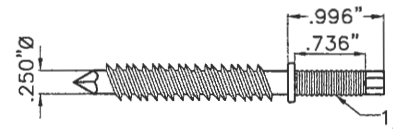

J 1/4"Ø ELCO CONSTRUCTION PRODUCTS PANELMATE® PRO
W/ 1/4"Ø-20 THREADS
SCALE: 1/2" = 1"

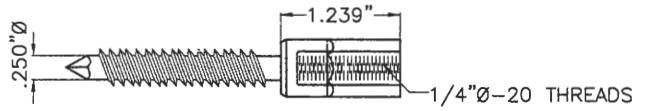

J1 1/4"Ø ELCO CONSTRUCTION PRODUCTS PANELMATE® FEMALE ID
W/ 1/4"Ø-20 THREADS
SCALE: 1/2" = 1"

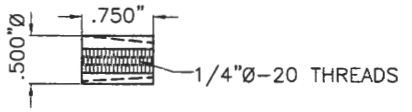

K 1/4"Øx3/4" ALL POINT SOLID-SET ANCHOR
W/ 1/4"Ø-20 THREADS
SCALE: 1/2" = 1"

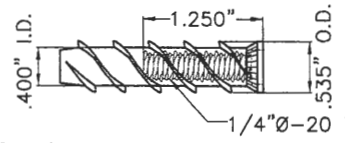

K1 1/2"Ø ELCO CONSTRUCTION PRODUCTS PANELMATE® L INSERT
W/ 1/4"Ø-20 THREADS
SCALE: 1/2" = 1"

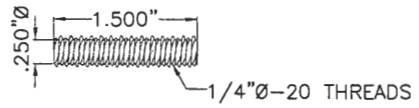

L 1/4"Ø-20x1 1/2" AISI 304 SERIES S.S. ROD
SCALE: 1/2" = 1"

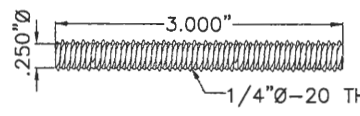

L1 1/4"Ø-20x3" AISI 304 SERIES S.S. ROD
SCALE: 1/2" = 1"

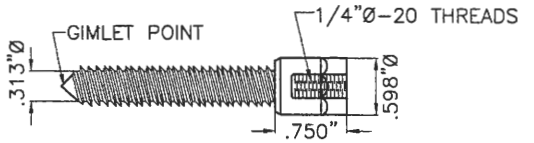

M 5/16"Ø ELCO CONSTRUCTION PRODUCTS HANGERMATE®
W/ 1/4"Ø-20 THREADS (EZG365 ANCHOR)
CARBON STEEL (AISI C10B21) CASE HARDENED AND TEMPERED
SCALE: 1/2" = 1"

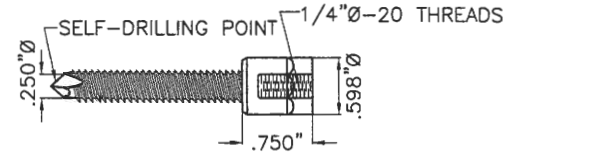

M1 1/4"Ø-10 ELCO CONSTRUCTION PRODUCTS HANGERMATE®
W/ 1/4"Ø-20 THREADS (EZG910 ANCHOR)
CARBON STEEL (AISI C10B21) CASE HARDENED AND TEMPERED
SCALE: 1/2" = 1"

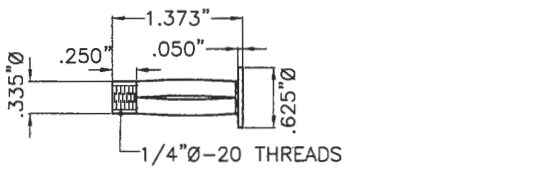

N 1/4"Ø ELCO CONSTRUCTION PRODUCTS FAB-LOK HD
W/ 1/4"Ø-20 THREADS
SCALE: 1/2" = 1"

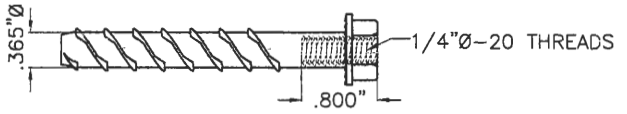

O 3/8"Ø ELCO CONSTRUCTION PRODUCTS MODIFIED CONFLEX
W/ 1/4"Ø-20 THREADS
SCALE: 1/2" = 1"

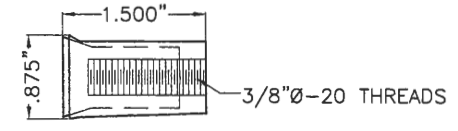

P 1/2"Øx1 9/16" POWER ANCHOR
W/ 3/8"Ø-20 THREADS
SCALE: 1/2" = 1"

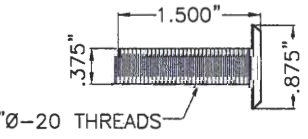

Q 3/8"Ø-20x1 1/2" SIDE WALK BOLT
(AISI 304 SERIES STAINLESS STEEL)
SCALE: 1/2" = 1"

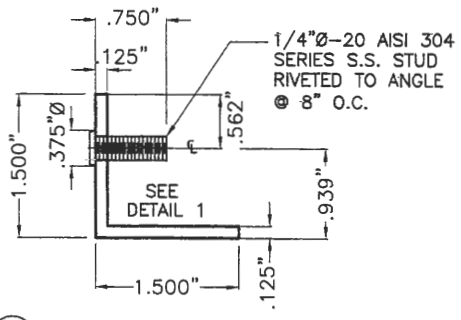

F ANGLE WITH STUD
(6063–T6 ALLOY)
SCALE: 1/2" = 1"

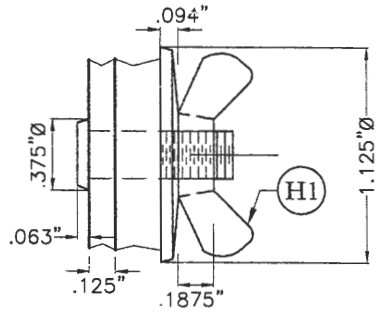

DETAIL 1:
STUD W/ WINGNUT (H1)
N.T.S.

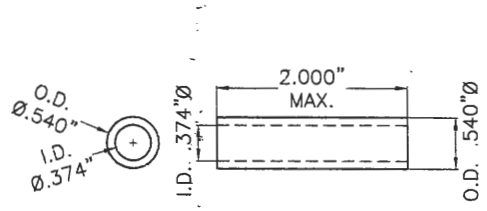

G ALUMINUM SLEEVE
(6063–T6 ALLOY)
SCALE: 1/2" = 1"

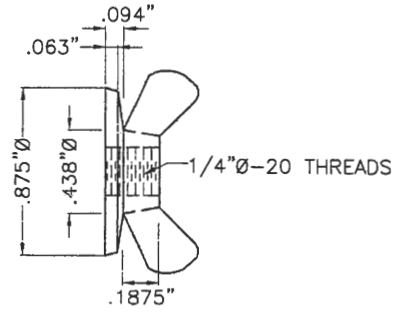

H 7/8"Ø WASHERED WINGNUT
W/ 1/4"Ø-20 THREADS
(ZAMAC NICKEL PLATED)
SCALE: 1/2" = 1"

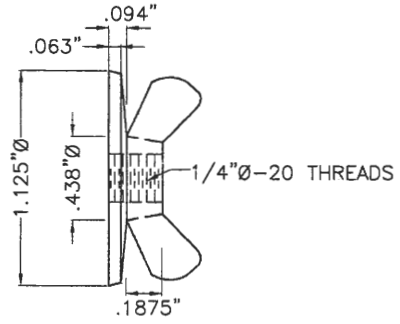

H1 1 1/8"Ø WASHERED WINGNUT
W/ 1/4"Ø-20 THREADS
(ZAMAC NICKEL PLATED)
SCALE: 1/2" = 1"

COMPONENTS

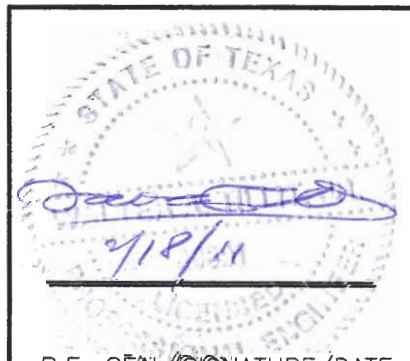

P.E. SEAL/SIGNATURE/DATE

TEXAS DEPARTMENT OF INSURANCE – 2006

WALTER A. TILLIT Jr. P.E.
PROFESSIONAL ENGINEER
6355 N.W. 36TH. ST., STE. 305
VIRGINIA GARDENS, FL. 33166
PHONE : (305) 871–1530 , FAX : (305) 871–1531
TEXAS LIC. # 90691

GPP FABRIC SHUTTER – SERIES 2000

M.C.V.
DRAWN BY:

GLOBAL PROTECTION PRODUCTS, LLC.
DBA – ATRIUM WINDOWS AND DOORS
4800 S.W. 51 STREET
DAVIE, FL. 33314
PHONE: (954)689–7545, FAX: (954)689–8797

02/16/11
DATE

11–013
DRAWING No

REV. No	DESCRIPTION	DATE	REV. No	DESCRIPTION	DATE
1	–	–	3	–	–
2	–	–	4	–	–

BILL OF MATERIALS

ITEM No.	DESCRIPTION
A	3-PLY FABRIC: MADE FROM HIGH DENSITY POLYETHYLENE TAPES, COATED ON (2) SIDES WITH LOW DENSITY POLYETHYLENE AND LAMINATED TOGETHER WITH (3) LOW DENSITY POLYETHYLENE, PER FABRENE INC. MODEL X719N1N1 W/ 3.00"-3.25" HEMMED EDGES AT TOP & BOTTOM ENDS, PER DETAIL X ON THIS SHEET. (A) IS ALWAYS ONE ENTIRE PIECE, EXCEPT WHERE OVERLAPS ARE ALLOWED.
B	ROLLED RIM GROMMET (RRG#2/45-00992) WITH SPUR WASHER (RRG#2/45-00882) HEAVY-DUTY BRASS W/ 1" E.D. IN RESPECT TO FABRIC
C	1/4"Ø-20x1 1/2" SIDE WALK BOLT (AISI 304 SERIES STAINLESS STEEL)
D	FENDER WASHER (AISI 304 SERIES STAINLESS STEEL)
E	SAFETY NUT W/ 1/4"Ø-20 THREADS (AISI 304 SERIES STAINLESS STEEL)
F	1 1/2"x1 1/2"x1/8" EXTRUDED 6063-T6 ALUMINUM ALLOY ANGLE W/ STUDS @ 8" o.c.
G	ALUMINUM SLEEVE (6063-T5 ALUMINUM ALLOY)
H	7/8"Øx3 3/132" WASHERED WINGNUT W/ 1/4"Ø-20 THREADS (ZAMAC NICKEL PLATED)
H1	1 1/8"Øx3 3/132" WASHERED WINGNUT W/ 1/4"Ø-20 THREADS (ZAMAC NICKEL PLATED)
I	1/4"Ø ELCO CONSTRUCTION PRODUCTS ULTRACON ANCHOR
I1	5/16"Ø ELCO CONSTRUCTION PRODUCTS ULTRACON ANCHOR
I2	5/16"Ø ELCO CONSTRUCTION PRODUCTS ULTRACON ANCHOR W/ 1" THREADED PENETRATION
I3	5/16"Ø ELCO CONSTRUCTION PRODUCTS ULTRACON ANCHOR W/ 2" THREADED PENETRATION
J	1/4"Ø ELCO CONSTRUCTION PRODUCTS PANELMATE® PRO W/ 1/4"Ø-20 THREADS
J1	1/4"Ø ELCO CONSTRUCTION PRODUCTS PANELMATE® FEMALE ID W/ 1/4"Ø-20 THREADS
K	1/4"Øx3/4" ALL POINT SOLID-SET ANCHOR W/ 1/4"Ø-20 THREADS
K1	1/2"Ø ELCO CONSTRUCTION PRODUCTS PANELMATE® L INSERT W/ 1/4"Ø-20 THREADS
L	1/4"Ø-20 x1 1/2" AISI 304 SERIES S.S. ROD W/ 1/4"Ø-20 THREADS
L1	1/4"Ø-20 x3" AISI 304 SERIES S.S. ROD W/ 1/4"Ø-20 THREADS
M	5/16"Ø ELCO CONSTRUCTION PRODUCTS HANGERMATE® W/ 1/4"Ø-20 THREADS (EZG365 ANCHOR, GIMLET POINT) CARBON STEEL (AISI C1OB21) CASE HARDENED AND TEMPERED
M1	1/4"Ø-10 ELCO CONSTRUCTION PRODUCTS HANGERMATE® W/ 1/4"Ø-20 THREADS (EZG910 ANCHOR, SELF-DRILLING POINT) CARBON STEEL (AISI C1OB21) CASE HARDENED AND TEMPERED
N	1/4"Ø ELCO CONSTRUCTION PRODUCTS FAB-LOK HD W/ 1/4"Ø-20 THREADS
O	3/8"Ø ELCO CONSTRUCTION PRODUCTS MODIFIED CONFLEX W/ 1/4"Ø-20 THREADS
P	1/2"Øx1 9/16" POWER ANCHOR W/ 3/8"Ø-20 THREADS
Q	3/8"Ø-20x1 1/2" SIDE WALK BOLT (AISI 304 SERIES STAINLESS STEEL)

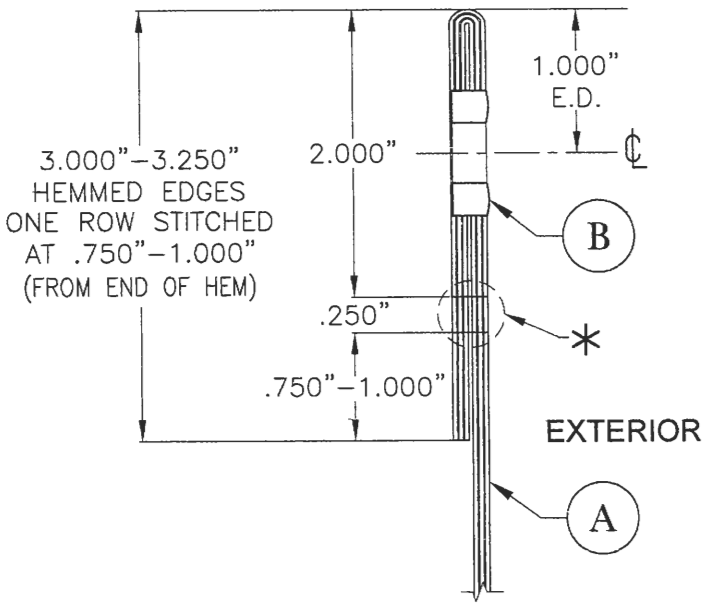

TYPICAL HEMMED EDGE FABRIC DETAIL X

SCALE: 3/4" =1"

* TWO ROWS STITCHING SHALL CONSIST OF SIX LOCK STITCHES PER INCH WITH 12/4 POLYESTER THREADS, TWISTED TOGETHER WITH 7% LUBRICATION & SILICONE PER ASTM D-6193.

STATE OF TEXAS

4/18/11

P.E. SEAL/SIGNATURE/DATE

TEXAS DEPARTMENT OF INSURANCE – 2006

WALTER A. TILLIT Jr. P.E.
PROFESSIONAL ENGINEER

6355 N.W. 36TH. ST., STE. 305
VIRGINIA GARDENS, FL. 33166
PHONE : (305) 871-1530 , FAX : (305) 871-1531

TEXAS LIC. # 90691

GPP FABRIC SHUTTER – SERIES 2000

GLOBAL PROTECTION PRODUCTS, LLC.
DBA – ATRIUM WINDOWS AND DOORS
4800 S.W. 51 STREET
DAVIE, FL. 33314
PHONE: (954)689-7545, FAX: (954)689-8797

REV. No	DESCRIPTION	DATE	REV. No	DESCRIPTION	DATE
1	–	–	3	–	–
2	–	–	4	–	–

M.C.V.
DRAWN BY:

02/16/11
DATE

11-013
DRAWING No

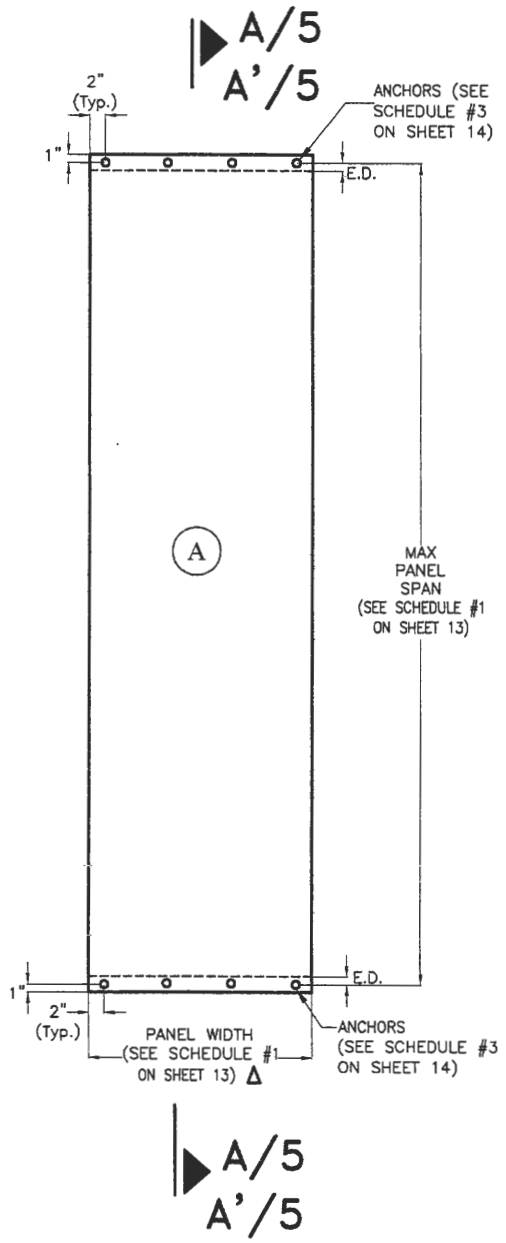

ELEVATION FOR DIRECT WALL MOUNT TO POURED CONCRETE, GROUT FILLED BLOCK, HOLLOW BLOCK, WOOD OR STEEL SUBSTRATE AT TOP & BOTTOM

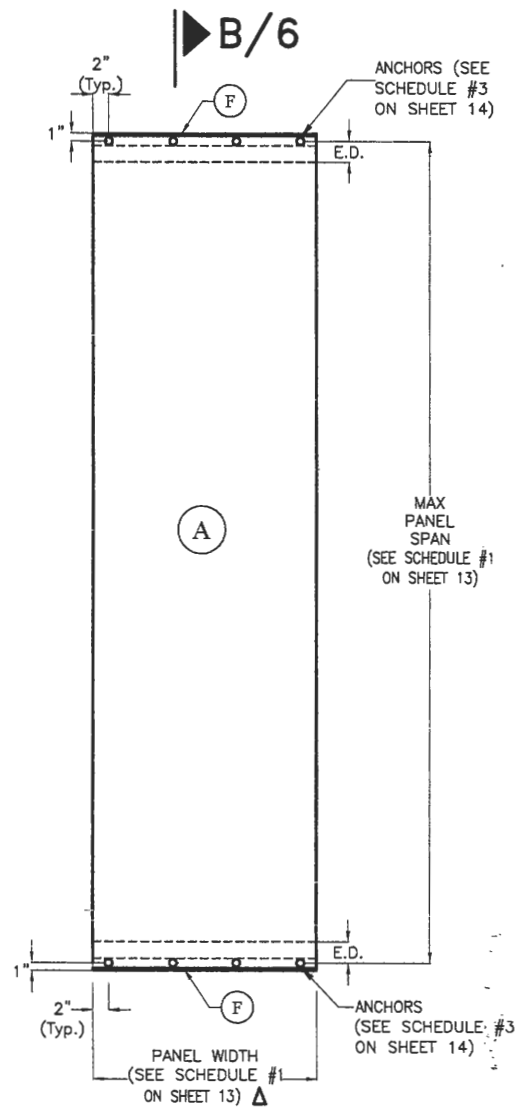

ELEVATION FOR STUDDED ANGLE WALL MOUNT TO POURED CONCRETE, GROUT FILLED BLOCK, HOLLOW BLOCK OR WOOD SUBSTRATE AT TOP & BOTTOM

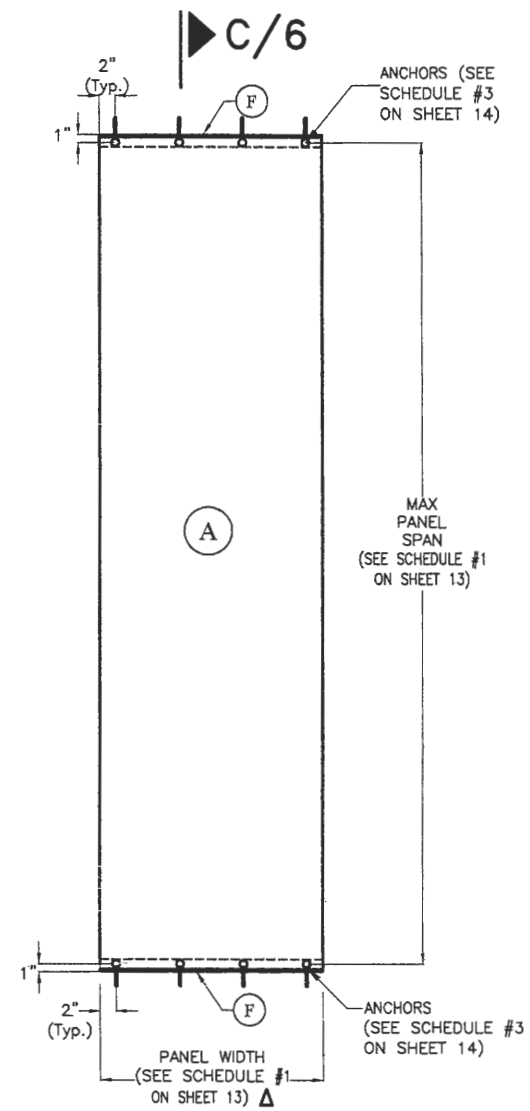

ELEVATION FOR STUDDED ANGLE FLOOR TO CEILING MOUNT TO POURED CONCRETE, GROUT FILLED BLOCK, HOLLOW BLOCK OR WOOD SUBSTRATE AT TOP & BOTTOM

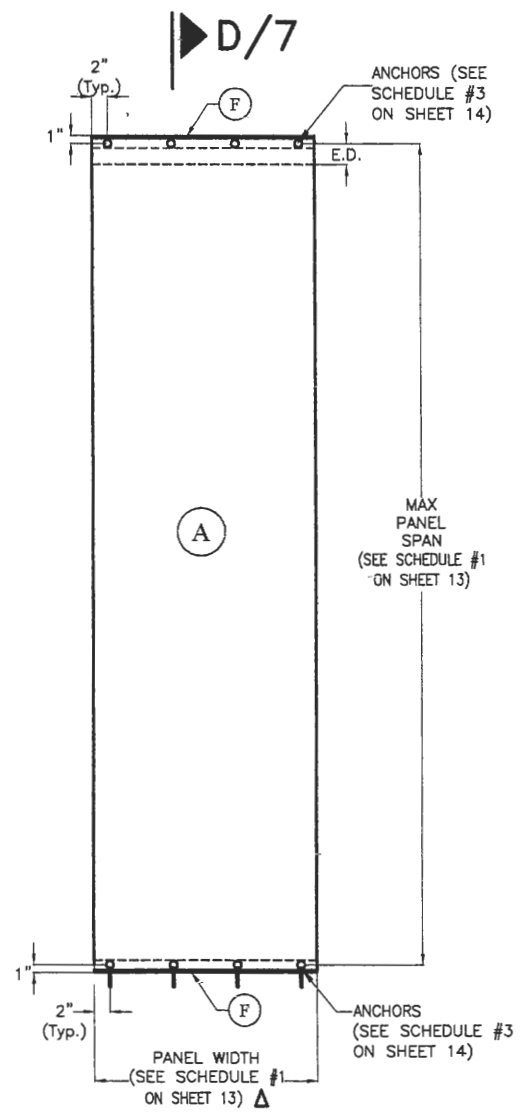

ELEVATION FOR STUDDED ANGLE WALL MOUNT TO POURED CONCRETE, GROUT FILLED BLOCK, HOLLOW BLOCK OR WOOD SUBSTRATE AT TOP & STUDDED ANGLE FLOOR MOUNT TO POURED CONCRETE, GROUT FILLED BLOCK, OR WOOD SUBSTRATE AT BOTTOM

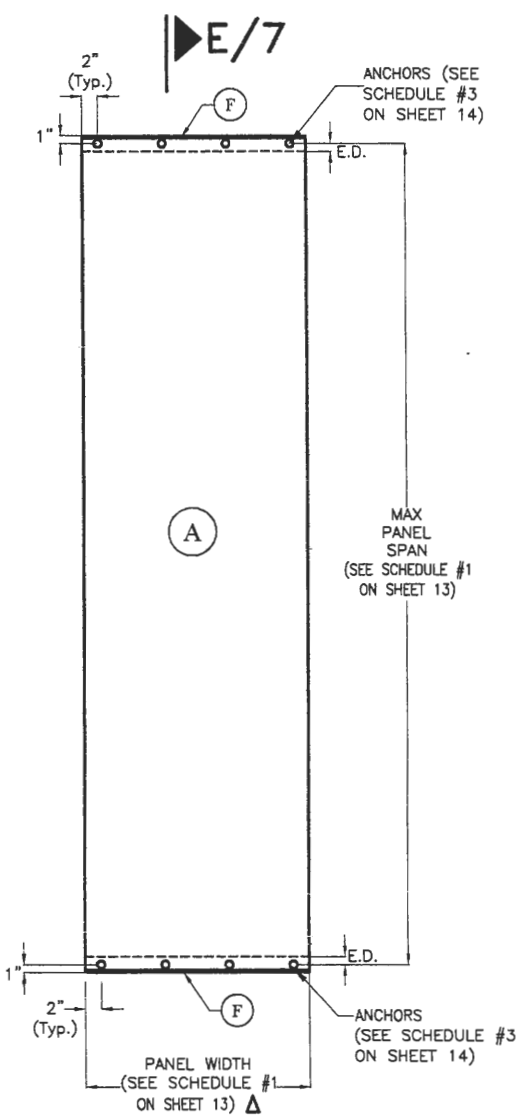

ELEVATION FOR STUDDED ANGLE WALL MOUNT TO STEEL SUBSTRATE AT TOP & BOTTOM

SINGLE PANEL ELEVATIONS

SCALE 1/2"= 1'-0"

Δ FABRIC SHALL ENTIRELY COVER THE OPENING WIDTH WITH NO NEED OF OVERLAPPING BEYOND IT

STATE OF TEXAS
2/18/11
P.E. SEAL/SIGNATURE/DATE

TEXAS DEPARTMENT OF INSURANCE – 2006

WALTER A. TILLIT Jr. P.E.
PROFESSIONAL ENGINEER

6355 N.W. 36TH. ST., STE. 305
VIRGINIA GARDENS, FL. 33166
PHONE : (305) 871-1530 , FAX : (305) 871-1531

TEXAS LIC. # 90691

GPP FABRIC SHUTTER - SERIES 2000

GLOBAL PROTECTION PRODUCTS, LLC.
DBA - ATRIUM WINDOWS AND DOORS
4800 S.W. 51 STREET
DAVIE, FL. 33314
PHONE: (954)689-7545, FAX: (954)689-8797

REV. No	DESCRIPTION	DATE	REV. No	DESCRIPTION	DATE
1	-	-	3	-	-
2	-	-	4	-	-

M.C.V.
DRAWN BY:

02/16/11
DATE

11-013
DRAWING No

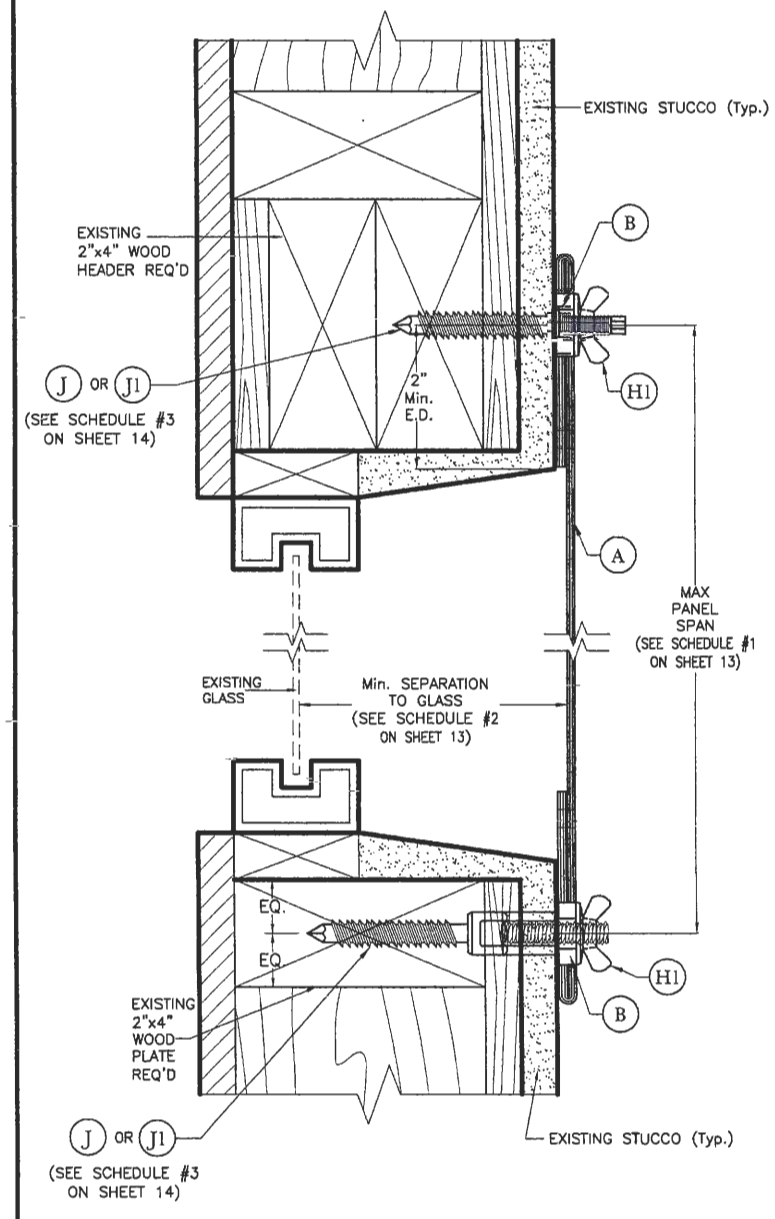

FOR DIRECT WALL MOUNT TO WOOD SUBSTRATE AT TOP & BOTTOM

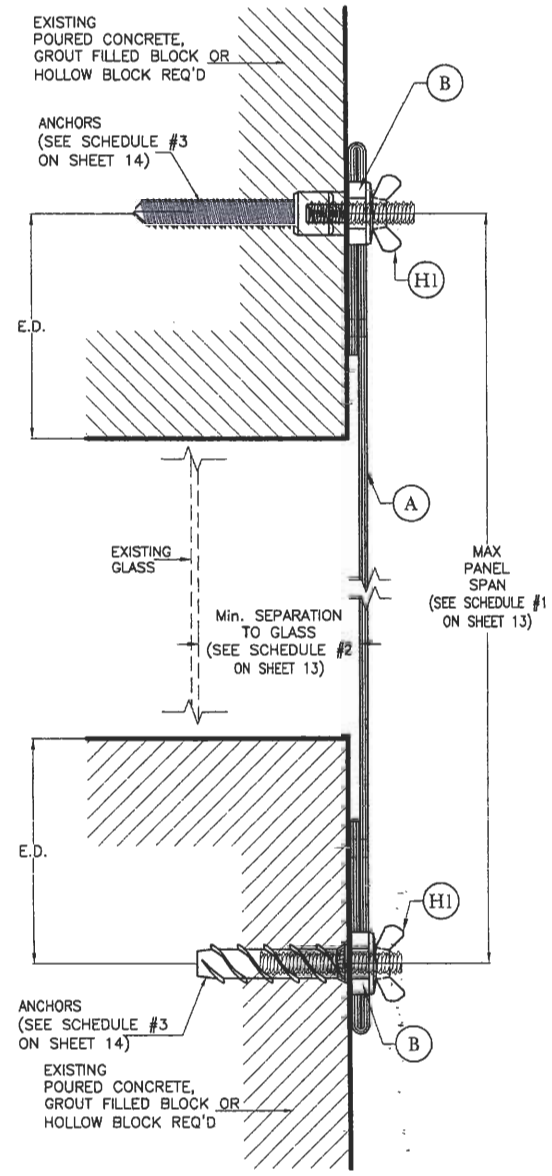

FOR DIRECT WALL MOUNT TO POURED CONCRETE, GROUT FILLED BLOCK OR HOLLOW BLOCK SUBSTRATE AT TOP & BOTTOM

SECTIONS A - A

SCALE 3/8"=1"

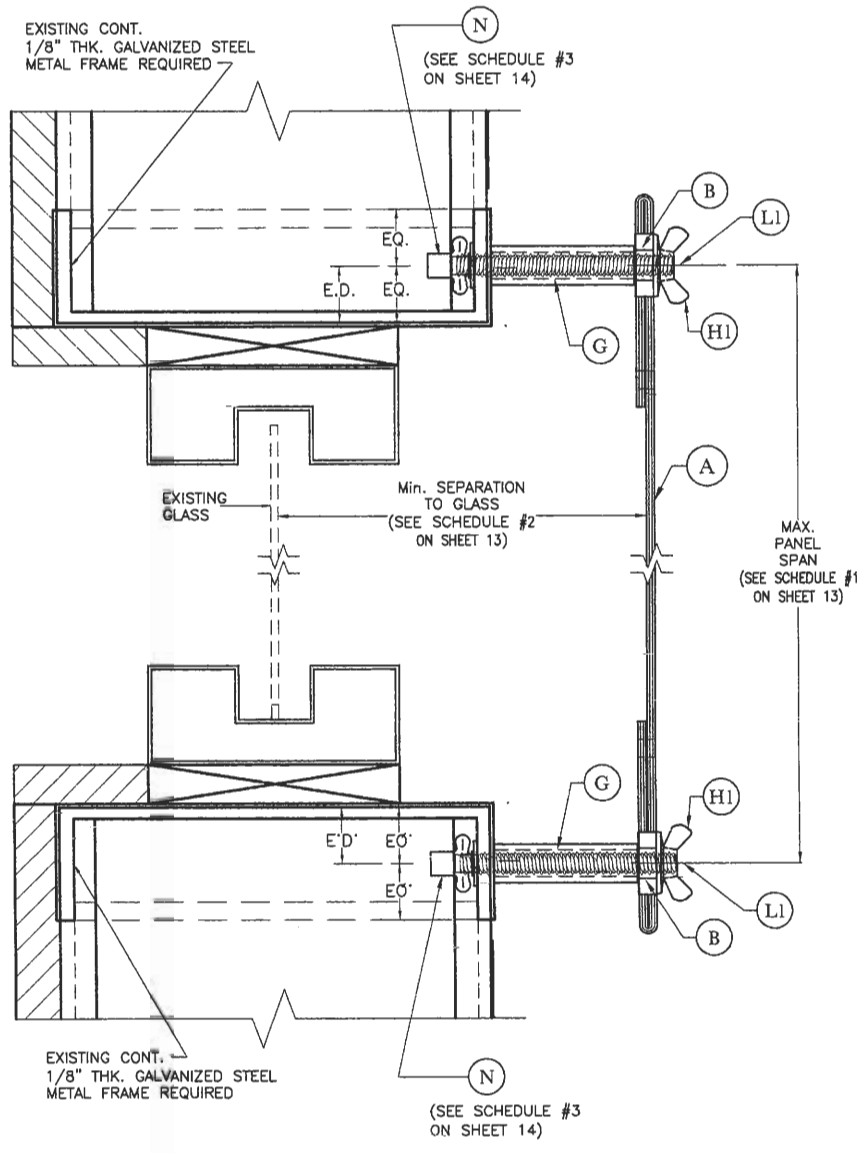

FOR DIRECT WALL MOUNT TO STEEL SUBSTRATE AT TOP & BOTTOM

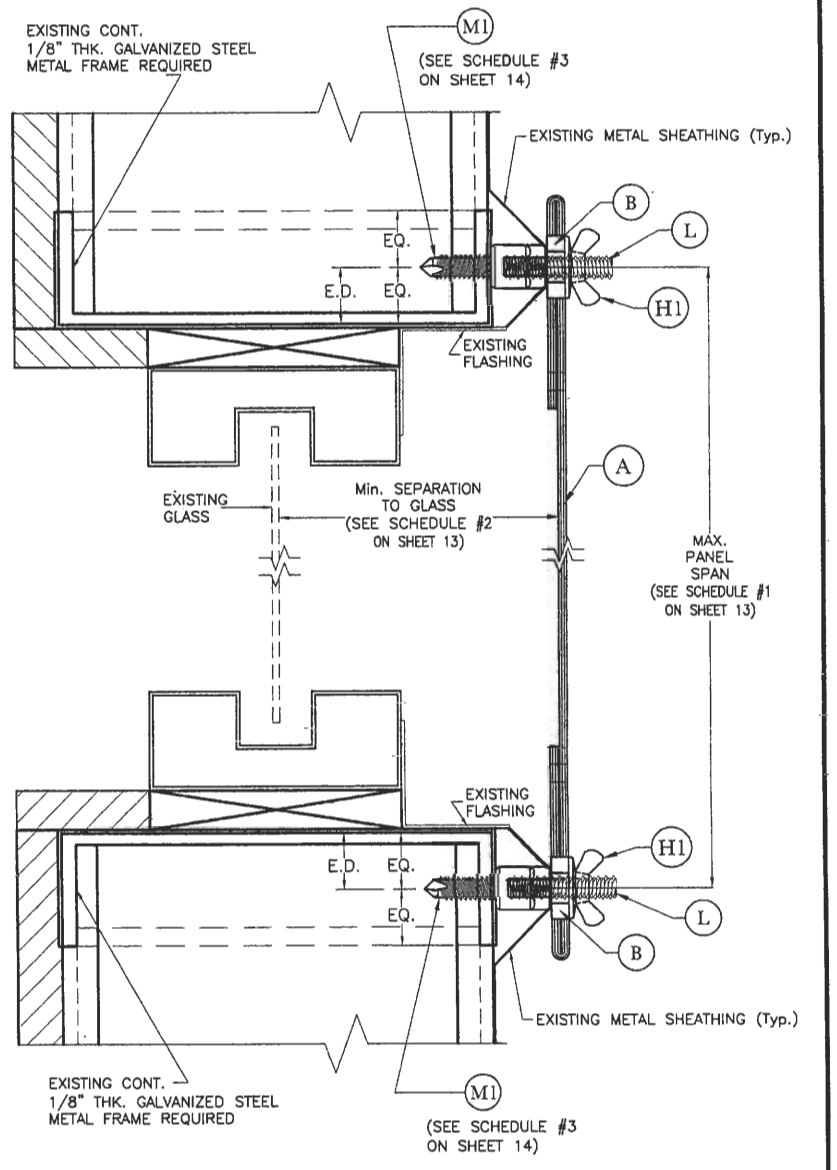

FOR DIRECT WALL MOUNT TO STEEL SUBSTRATE AT TOP & BOTTOM

SECTIONS A '- A'

SCALE 3/8"=1"

NOTE FOR COMBINATION OF SECTIONS:

TOP AND BOTTOM MOUNTINGS CAN BE COMBINED IN ANY WAY TO SUIT ANY INSTALLATION.

STATE OF TEXAS
LICENSED PROFESSIONAL ENGINEER
7/18/11

P.E. SEAL/SIGNATURE/DATE

TEXAS DEPARTMENT OF INSURANCE – 2006

WALTER A. TILLIT Jr. P.E.
PROFESSIONAL ENGINEER
6355 N.W. 36TH. ST., STE. 305
VIRGINIA GARDENS, FL. 33166
PHONE : (305) 871-1530 , FAX : (305) 871-1531
TEXAS LIC. # 90691

GPP FABRIC SHUTTER – SERIES 2000

GLOBAL PROTECTION PRODUCTS, LLC.
DBA – ATRIUM WINDOWS AND DOORS
4800 S.W. 51 STREET
DAVIE, FL. 33314
PHONE: (954)689-7545, FAX: (954)689-8797

REV. No	DESCRIPTION	DATE	REV. No	DESCRIPTION	DATE
1	–	–	3	–	–
2	–	–	4	–	–

M.C.V.
DRAWN BY:

02/16/11
DATE

11-013
DRAWING No

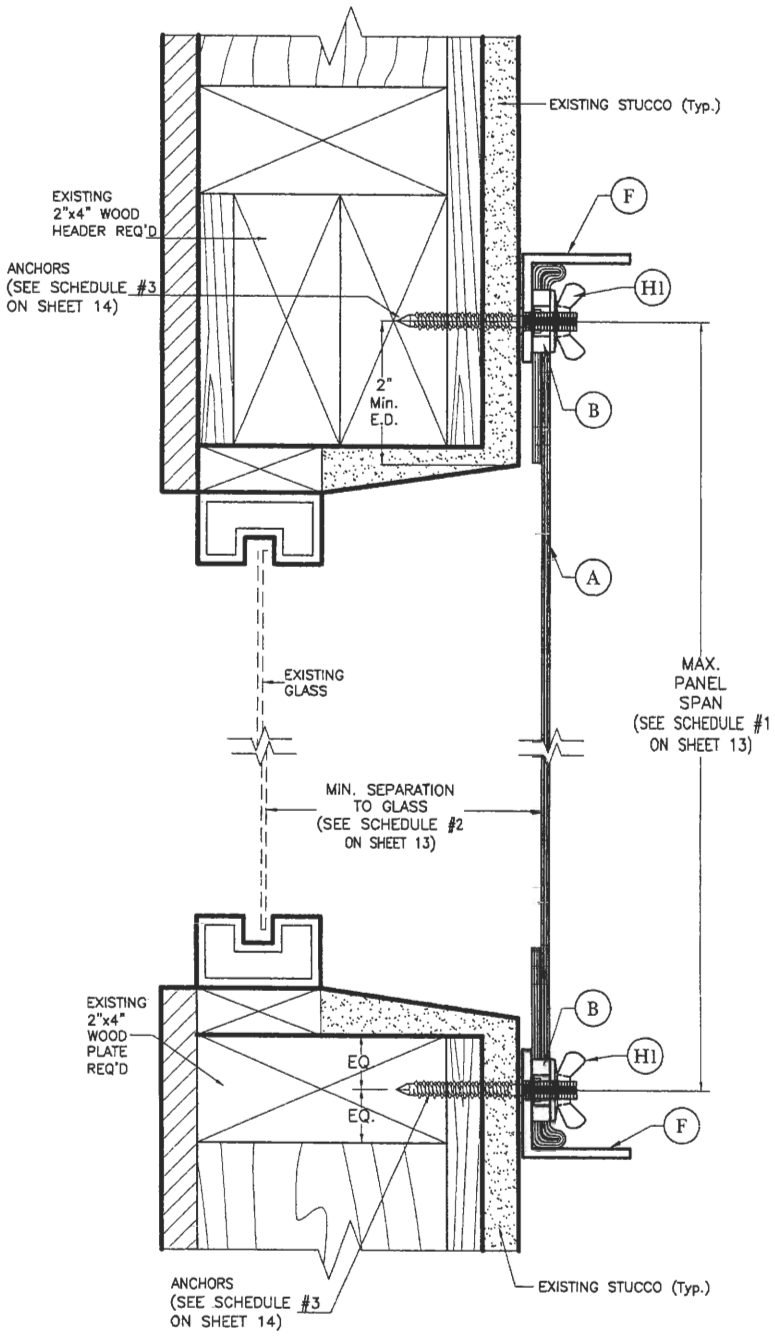

FOR STUDDED ANGLE WALL MOUNT TO WOOD SUBSTRATE AT TOP & BOTTOM

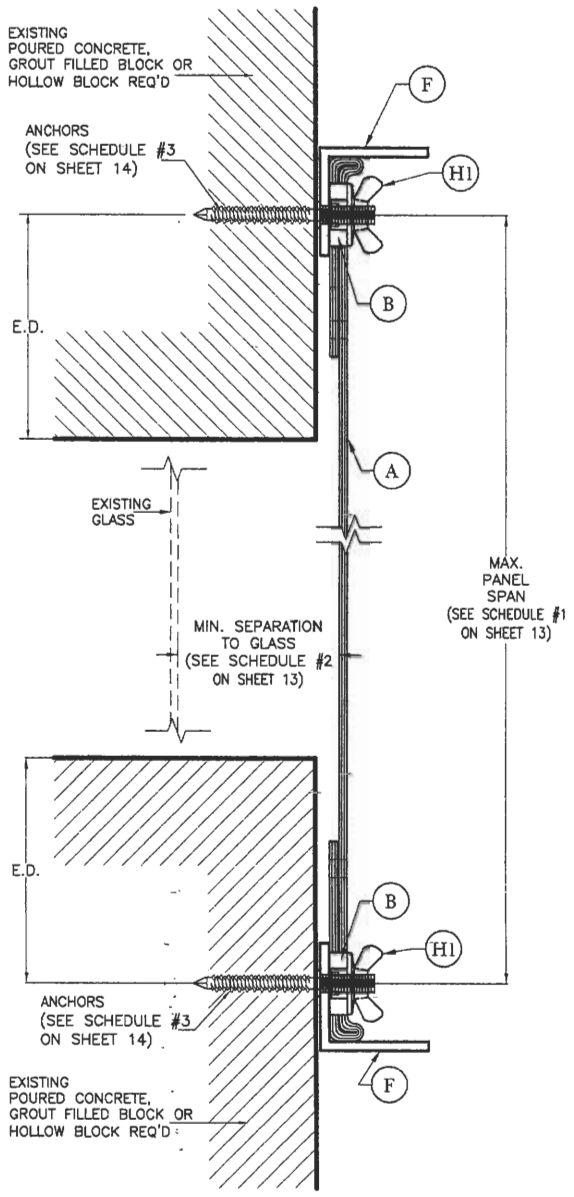

FOR STUDDED ANGLE WALL MOUNT TO POURED CONCRETE, GROUT FILLED BLOCK OR HOLLOW BLOCK SUBSTRATE AT TOP & BOTTOM

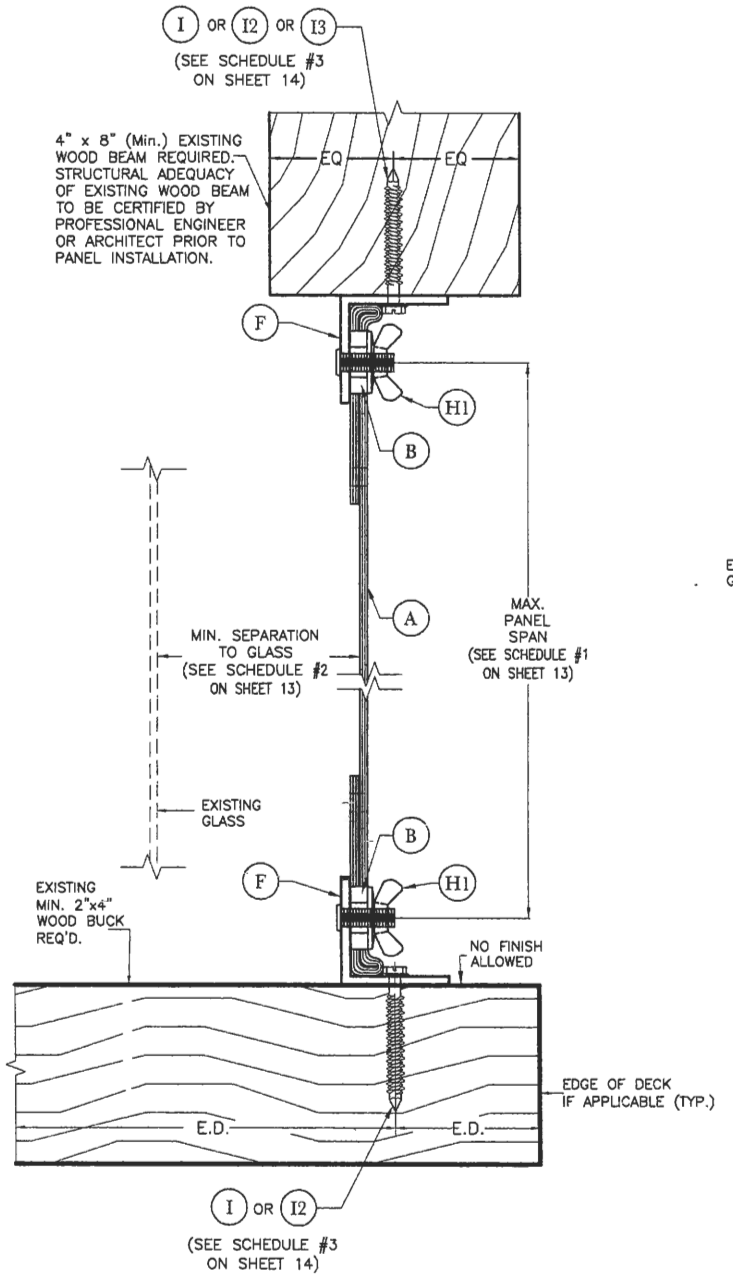

FOR STUDDED ANGLE FLOOR TO CEILING MOUNT TO WOOD SUBSTRATE AT TOP & BOTTOM

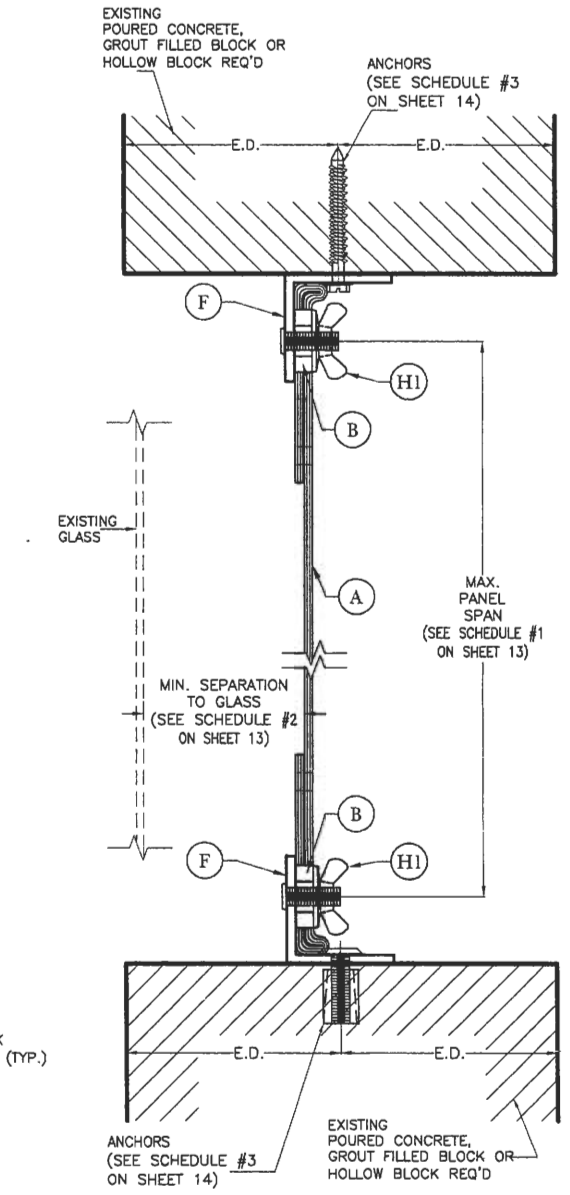

FOR STUDDED ANGLE FLOOR TO CEILING MOUNT TO POURED CONCRETE, GROUT FILLED BLOCK OR HOLLOW BLOCK SUBSTRATE AT TOP & BOTTOM

SECTIONS B - B
SCALE 3/8"=1"

SECTIONS C - C
SCALE 3/8"=1"

NOTE FOR COMBINATION OF SECTIONS:

TOP AND BOTTOM MOUNTINGS CAN BE COMBINED IN ANY WAY TO SUIT ANY INSTALLATION.

STATE OF TEXAS
WALTER A. TILLIT JR.
LICENSED PROFESSIONAL ENGINEER
2/1/11

P.E. SEAL/SIGNATURE/DATE

TEXAS DEPARTMENT OF INSURANCE – 2006

WALTER A. TILLIT Jr. P.E.
PROFESSIONAL ENGINEER

6355 N.W. 36TH. ST., STE. 305
VIRGINIA GARDENS, FL. 33166
PHONE : (305) 871-1530 , FAX : (305) 871-1531

TEXAS LIC. # 90691

GPP FABRIC SHUTTER - SERIES 2000

M.C.V.
DRAWN BY:

GLOBAL PROTECTION PRODUCTS, LLC.
DBA - ATRIUM WINDOWS AND DOORS
4800 S.W. 51 STREET
DAVIE, FL. 33314
PHONE: (954)689-7545, FAX: (954)689-8797

02/16/11
DATE

11-013
DRAWING No

REV. No	DESCRIPTION	DATE	REV. No	DESCRIPTION	DATE
1	-	-	3	-	-
2	-	-	4	-	-

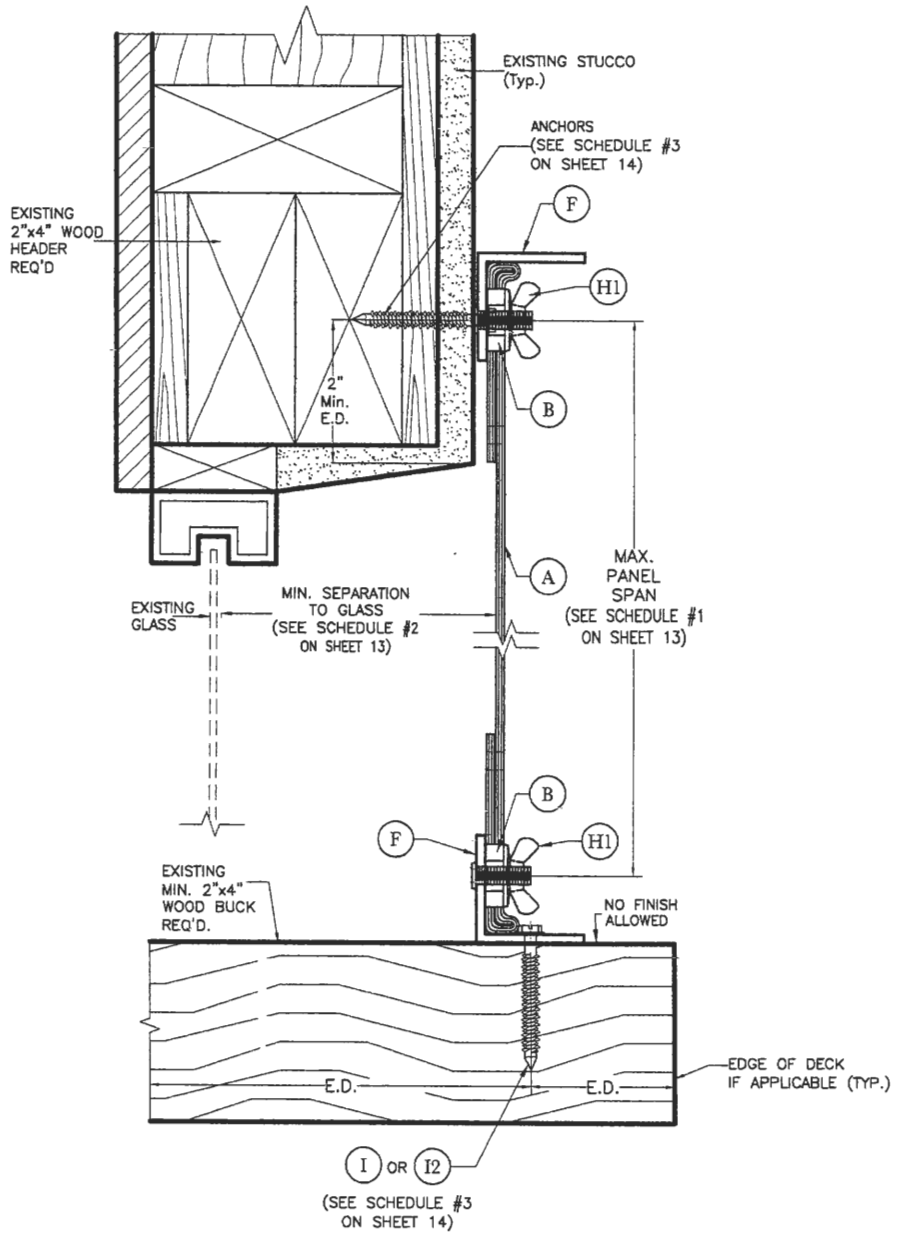

FOR STUDDED ANGLE WALL MOUNT TO WOOD SUBSTRATE AT TOP & STUDDED ANGLE FLOOR MOUNT TO WOOD SUBSTRATE AT BOTTOM

SECTIONS D - D

SCALE 3/8"=1"

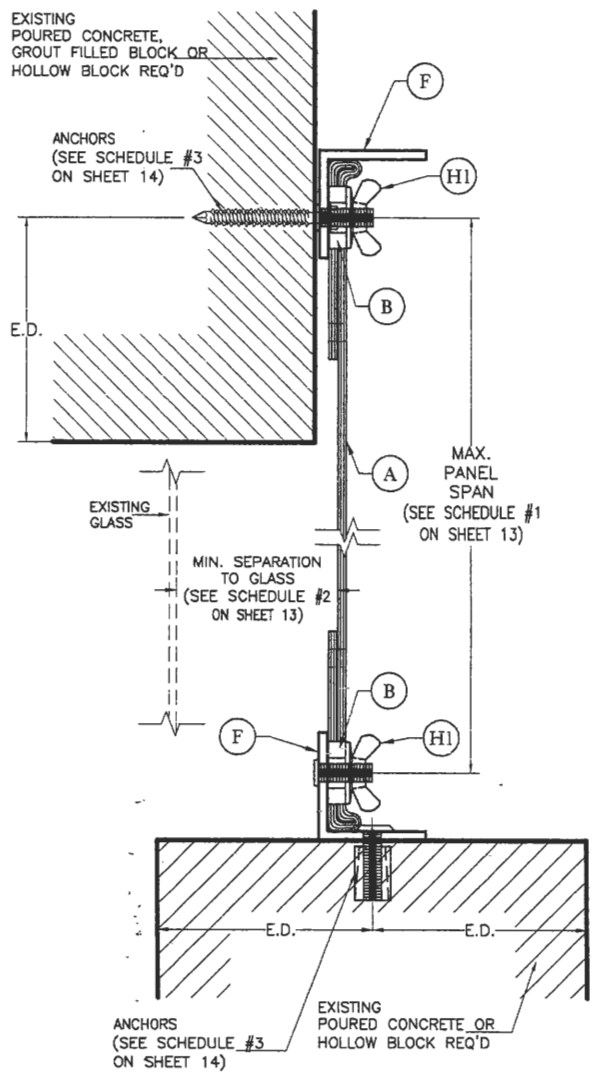

FOR STUDDED ANGLE WALL MOUNT TO POURED CONCRETE, GROUT FILLED BLOCK OR HOLLOW BLOCK SUBSTRATE AT TOP & STUDDED ANGLE FLOOR MOUNT TO POURED CONCRETE, GROUT FILLED BLOCK OR HOLLOW BLOCK SUBSTRATE AT BOTTOM

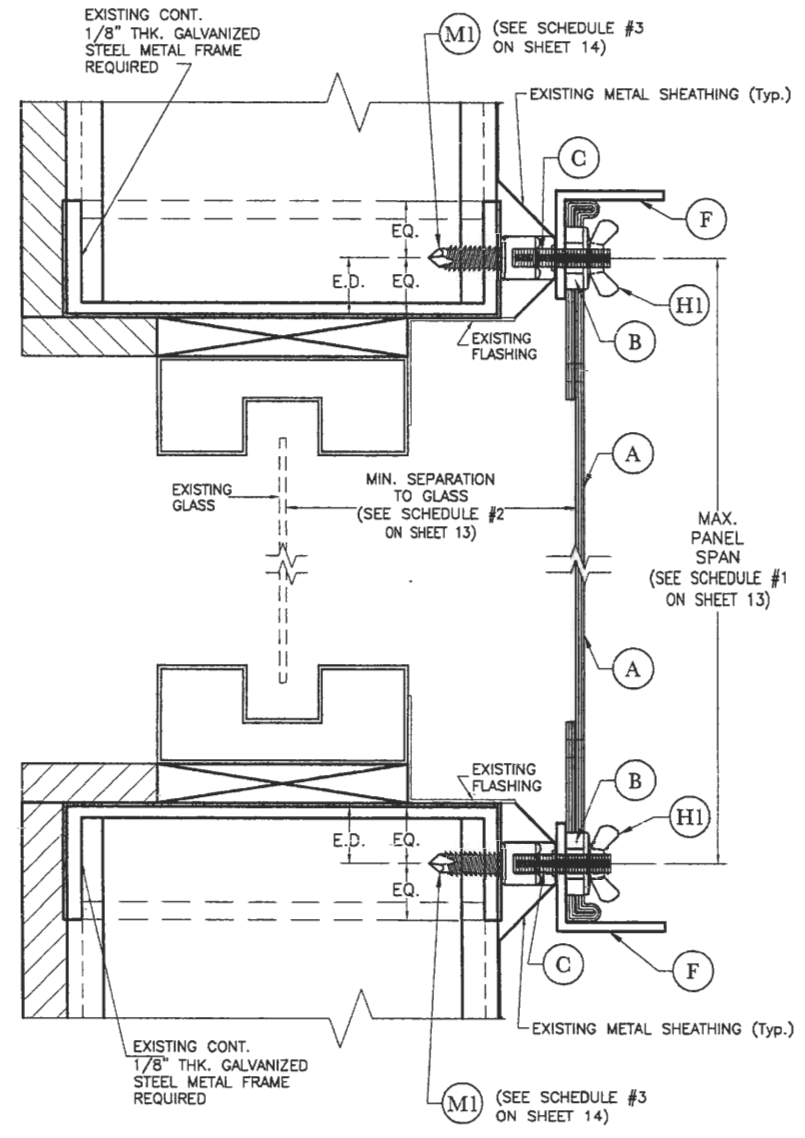

FOR STUDDED ANGLE WALL MOUNT TO STEEL SUBSTRATE AT TOP & BOTTOM

SECTIONS E - E

SCALE 3/8"=1"

NOTE FOR COMBINATION OF SECTIONS:

TOP AND BOTTOM MOUNTINGS CAN BE COMBINED IN ANY WAY TO SUIT ANY INSTALLATION.

STATE OF TEXAS

4/18/11

P.E. SEAL/SIGNATURE/DATE

TEXAS DEPARTMENT OF INSURANCE – 2006

WALTER A. TILLIT Jr. P.E.
PROFESSIONAL ENGINEER

6355 N.W. 36TH. ST., STE. 305
VIRGINIA GARDENS, FL. 33166
PHONE : (305) 871-1530 , FAX : (305) 871-1531

TEXAS LIC. # 90691

GPP FABRIC SHUTTER - SERIES 2000

M.C.V.
DRAWN BY:

GLOBAL PROTECTION PRODUCTS, LLC.
DBA - ATRIUM WINDOWS AND DOORS
4800 S.W. 51 STREET
DAVIE, FL. 33314
PHONE: (954)689-7545, FAX: (954)689-8797

02/16/11
DATE

11-013
DRAWING No

REV. No	DESCRIPTION	DATE	REV. No	DESCRIPTION	DATE
1	–	–	3	–	–
2	–	–	4	–	–

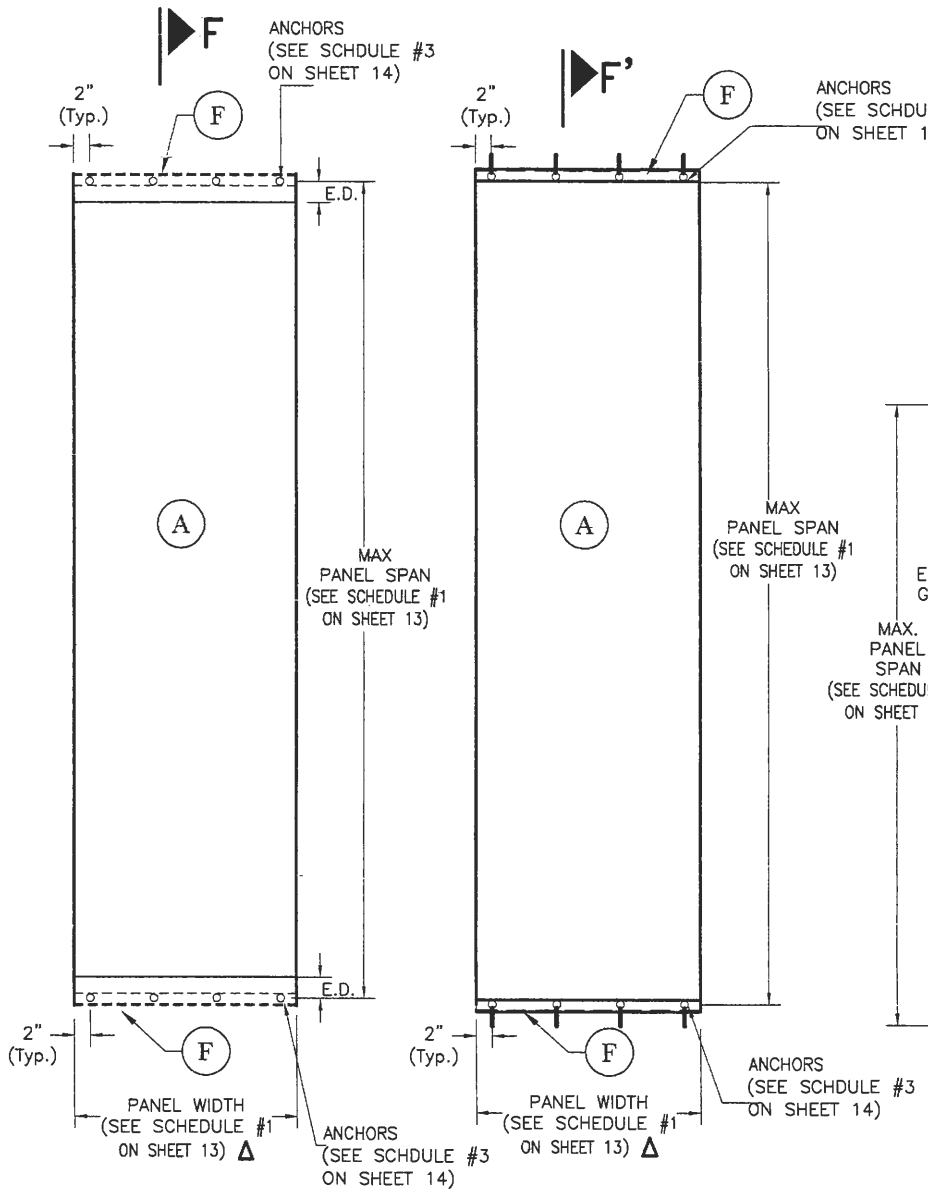

F

ELEVATION FOR REVERSED STUDDED ANGLE WALL MOUNT TO POURED CONCRETE, GROUT FILLED BLOCK, HOLLOW BLOCK OR WOOD SUBSTRATE AT TOP & BOTTOM

F'

ELEVATION FOR REVERSED STUDDED ANGLE FLOOR TO CEILING MOUNT TO POURED CONCRETE, GROUT FILLED BLOCK, HOLLOW BLOCK OR WOOD SUBSTRATE AT TOP & BOTTOM

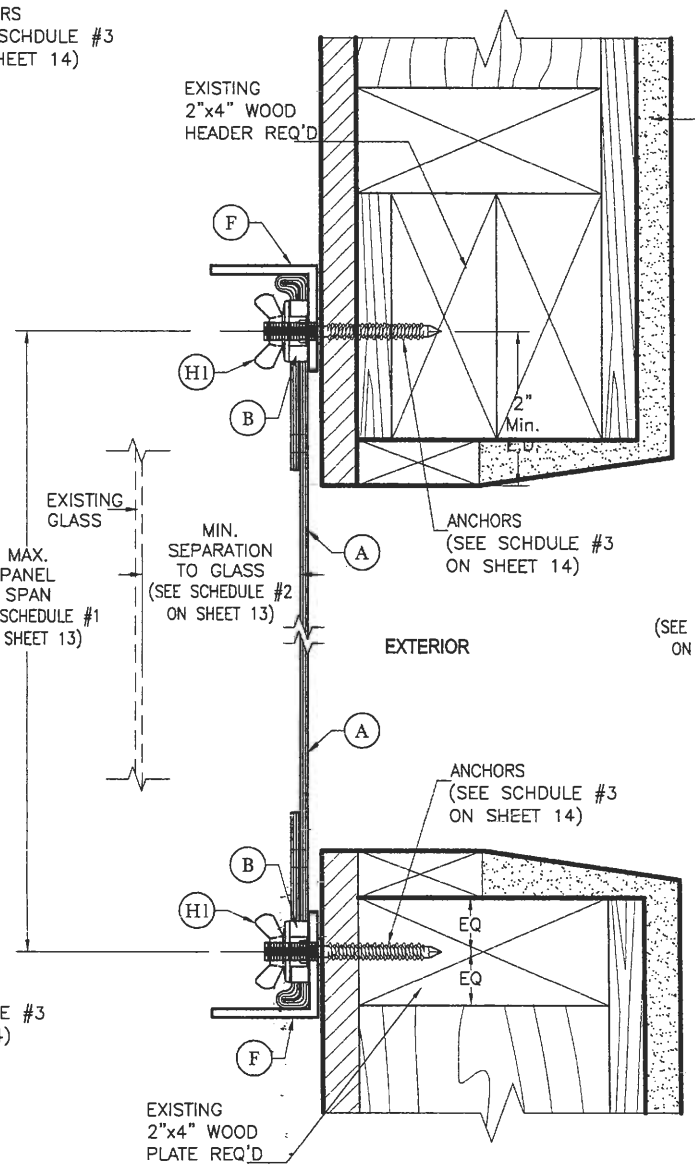

FOR REVERSED STUDDED ANGLE WALL MOUNT TO WOOD SUBSTRATE AT TOP & BOTTOM

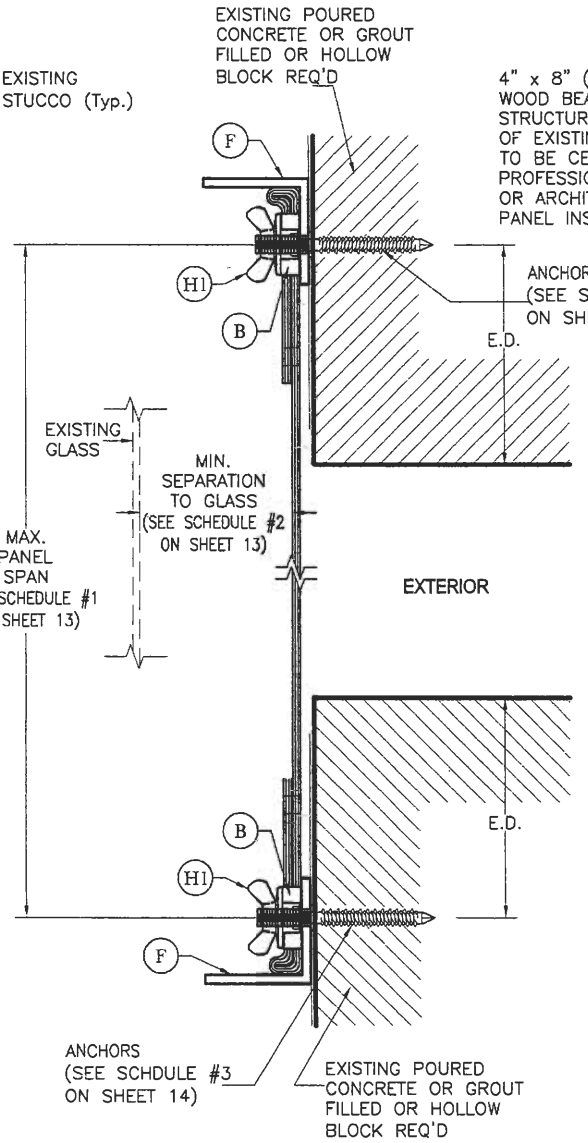

FOR REVERSED STUDDED ANGLE WALL MOUNT TO POURED CONCRETE, GROUT FILLED BLOCK OR HOLLOW BLOCK SUBSTRATE AT TOP & BOTTOM

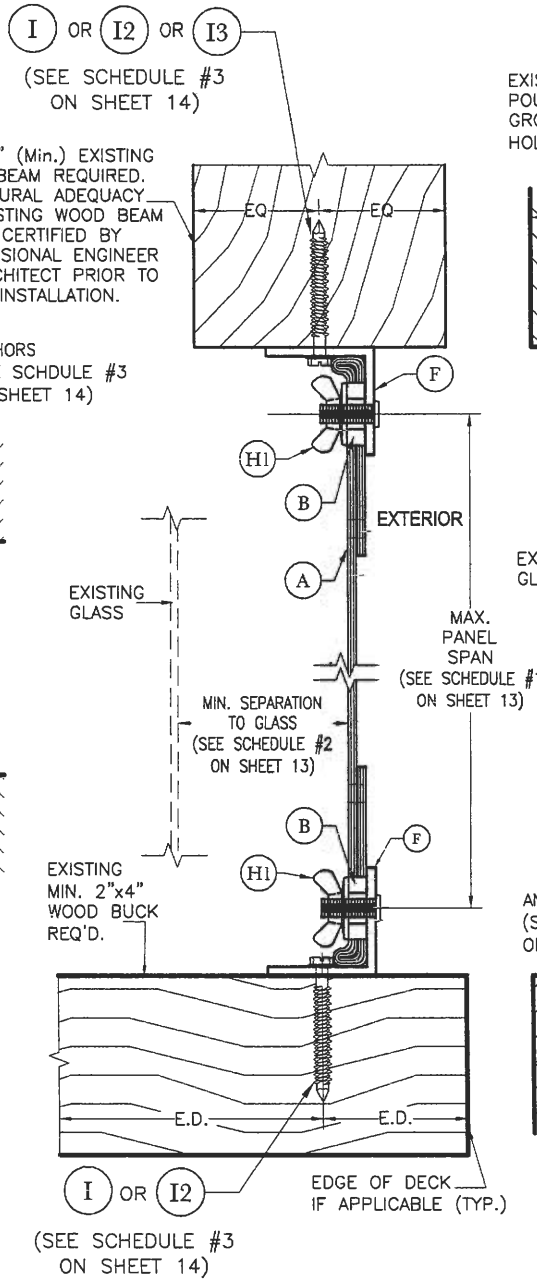

FOR REVERSED STUDDED ANGLE FLOOR TO CEILING MOUNT TO WOOD SUBSTRATE AT TOP & BOTTOM

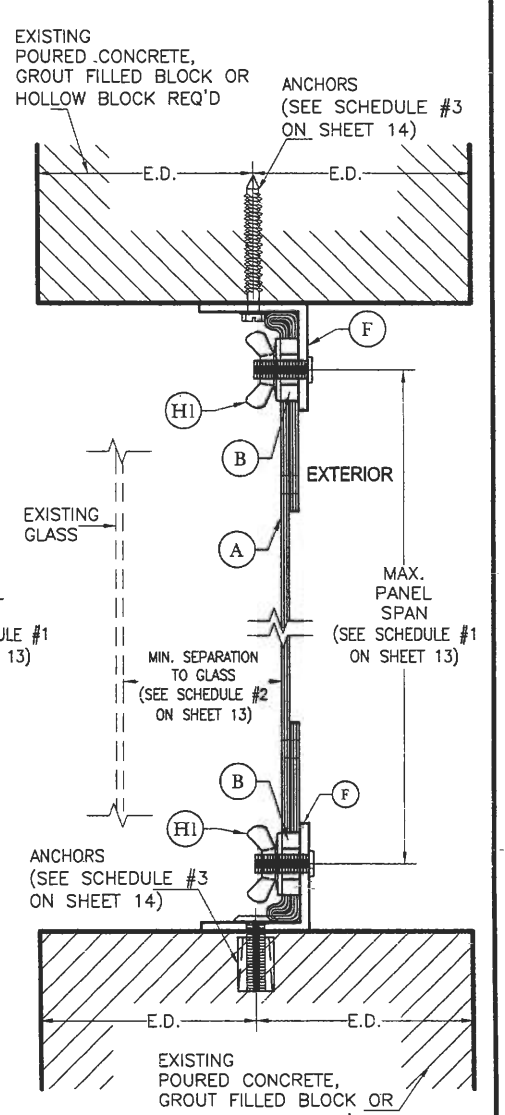

FOR REVERSED STUDDED ANGLE FLOOR TO CEILING MOUNT TO POURED CONCRETE, GROUT FILLED BLOCK OR HOLLOW BLOCK SUBSTRATE AT TOP & BOTTOM

SECTIONS F - F

SCALE 3/8"=1"

SECTIONS F' - F'

SCALE 3/8"=1"

SINGLE PANEL (REVERSED) ELEVATIONS

SCALE 1/2"= 1"

Δ FABRIC SHALL ENTIRELY COVER THE OPENING WIDTH WITH NO NEED OF OVERLAPPING BEYOND IT

NOTE FOR COMBINATION OF SECTIONS:

TOP AND BOTTOM MOUNTINGS CAN BE COMBINED IN ANY WAY TO SUIT ANY INSTALLATION.

STATE OF TEXAS
2/18/11

P.E. SEAL/SIGNATURE/DATE

TEXAS DEPARTMENT OF INSURANCE – 2006

WALTER A. TILLIT Jr. P.E.
PROFESSIONAL ENGINEER

6355 N.W. 36TH. ST., STE. 305
VIRGINIA GARDENS, FL 33166
PHONE : (305) 871-1530 , FAX : (305) 871-1531

TEXAS LIC. # 90691

GPP FABRIC SHUTTER - SERIES 2000

GLOBAL PROTECTION PRODUCTS, LLC.
DBA - ATRIUM WINDOWS AND DOORS
4800 S.W. 51 STREET
DAVIE, FL. 33314
PHONE: (954)689-7545, FAX: (954)689-8797

REV. No	DESCRIPTION	DATE	REV. No	DESCRIPTION	DATE
1	–	–	3	–	–
2	–	–	4	–	–

M.C.V.
DRAWN BY:

02/16/11
DATE

11-013
DRAWING No

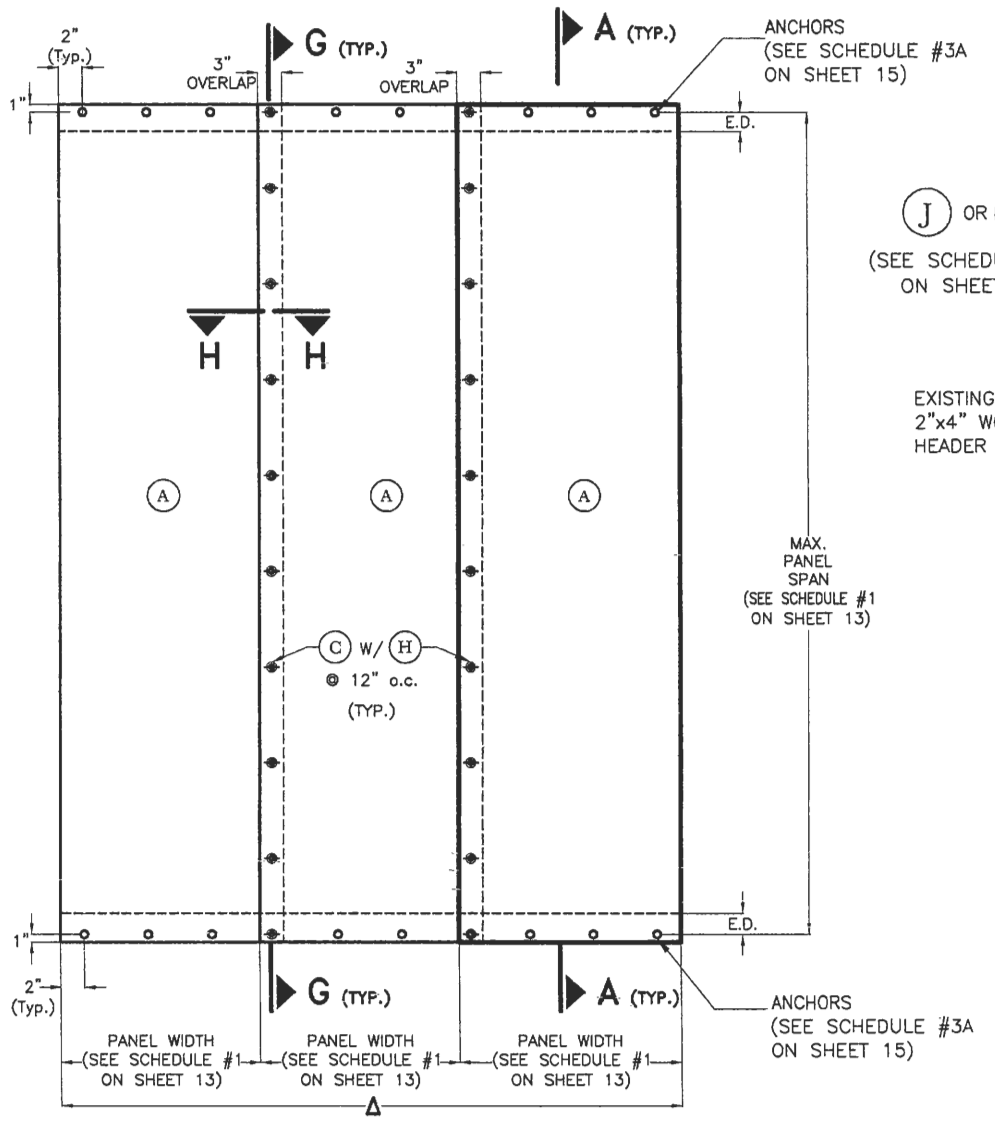

ELEVATION FOR DIRECT WALL MOUNT TO POURED CONCRETE, GROUT FILLED BLOCK, HOLLOW BLOCK OR WOOD SUBSTRATE AT TOP & BOTTOM

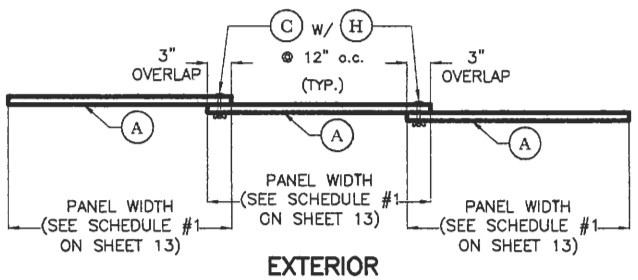

EXTERIOR

PLAN

OVERLAPPED MULTIPLE PANELS

SCALE 1/2"= 1'-0"

△ FABRIC SHALL ENTIRELY COVER THE OPENING WIDTH WITH NO NEED OF OVERLAPPING BEYOND IT

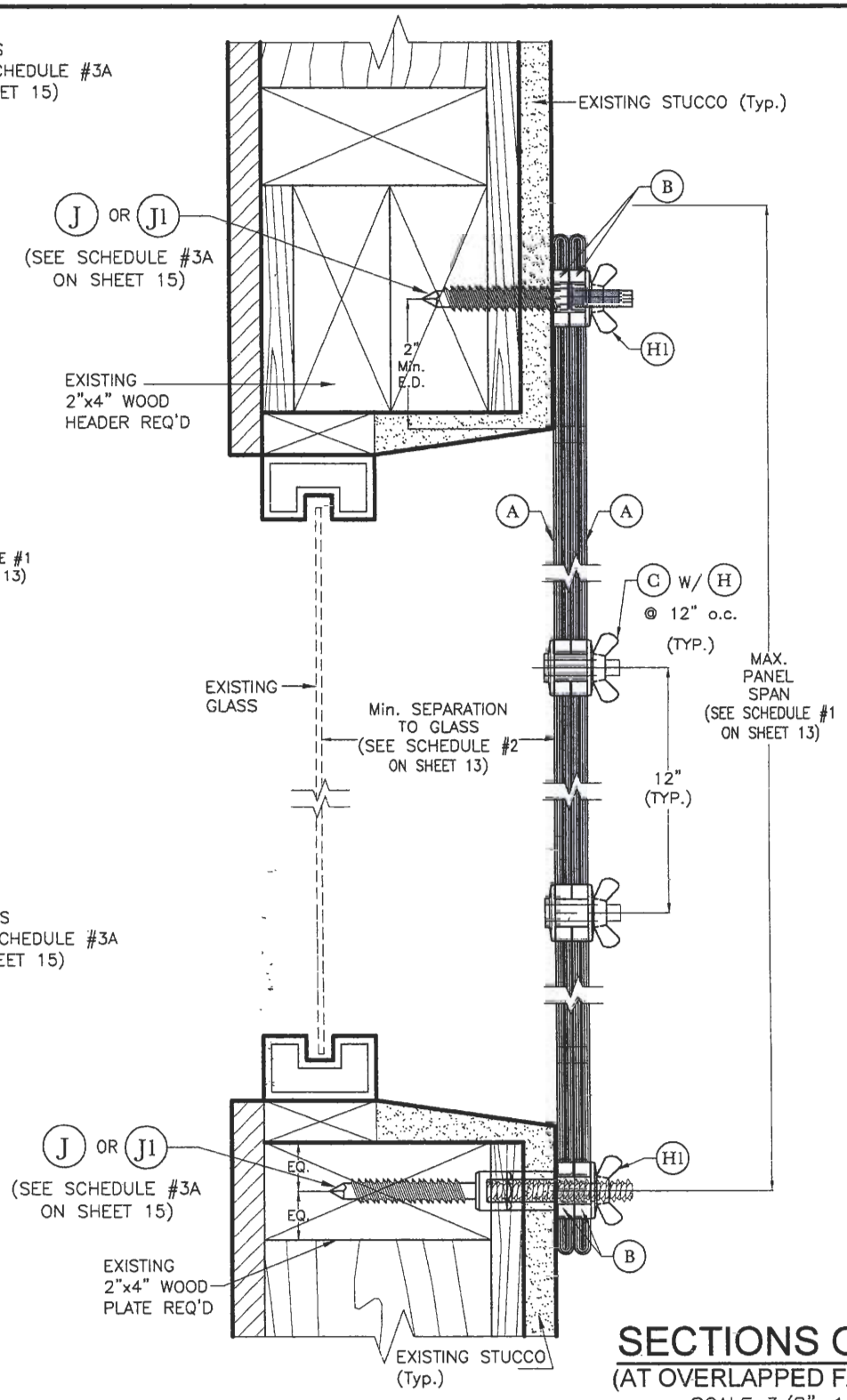

FOR DIRECT WALL MOUNT TO WOOD SUBSTRATE AT TOP & BOTTOM

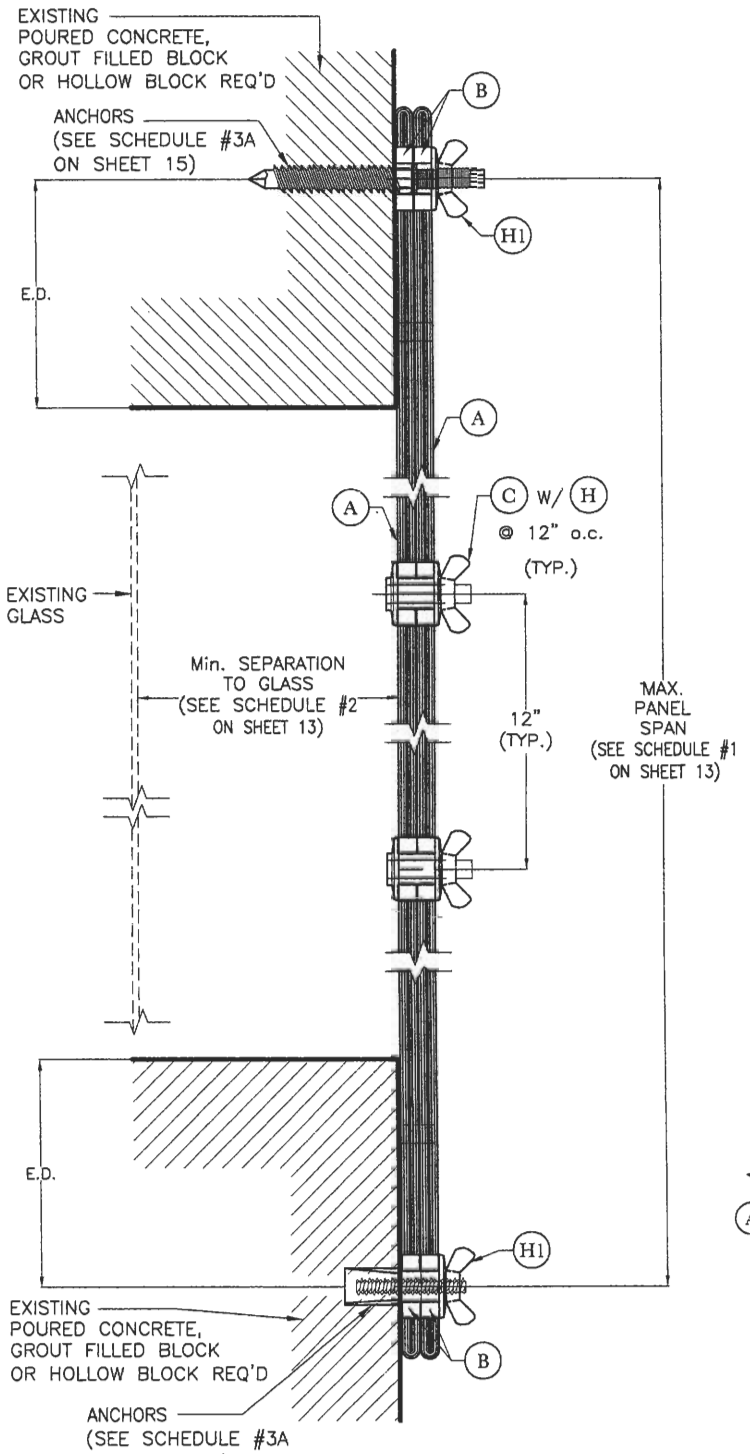

SECTIONS G - G

(AT OVERLAPPED FABRIC)

SCALE 3/8"=1"

FOR DIRECT WALL MOUNT TO POURED CONCRETE, GROUT FILLED BLOCK OR HOLLOW BLOCK SUBSTRATE AT TOP & BOTTOM

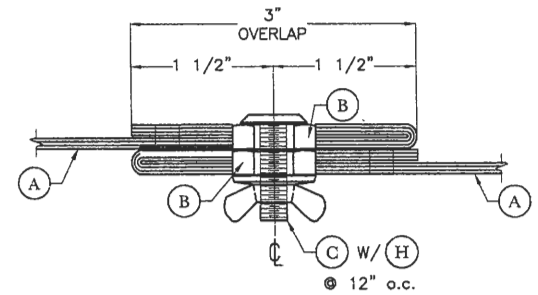

SECTION H - H

SCALE 3/8"=1"

NOTE FOR COMBINATION OF SECTIONS:

TOP AND BOTTOM MOUNTINGS CAN BE COMBINED IN ANY WAY TO SUIT ANY INSTALLATION.

STATE OF TEXAS

7/18/11

P.E. SEAL/SIGNATURE/DATE

TEXAS DEPARTMENT OF INSURANCE – 2006

WALTER A. TILLIT Jr. P.E.
PROFESSIONAL ENGINEER

6355 N.W. 36TH. ST., STE. 305
VIRGINIA GARDENS, FL. 33166
PHONE : (305) 871-1530 , FAX : (305) 871-1531

TEXAS LIC. # 90691

GPP FABRIC SHUTTER - SERIES 2000

GLOBAL PROTECTION PRODUCTS, LLC.
DBA - ATRIUM WINDOWS AND DOORS
4800 S.W. 51 STREET
DAVIE, FL. 33314
PHONE: (954)689-7545, FAX: (954)689-8797

REV. No	DESCRIPTION	DATE	REV. No	DESCRIPTION	DATE
1	–	–	3	–	–
2	–	–	4	–	–

M.C.V.
DRAWN BY:

02/16/11
DATE

11-013
DRAWING No

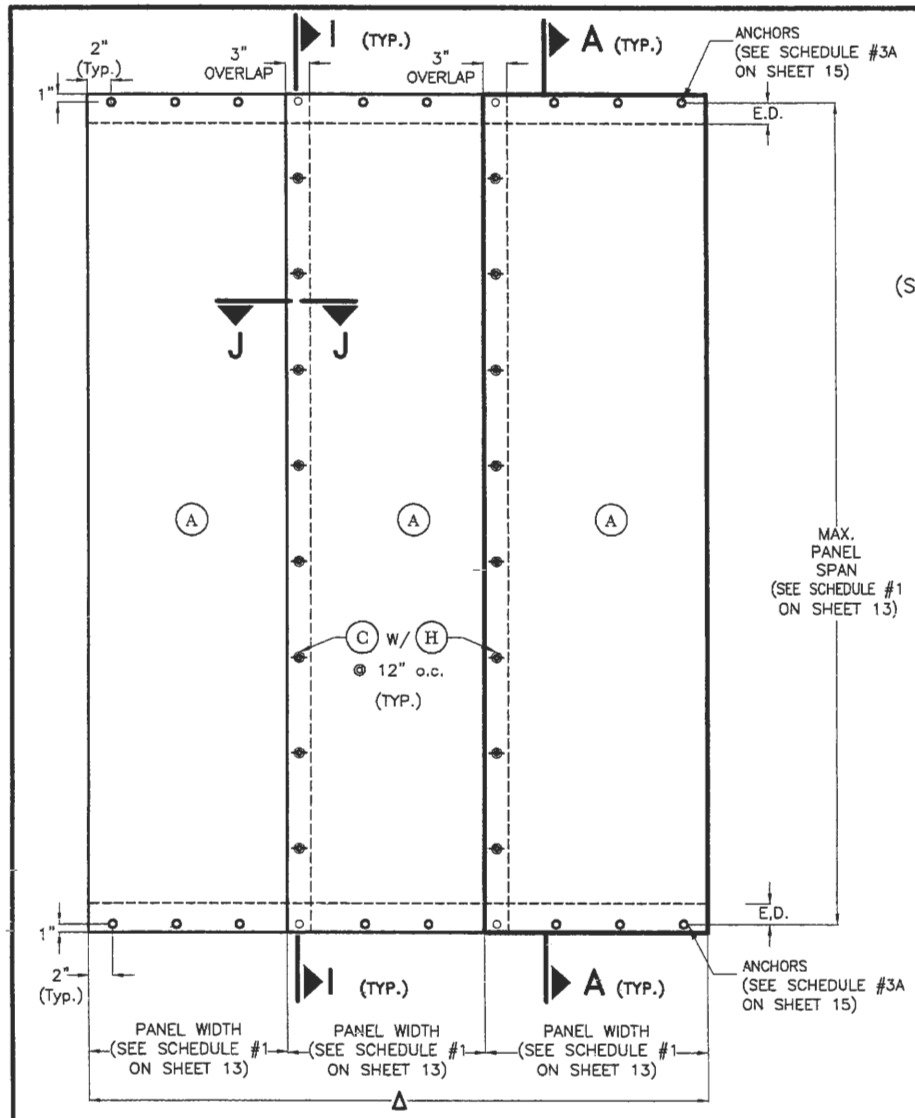

ELEVATION FOR DIRECT WALL MOUNT TO POURED CONCRETE, GROUT FILLED BLOCK, HOLLOW BLOCK OR WOOD SUBSTRATE AT TOP & BOTTOM

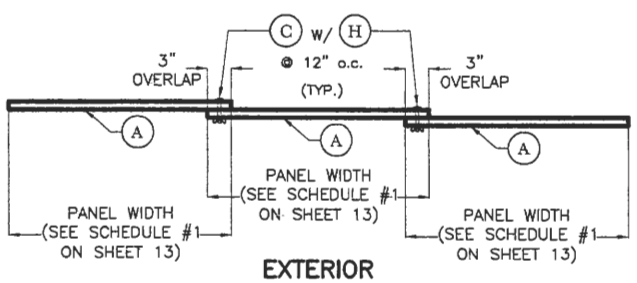

EXTERIOR

PLAN

SAFETY PANEL FOR DOORS W/ OVERLAPPED MULTIPLE PANELS

SCALE 1/2"= 1'-0"

Δ FABRIC SHALL ENTIRELY COVER THE OPENING WIDTH WITH NO NEED OF OVERLAPPING BEYOND IT

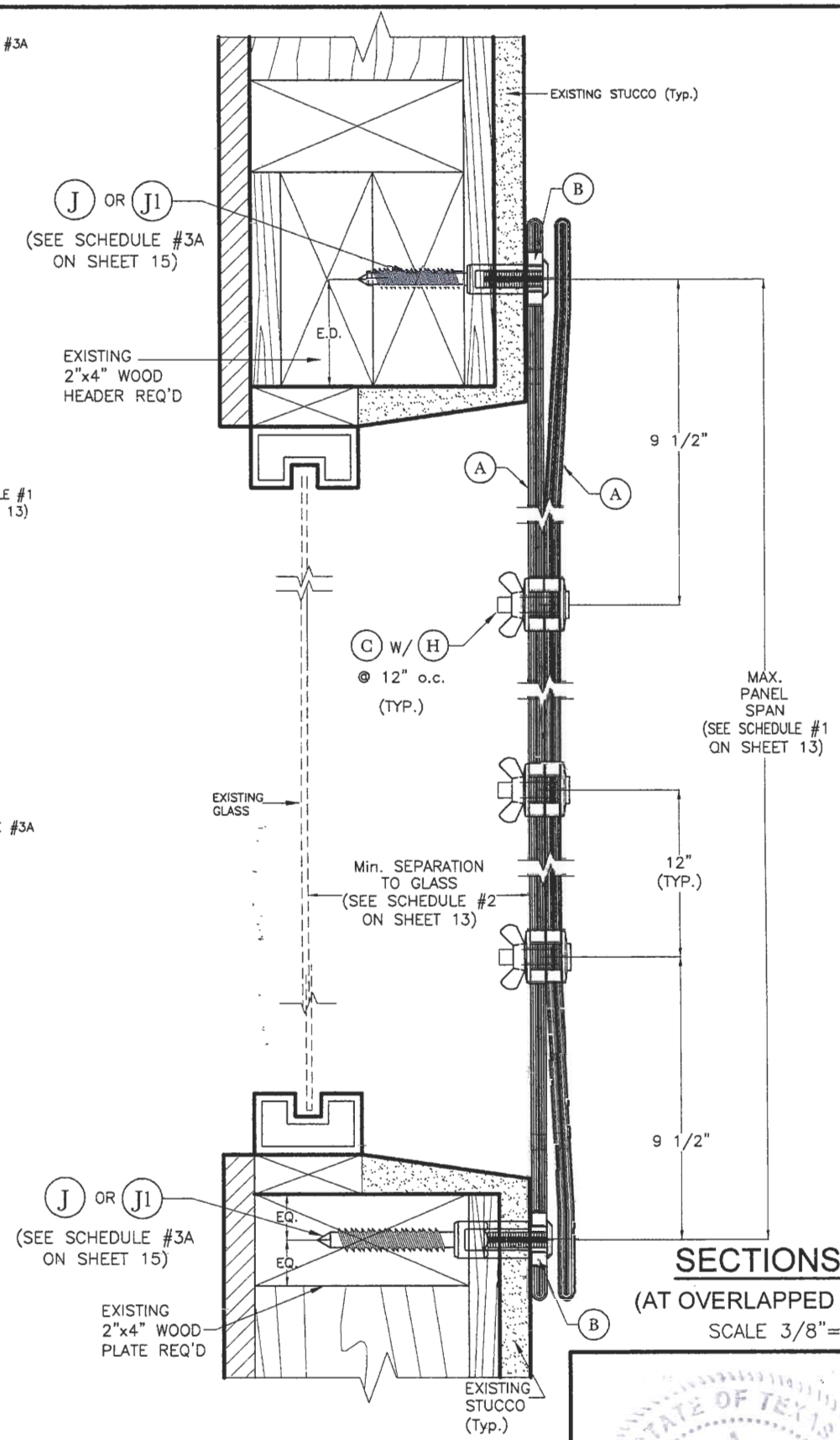

SECTIONS I - I

(AT OVERLAPPED FABRIC)

SCALE 3/8"=1"

FOR DIRECT WALL MOUNT TO WOOD SUBSTRATEAT TOP & BOTTOM

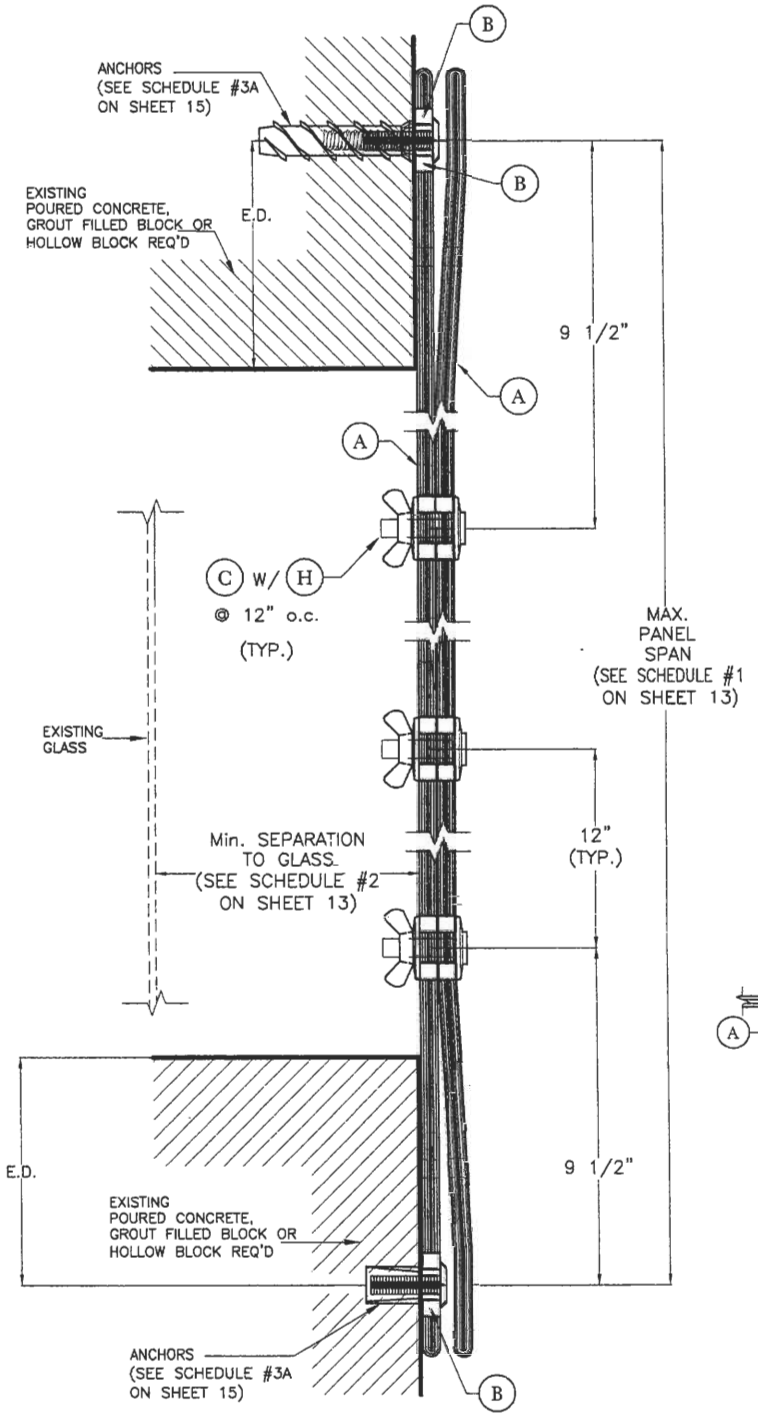

FOR DIRECT WALL MOUNT TO POURED CONCRETE, GROUT FILLED BLOCK OR HOLLOW BLOCK SUBSTRATE AT TOP & BOTTOM

INTERIOR

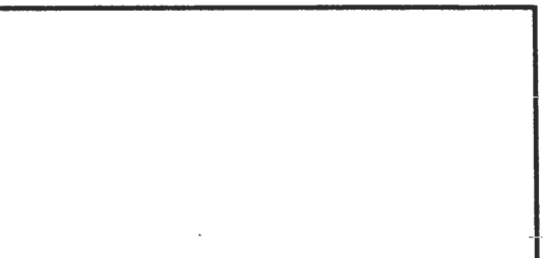

SECTION J - J

N.T.S.

NOTE FOR COMBINATION OF SECTIONS:

TOP AND BOTTOM MOUNTINGS CAN BE COMBINED IN ANY WAY TO SUIT ANY INSTALLATION.

STATE OF TEXAS — WALTER A. TILLIT JR. — LICENSED — PROFESSIONAL ENGINEER

2/18/11

P.E. SEAL/SIGNATURE/DATE

TEXAS DEPARTMENT OF INSURANCE – 2006

WALTER A. TILLIT Jr. P.E.
PROFESSIONAL ENGINEER

6355 N.W. 36TH. ST., STE. 305
VIRGINIA GARDENS, FL. 33166
PHONE : (305) 871-1530 , FAX : (305) 871-1531

TEXAS LIC. # 90691

GPP FABRIC SHUTTER - SERIES 2000

M.C.V. DRAWN BY:

GLOBAL PROTECTION PRODUCTS, LLC.
DBA - ATRIUM WINDOWS AND DOORS
4800 S.W. 51 STREET
DAVIE, FL. 33314
PHONE: (954)689-7545, FAX: (954)689-8797

02/16/11 DATE

11-013 DRAWING No

REV. No	DESCRIPTION	DATE	REV. No	DESCRIPTION	DATE
1	–	–	3	–	–
2	–	–	4	–	–

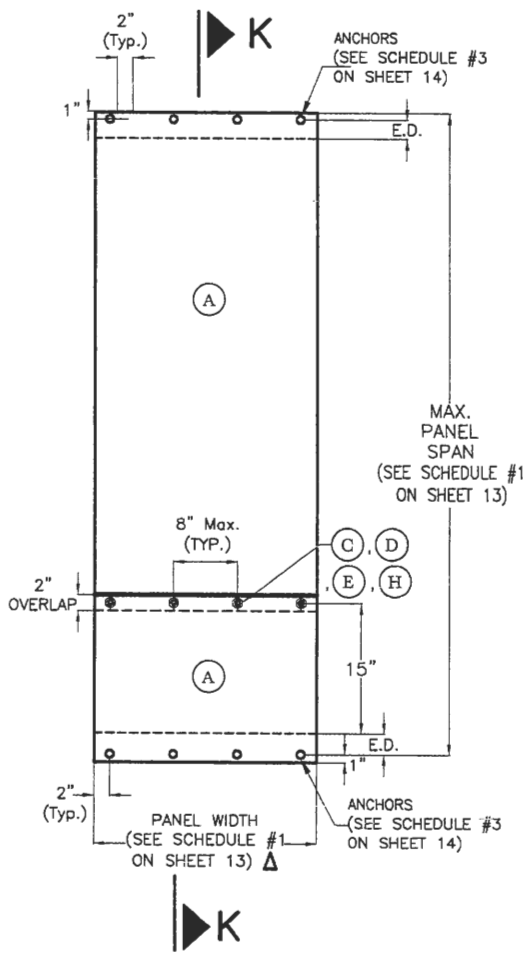

SAFETY SINGLE PANEL FOR SINGLE HUNG WINDOWS

SCALE 1/2"= 1'-0"

Δ FABRIC SHALL ENTIRELY COVER THE OPENING WIDTH WITH NO NEED OF OVERLAPPING BEYOND IT.

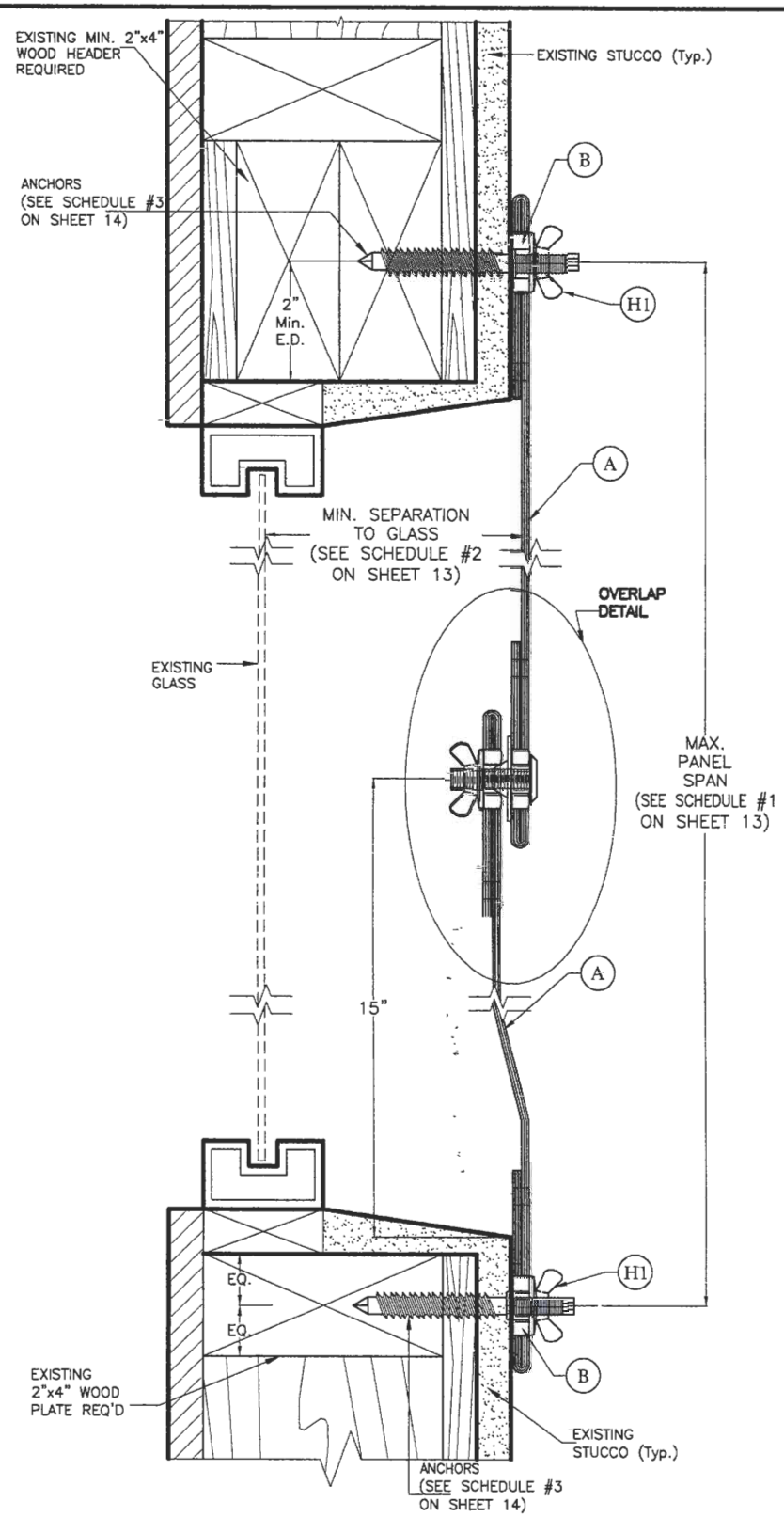

FOR DIRECT WALL MOUNT TO WOOD SUBSTRATE AT TOP & BOTTOM

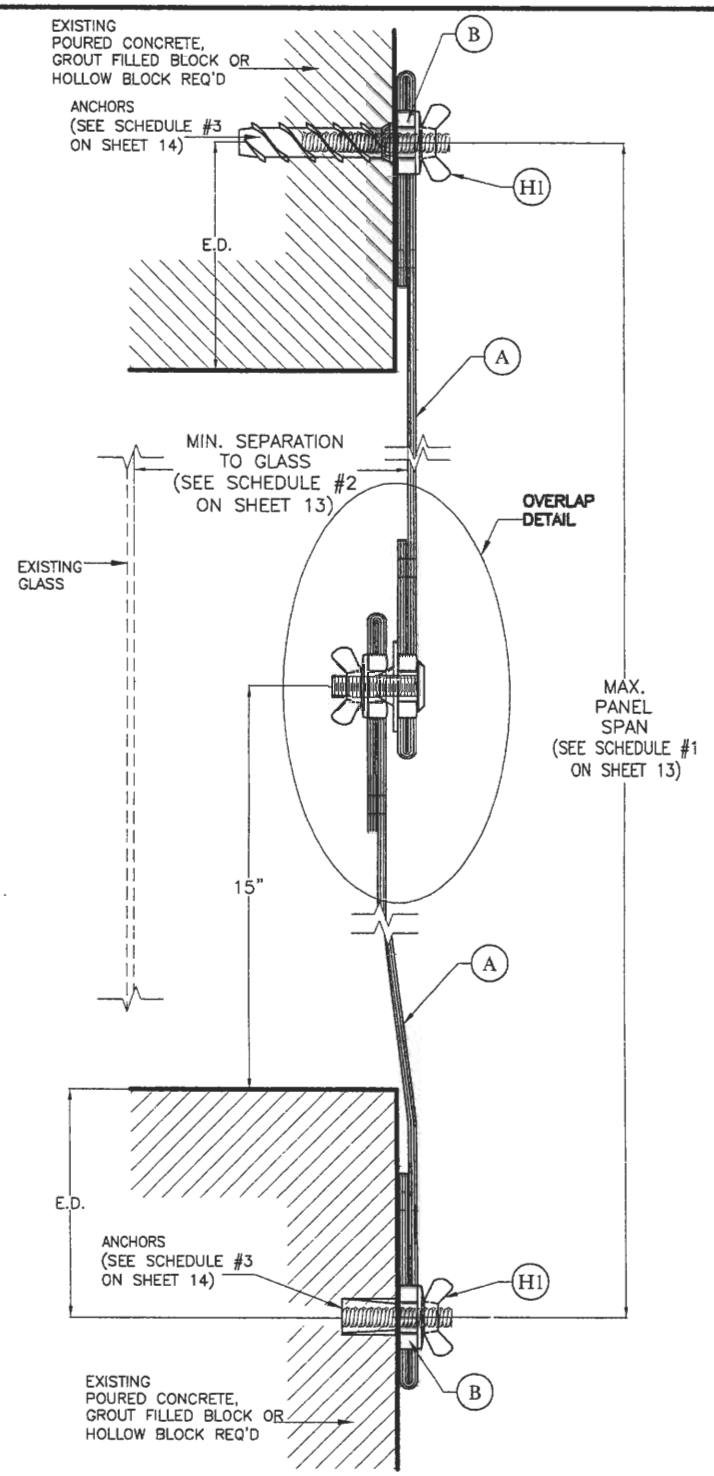

FOR DIRECT WALL MOUNT TO POURED CONCRETE, GROUT FILLED BLOCK OR HOLLOW BLOCK SUBSTRATE AT TOP & BOTTOM

SECTIONS K - K

SCALE 3/8"=1"

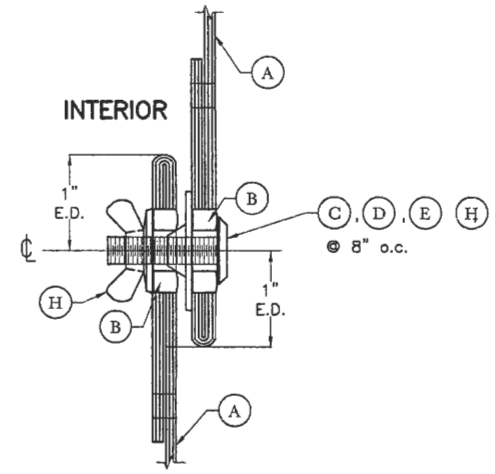

OVERLAP DETAIL

SCALE 3/8"=1"

NOTE FOR COMBINATION OF SECTIONS:

TOP AND BOTTOM MOUNTINGS CAN BE COMBINED IN ANY WAY TO SUIT ANY INSTALLATION.

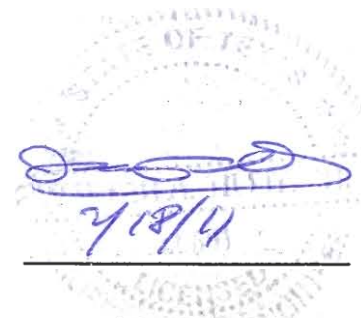

P.E. SEAL/SIGNATURE/DATE

TEXAS DEPARTMENT OF INSURANCE – 2006

WALTER A. TILLIT Jr. P.E.
PROFESSIONAL ENGINEER
6355 N.W. 36TH. ST., STE. 305
VIRGINIA GARDENS, FL. 33166
PHONE : (305) 871-1530 , FAX : (305) 871-1531
TEXAS LIC. # 90691

GPP FABRIC SHUTTER – SERIES 2000

M.C.V. DRAWN BY:

GLOBAL PROTECTION PRODUCTS, LLC.
DBA – ATRIUM WINDOWS AND DOORS
4800 S.W. 51 STREET
DAVIE, FL. 33314
PHONE: (954)689-7545, FAX: (954)689-8797

02/16/11 DATE

11-013 DRAWING No

REV. No	DESCRIPTION	DATE	REV. No	DESCRIPTION	DATE
1	–	–	3	–	–
2	–	–	4	–	–

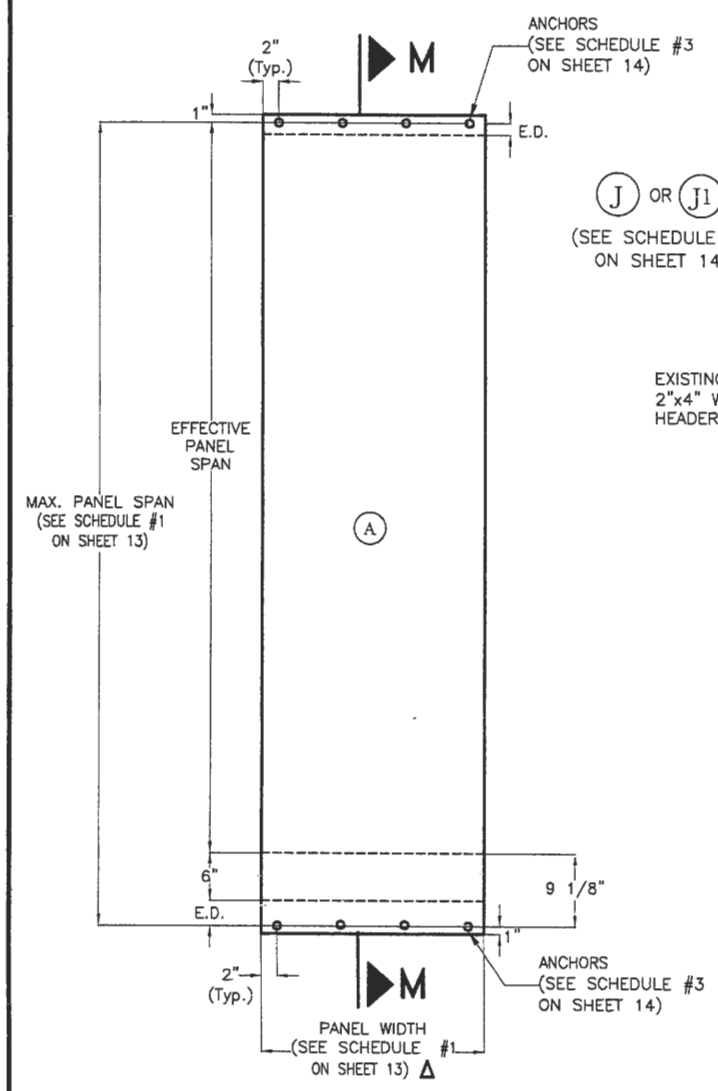

ELEVATION FOR DIRECT WALL MOUNT TO POURED CONCRETE, GROUT FILLED BLOCK OR HOLLOW BLOCK & WOOD SUBSTRATE AT TOP & BOTTOM

OFFSET TOP VS BOTTOM SINGLE PANEL

SCALE 1/2"= 1'-0"

Δ FABRIC SHALL ENTIRELY COVER THE OPENING WIDTH WITH NO NEED OF OVERLAPPING BEYOND IT.

NOTE FOR COMBINATION OF SECTIONS:

TOP AND BOTTOM MOUNTINGS CAN BE COMBINED IN ANY WAY TO SUIT ANY INSTALLATION.

SECTIONS M - M

SCALE 3/8"=1"

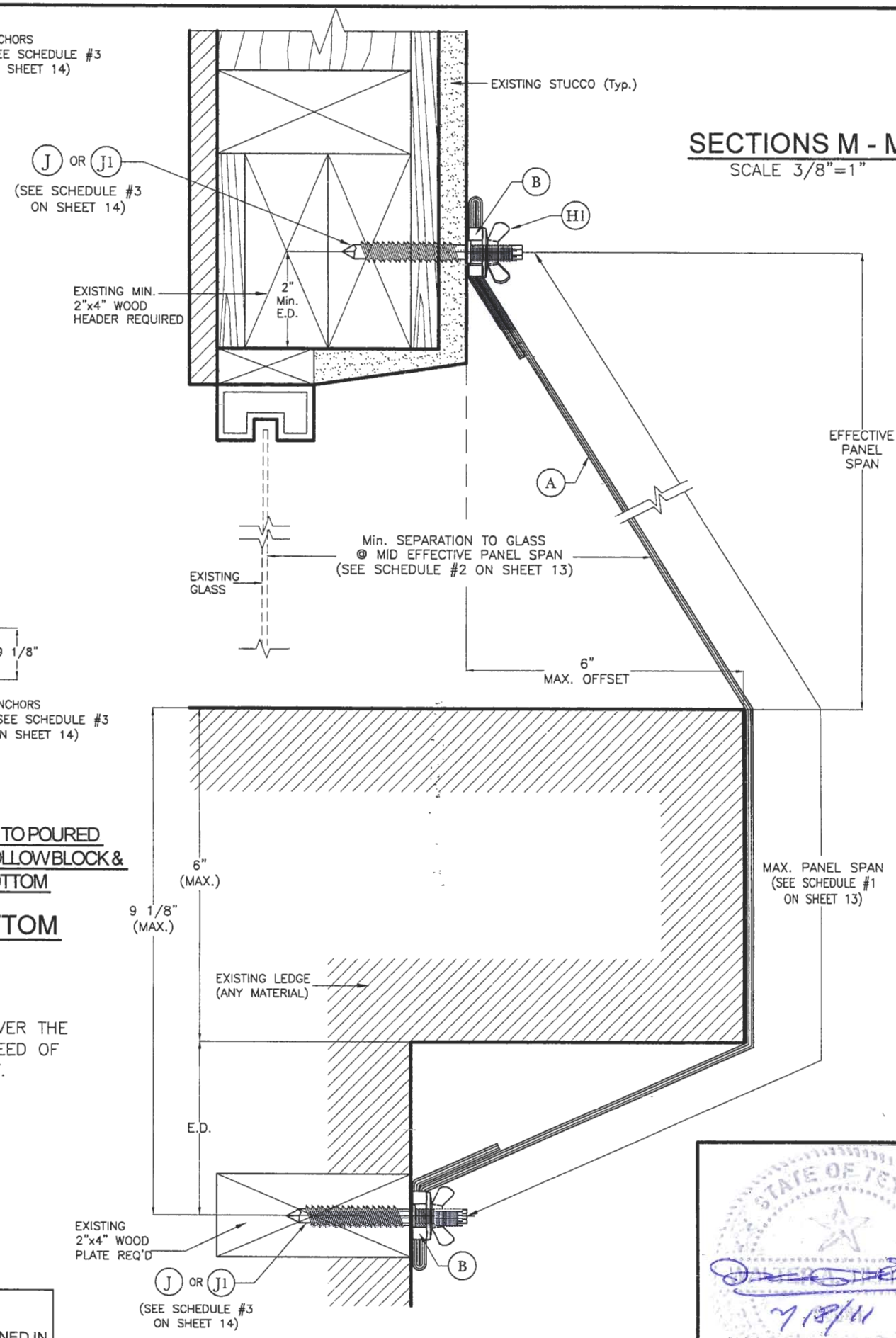

ELEVATION FOR DIRECT WALL MOUNT TO WOOD SUBSTRATE AT TOP & BOTTOM

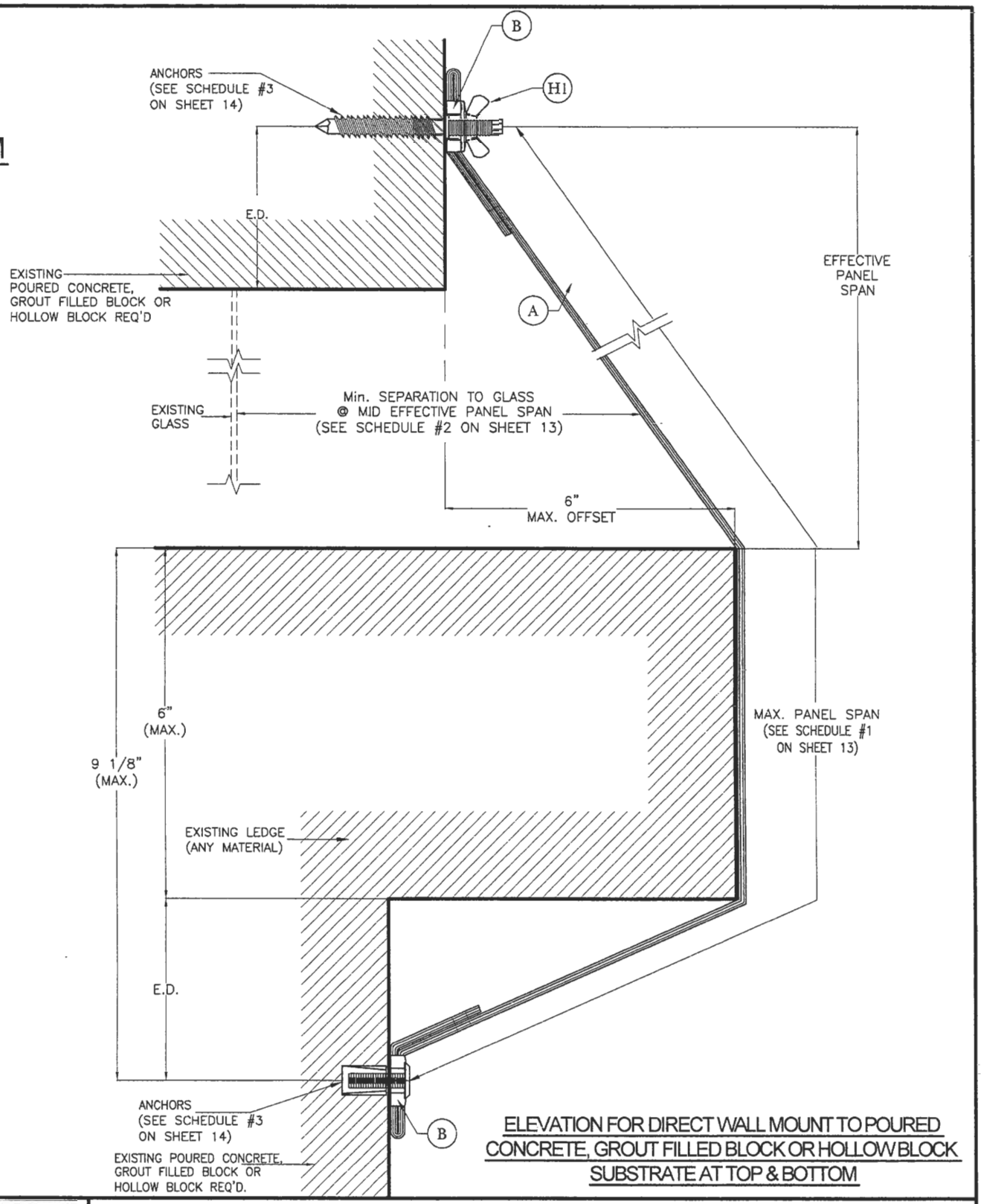

ELEVATION FOR DIRECT WALL MOUNT TO POURED CONCRETE, GROUT FILLED BLOCK OR HOLLOW BLOCK SUBSTRATE AT TOP & BOTTOM

STATE OF TEXAS

7/18/11

P.E. SEAL/SIGNATURE/DATE

TEXAS DEPARTMENT OF INSURANCE – 2006

WALTER A. TILLIT Jr. P.E.
PROFESSIONAL ENGINEER

6355 N.W. 36TH. ST., STE. 305
VIRGINIA GARDENS, FL. 33166
PHONE : (305) 871-1530 , FAX : (305) 871-1531

TEXAS LIC. # 90691

GPP FABRIC SHUTTER - SERIES 2000

GLOBAL PROTECTION PRODUCTS, LLC.
DBA - ATRIUM WINDOWS AND DOORS
4800 S.W. 51 STREET
DAVIE, FL. 33314
PHONE: (954)689-7545, FAX: (954)689-8797

REV. No	DESCRIPTION	DATE	REV. No	DESCRIPTION	DATE
1	-	-	3	-	-
2	-	-	4	-	-

M.C.V. DRAWN BY:

02/16/11 DATE

11-013 DRAWING No

SCHEDULE # 1

MAXIMUM DESIGN PRESSURE RATING, CORRESPONDING MAXIMUM PANEL SPAN & MAXIMUM & MINIMUM PANEL WIDTH

MAXIMUM PRESSURE RATING (p.s.f.)	MAXIMUM PANEL SPAN (ft.)	FOR SINGLE PANELS			FOR OVERLAPPED MULTIPLE PANELS			IMPACT RESISTANCE MISSILE TYPE & SPEED *
		MAXIMUM & MINIMUM PANEL WIDTH (ft.)		APPLICABLE TO SECTIONS & ANY COMBINATION OF THEM	MAXIMUM & MINIMUM PANEL WIDTH (ft.)		APPLICABLE TO SECTIONS & ANY COMBINATION OF THEM	
		MAX.	MIN.		MAX.	MIN.		
60.00 OR LESS	12 ' - 7 "	12' - 0" †	2' - 4"	A - A, A' - A' , B - B, D - D, E - E & F - F	12' - 0" †	2' - 4"	G - G	TYPE D 50 ft/sec.
75.00 OR LESS	8 ' - 7 "	12' - 0" †	1' - 0"	A - A, A' - A', B - B, D - D, E - E, F - F & M - M	12' - 0" †	2' - 4"	G - G & I - I	
75.00 OR LESS	6 ' - 7 "	12' - 0" †	2' - 4"	K - K	-	-	-	

† USE MAXIMUM PANEL WIDTH OF 6'-6" FOR INSTALLATIONS WITHIN WIND ZONE 4, AS DEFINED BY SECTION 6.2.2.4 OF ASTM E 1996 STANDARD.

* PER ASTM E 1996 STANDARD.

SCHEDULE # 2

MINIMUM SEPARATION TO GLASS FOR SINGLE & OVERLAPPED MULTIPLE PANEL

MAXIMUM PRESSURE RATING (p.s.f.)	MAXIMUM PANEL SPAN (ft.)	REQUIRED MIN. SEPARATION TO GLASS MEASURED TO BACK OF FABRIC (in)	
		WIND ZONES 1 THRU 3 *	WIND ZONE 4 *
60.0 OR LESS	12 ' - 7 "	1" Δ	34 1/2 "
75.0 OR LESS	8 ' - 7 "	1" Δ	28 5/8 "
75.0 OR LESS	6 ' - 7 "	1" Δ	15 3/8 "

Δ MINIMUM SEPARATION TO GLASS MAY BE REDUCED TO 1/4" ONLY FOR INSTALLATION W/ 8'-0" PANEL SPAN AND FOR INSTALLATION INTO WOOD FRAME BUILDING.

STATE OF TEXAS

2/18/11

P.E. SEAL/SIGNATURE/DATE

TEXAS DEPARTMENT OF INSURANCE – 2006

WALTER A. TILLIT Jr. P.E.
PROFESSIONAL ENGINEER

6355 N.W. 36TH. ST., STE. 305
VIRGINIA GARDENS, FL. 33166
PHONE : (305) 871-1530 , FAX : (305) 871-1531

TEXAS LIC. # 90691

GPP FABRIC SHUTTER - SERIES 2000

M.C.V.
DRAWN BY:

GLOBAL PROTECTION PRODUCTS, LLC.
DBA - ATRIUM WINDOWS AND DOORS
4800 S.W. 51 STREET
DAVIE, FL. 33314
PHONE: (954)689-7545, FAX: (954)689-8797

02/16/11
DATE

11-013
DRAWING No

REV. No	DESCRIPTION	DATE	REV. No	DESCRIPTION	DATE
1	-	-	3	-	-
2	-	-	4	-	-

SCHEDULE # 3

MAXIMUM DESIGN PRESSURE RATING (p.s.f.) AND CORRESPONDING MAXIMUM ANCHOR SP ACING FOR SINGLE PANELS

DIRECT MOUNT OR WALL MOUNT W/ STUDDED ANGLE

MAXIMUM DESIGN PRESSURE (p.s.f.)	I 1/4"ø ELCO ULTRACON ANCHOR				I1 5/16"ø ITW BUILDEX TAPCON XL ANCHOR			I2 5/16"ø ELCO ULTRACON ANCHOR	I3 5/16"ø ELCO ULTRACON ANCHOR	MAXIMUM PANEL SPAN (ft.)	APPLICABLE TO SECTIONS & ANY COMBINATION OF THEM
	TO CONCRETE	TO GROUT FILLED BLOCK	TO HOLLOW BLOCK	TO WOOD	TO CONCRETE	TO GROUT FILLED BLOCK	TO HOLLOW BLOCK	TO WOOD	TO WOOD		
	W/ MIN. REQ'D. f'c = 2700 p.s.i. 1 3/4" embedment 3 1/8" E.D.	W/ MIN. REQ'D. f'm = 1924 p.s.i. 1 1/4" embedment 2 1/2" E.D.	W/ MIN. REQ'D. f'm = 1924 p.s.i. 1 1/4" embedment 2 1/2" E.D.	W/ MIN. REQ'D. G = 0.55 1" Thread. Penet. 2" E.D.	W/ MIN. REQ'D. f'c = 2899 p.s.i. 2 1/4" embedment 3 1/8" E.D.	W/ MIN. REQ'D. f'm = 1872 p.s.i. 2 1/4" embedment 4" E.D.	W/ MIN. REQ'D. f'm = 1872 p.s.i. 1 1/4" embedment 4" E.D.	W/ MIN. REQ'D. G = 0.55 1" Thread. Penet. 3 1/8" E.D.	W/ MIN. REQ'D. G = 0.55 2" Thread. Penet. 3 1/8" E.D.		
30.00 OR LESS	7 "	5 1/2 "	4 1/2 "	2 1/2 "	8 "	8 "	7 "	5 "	8 "	12 ' - 7 "	B - B, D - D (TOP) & F - F
30.00 - 45.00	5 "	4 "	N/A	2 "	8 "	8 "	5 "	3 1/2 "	7 1/2 "		
45.00 - 60.00	4 "	N/A	N/A	1 1/2 "	7 1/2 "	7 1/2 "	4 "	3 "	6 "		
37.50 OR LESS	7 "	5 "	4 1/2 "	2 1/2 "	8 "	8 "	7 "	4 1/2 "	8 "	8 ' - 7 "	B - B & M - M
37.50 - 56.25	5 "	N/A	N/A	2 "	8 "	8 "	5 "	3 1/2 "	7 "		
56.25 - 75.00	4 "	N/A	N/A	1 1/2 "	7 1/2 "	7 1/2 "	4 "	3 "	5 1/2 "		
37.50 OR LESS	8 "	8 "	8 "	5 1/2 "	8 "	8 "	8 "	8 "	8 "	6 ' - 7 "	B - B, D - D (TOP), F - F, M - M & K - K
37.50 - 56.25	8 "	8 "	6 "	4 "	8 "	8 "	8 "	7 "	8 "		
56.25 - 75.00	7 1/2 "	6 "	4 1/2 "	3 "	8 "	8 "	6 1/2 "	5 1/2 "	8 "		

MAXIMUM DESIGN PRESSURE (p.s.f.)	J 1/4"ø ELCO PANELMATE PRO			J1 1/4"ø ELCO FEMALE ID PANELMATE			K 1/4"ø ALL POINT SOLID-SET		K1 1/2"ø ELCO PANELMATE "L" INSERT			MAXIMUM PANEL SPAN (ft.)	APPLICABLE TO SECTIONS & ANY COMBINATION OF THEM
	TO CONCRETE	TO HOLLOW BLOCK OR GROUT FILLED BLOCK	TO WOOD	TO CONCRETE	TO HOLLOW BLOCK OR GROUT FILLED BLOCK	TO WOOD	TO CONCRETE	TO HOLLOW BLOCK	TO CONCRETE	TO GROUT FILLED BLOCK	TO HOLLOW BLOCK		
	W/ MIN. REQ'D. f'c = 3350 p.s.i. 2" embedment 2 1/2" E.D.	W/ MIN. REQ'D. f'm = 2071 p.s.i. 1 1/4" embedment 3" E.D.	W/ MIN. REQ'D. G = 0.55 1 7/8" Thread. Penet. 3/4" E.D.	W/ MIN. REQ'D. f'c = 3350 p.s.i. 1 3/4" embedment 2 1/2" E.D.	W/ MIN. REQ'D. f'm = 2071 p.s.i. 1 1/4" embedment 3" E.D.	W/ MIN. REQ'D. G = 0.55 1 7/8" Thread. Penet. 3/4" E.D.	W/ MIN. REQ'D. f'c = 3000 p.s.i. 7/8" embedment 3" E.D.	W/ MIN. REQ'D. f'm = 1800 p.s.i. 7/8" embedment 3" E.D.	W/ MIN. REQ'D. f'c = 2071 p.s.i. 1 5/8" embedment 4" E.D.	W/ MIN. REQ'D. f'm = 2676 p.s.i. 1 1/4" embedment 3 1/2" E.D.	W/ MIN. REQ'D. f'm = 1794 p.s.i. 1 1/4" embedment 3 1/2" E.D.		
30.00 OR LESS	8 "	5 "	7 "	7 "	N/A	7 "	8 "	6 1/2 "	8 "	8 "	8 "	12 ' - 7 "	A - A, B - B, D - D (TOP) & F - F
30.00 - 45.00	6 1/2 "	N/A	5 "	5 "	N/A	5 "	6 1/2 "	4 1/2 "	7 "	6 "	5 1/2 "		
45.00 - 60.00	5 "	N/A	4 "	N/A	N/A	4 "	5 "	3 1/2 "	5 1/2 "	4 1/2 "	4 1/2 "		
37.50 OR LESS	8 "	4 1/2 "	6 1/2 "	6 1/2 "	N/A	6 1/2 "	8 "	6 "	8 "	8 "	8 "	8 ' - 7 "	A - A, B - B, & M - M
37.50 - 56.25	6 1/2 "	N/A	5 "	4 1/2 "	N/A	5 "	6 "	4 1/2 "	7 "	5 1/2 "	5 1/2 "		
56.25 - 75.00	5 "	N/A	4 "	N/A "	N/A	4 "	5 "	3 1/2 "	5 1/2 "	4 1/2 "	4 1/2 "		
37.50 OR LESS	8 "	8 "	8 "	8 "	7 1/2 "	8 "	8 "	8 "	8 "	8 "	8 "	6 ' - 7 "	A - A, B - B, D - D (TOP), F - F, M - M & K - K
37.50 - 56.25	8 "	6 1/2 "	8 "	8 "	5 1/2 "	8 "	8 "	8 "	8 "	8 "	8 "		
56.25 - 75.00	8 "	5 "	8 "	7 1/2 "	4 "	8 "	8 "	6 1/2 "	8 "	8 "	8 "		

MAXIMUM DESIGN PRESSURE (p.s.f.)	O 3/8"ø ELCO MODIFIED CONFLEX			M 5/16"ø ELCO HANGERMATE		M1 1/4"ø ELCO HANGERMATE	N 1/4"ø ELCO FAB-LOCK HD	P 1/2"ø POWER CALK-IN ANCHOR		MAXIMUM PANEL SPAN (ft.)	APPLICABLE TO SECTIONS & ANY COMBINATION OF THEM
	TO CONCRETE	TO GROUT FILLED BLOCK	TO HOLLOW BLOCK	TO CONCRETE	TO HOLLOW BLOCK	TO A36 STEEL	TO 18 GAGE STEEL	TO CONCRETE	TO HOLLOW BLOCK		
	W/ MIN. REQ'D. f'c = 1819 p.s.i. 2 1/2" embedment 3 3/4" E.D.	W/ MIN. REQ'D. f'm = 2400 p.s.i. 1 3/4" embedment 2 1/2" E.D.	W/ MIN. REQ'D. f'm = 2400 p.s.i. 1 1/4" embedment 2 1/2" E.D.	W/ MIN. REQ'D. f'c = 3650 p.s.i. 2" embedment 3 1/8" E.D.	W/ MIN. REQ'D. f'm = 1872 p.s.i. 1 1/4" embedment 3 1/8" E.D.	W/ MIN. REQ'D. 1/8" thk. (A36) 1/8" Threaded 1 3/4" E.D.	W/ MIN. REQ'D. 30 k.s.i. 1/8" Threaded 1 3/4" E.D.	W/ MIN. REQ'D. f'c = 3000 p.s.i. 1 1/2" embedment 6" E.D.	W/ MIN. REQ'D. f'm = 1500 p.s.i. 1 1/2" embedment 6" E.D.		
30.00 OR LESS	8 "	6 1/2 "	5 "	8 "	5 1/2 "	8 "	8 "	8 "	8 "	12 ' - 7 "	A - A, A' - A', B - B, D - D (TOP), E - E & F - F
30.00 - 45.00	8 "	4 1/2 "	3 1/2 "	8 "	N/A	8 "	8 "	8 "	6 1/2 "		
45.00 - 60.00	8 "	4 "	2 1/2 "	6 1/2 "	N/A	7 "	7 "	8 "	5 "		
37.50 OR LESS	8 "	6 "	5 "	8 "	5 "	8 "	8 "	8 "	8 "	8 ' - 7 "	A - A, B - B, & M - M
37.50 - 56.25	8 "	4 1/2 "	3 1/2 "	8 "	N/A	8 "	8 "	8 "	6 1/2 "		
56.25 - 75.00	8 "	3 1/2 "	3 "	6 1/2 "	N/A	7 "	7 "	8 "	5 "		
37.50 OR LESS	8 "	8 "	8 "	8 "	8 "	8 "	8 "	8 "	8 "	6 ' - 7 "	A - A, A' - A', B - B, D - D (TOP), E - E, F - F, M - M & K - K
37.50 - 56.25	8 "	8 "	6 "	8 "	7 "	8 "	8 "	8 "	8 "		
56.25 - 75.00	8 "	7 "	4 1/2 "	8 "	5 1/2 "	8 "	8 "	8 "	8 "		

FLOOR/CEILING MOUNT W/ STUDDED ANGLE

MAXIMUM DESIGN PRESSURE (p.s.f.)	I 1/4"ø ELCO ULTRACON ANCHOR				I1 5/16"ø ITW BUILDEX TAPCON XL ANCHOR			MAXIMUM PANEL SPAN (ft.)	APPLICABLE TO SECTIONS & ANY COMBINATION OF THEM
	TO CONCRETE	TO GROUT FILLED BLOCK	TO HOLLOW BLOCK	TO WOOD	TO CONCRETE	TO GROUT FILLED BLOCK	TO HOLLOW BLOCK		
	W/ MIN. REQ'D. f'c = 2700 p.s.i. 1 3/4" embedment 3 1/8" E.D.	W/ MIN. REQ'D. f'm = 1924 p.s.i. 1 1/4" embedment 2 1/2" E.D.	W/ MIN. REQ'D. f'm = 1924 p.s.i. 1 1/4" embedment 2 1/2" E.D.	W/ MIN. REQ'D. G = 0.55 1" Thread. Penet. 2" E.D.	W/ MIN. REQ'D. f'c = 2899 p.s.i. 2 1/4" embedment 3 1/8" E.D.	W/ MIN. REQ'D. f'm = 1872 p.s.i. 2 1/4" embedment 4" E.D.	W/ MIN. REQ'D. f'm = 1872 p.s.i. 1 1/4" embedment 4" E.D.		
30.00 OR LESS	7 1/2 "	7 "	N/A	4 "	8 "	8 "	5 "	12 ' - 7 "	C - C, D - D (BOTTOM) & F ' - F '
30.00 - 45.00	5 1/2 "	5 "	N/A	3 "	8 "	8 "	N/A		
45.00 - 60.00	4 "	N/A	N/A	2 1/2 "	7 1/2 "	8 "	N/A		

MAXIMUM DESIGN PRESSURE (p.s.f.)	I2 5/16"ø ELCO ULTRACON ANCHOR	I3 5/16"ø ELCO ULTRACON ANCHOR	MAXIMUM PANEL SPAN (ft.)	APPLICABLE TO SECTIONS & ANY COMBINATION OF THEM
	TO WOOD	TO WOOD		
	W/ MIN. REQ'D. G = 0.55 1" Thread. Penet. 3 1/8" E.D.	W/ MIN. REQ'D. G = 0.55 2" Thread. Penet. 3 1/8" E.D.		
30.00 OR LESS	5 1/2 "	8 "	12 ' - 7 "	C - C, D - D (BOTTOM) & F ' - F '
30.00 - 45.00	4 "	8 "		
45.00 - 60.00	3 "	6 1/2 "		

MAXIMUM DESIGN PRESSURE (p.s.f.)	K 1/4"ø ALL POINT SOLID-SET		K1 1/2"ø ELCO PANELMATE "L" INSERT			P 1/2"ø POWER CALK-IN ANCHOR		MAXIMUM PANEL SPAN (ft.)	APPLICABLE TO SECTIONS & ANY COMBINATION OF THEM
	TO CONCRETE	TO HOLLOW BLOCK	TO CONCRETE	TO GROUT FILLED BLOCK	TO HOLLOW BLOCK	TO CONCRETE	TO HOLLOW BLOCK		
	W/ MIN. REQ'D. f'c = 3000 p.s.i. 7/8" embedment 3" E.D.	W/ MIN. REQ'D. f'm = 1800 p.s.i. 7/8" embedment 3" E.D.	W/ MIN. REQ'D. f'c = 2071 p.s.i. 1 5/8" embedment 4" E.D.	W/ MIN. REQ'D. f'm = 2676 p.s.i. 1 1/4" embedment 3 1/2" E.D.	W/ MIN. REQ'D. f'm = 1794 p.s.i. 1 1/4" embedment 3 1/2" E.D.	W/ MIN. REQ'D. f'c = 3000 p.s.i. 1 1/2" embedment 6" E.D.	W/ MIN. REQ'D. f'm = 1500 p.s.i. 1 1/2" embedment 6" E.D.		
30.00 OR LESS	8 "	6 1/2 "	8 "	7 "	7 "	8 "	8 "	12 ' - 7 "	C - C, D - D (BOTTOM) & F ' - F '
30.00 - 45.00	6 1/2 "	4 1/2 "	7 "	5 "	5 "	8 "	6 "		
45.00 - 60.00	5 "	3 1/2 "	5 1/2 "	4 "	4 "	8 "	N/A		

NOTE: EMBEDMENT AND EDGE DISTANCE ARE BEYOND ANY FINISH MATERIAL.

STATE OF TEXAS — WALTER A. TILLIT — 2/18/11

P.E. SEAL/SIGNATURE/DATE

TEXAS DEPARTMENT OF INSURANCE – 2006

WALTER A. TILLIT Jr. P.E.
PROFESSIONAL ENGINEER

6355 N.W. 36TH. ST., STE. 305
VIRGINIA GARDENS, FL. 33166
PHONE : (305) 871-1530 , FAX : (305) 871-1531

TEXAS LIC. # 90691

GPP FABRIC SHUTTER – SERIES 2000

M.C.V.
DRAWN BY:

GLOBAL PROTECTION PRODUCTS, LLC.
DBA – ATRIUM WINDOWS AND DOORS
4800 S.W. 51 STREET
DAVIE, FL. 33314
PHONE: (954)689-7545, FAX: (954)689-8797

02/16/11
DATE

11-013
DRAWING No

REV. No	DESCRIPTION	DATE	REV. No	DESCRIPTION	DATE
1	–	–	3	–	–
2	–	–	4	–	–

SCHEDULE # 3A

MAXIMUM DESIGN PRESSURE RATING (p.s.f.) AND CORRESPONDING MAXIMUM ANCHOR SPACING FOR OVERLAPPED MULTIPLE PANELS: DIRECT MOUNT

MAXIMUM DESIGN PRESSURE (p.s.f.)	**J** 1/4"ø ELCO PANELMATE PRO			**J1** 1/4"ø ELCO FEMALE ID PANELMATE			MAXIMUM PANEL SPAN (ft.)	APPLICABLE TO SECTIONS & ANY COMBINATION OF THEM
	TO CONCRETE	TO HOLLOW BLOCK OR GROUT FILLED BLOCK	TO WOOD	TO CONCRETE	TO HOLLOW BLOCK OR GROUT FILLED BLOCK	TO WOOD		
	W/ MIN. REQ'D. f'c = 3350 p.s.i. 2" embedment 2 1/2" E.D.	W/ MIN. REQ'D. f'm = 2071 p.s.i. 1 1/4" embedment 3" E.D.	W/ MIN. REQ'D. G = 0.55 1 7/8" Thread. Penet. 3/4" E.D.	W/ MIN. REQ'D. f'c = 3350 p.s.i. 1 3/4" embedment 2 1/2" E.D.	W/ MIN. REQ'D. f'm = 2071 p.s.i. 1 1/4" embedment 3" E.D.	W/ MIN. REQ'D. G = 0.55 1 7/8" Thread. Penet. 3/4" E.D.		
30.00 OR LESS	8 "	4 1/2 "	7 "	6 1/2 "	N/A	7 "	12 ' - 7 "	G - G
30.00 - 45.00	6 1/2 "	N/A	5 "	5 "	N/A	5 "		
45.00 - 60.00	5 1/2 "	N/A	4 1/2 "	4 "	N/A	4 1/2 "		
37.50 OR LESS	5 "	N/A	3 1/2 "	N/A	N/A	3 1/2 "	8 ' - 7 "	I - I
37.50 - 56.25	N/A	N/A	2 1/2 "	N/A	N/A	2 1/2 "		
56.25 - 75.00	N/A	N/A	2 1/2 "	N/A	N/A	2 1/2 "		

MAXIMUM DESIGN PRESSURE (p.s.f.)	**K** 1/4"ø ALL POINT SOLID-SET		**K1** 1/2"ø ELCO PANELMATE "L" INSERT			MAXIMUM PANEL SPAN (ft.)	APPLICABLE TO SECTIONS & ANY COMBINATION OF THEM
	TO CONCRETE	TO HOLLOW BLOCK	TO CONCRETE	TO GROUT FILLED BLOCK	TO HOLLOW BLOCK		
	W/ MIN. REQ'D. f'c = 3000 p.s.i. 7/8" embedment 3" E.D.	W/ MIN. REQ'D. f'm = 1800 p.s.i. 7/8" embedment 3" E.D.	W/ MIN. REQ'D. f'c = 2071 p.s.i. 1 5/8" embedment 4" E.D.	W/ MIN. REQ'D. f'm = 2676 p.s.i. 1 1/4" embedment 3 1/2" E.D.	W/ MIN. REQ'D. f'm = 1794 p.s.i. 1 1/4" embedment 3 1/2" E.D.		
30.00 OR LESS	8 "	6 "	8 "	8 "	8 "	12 ' - 7 "	G - G
30.00 - 45.00	6 "	4 1/2 "	7 "	5 1/2 "	5 1/2 "		
45.00 - 60.00	5 "	3 1/2 "	5 1/2 "	4 1/2 "	4 1/2 "		
37.50 OR LESS	4 1/2 "	3 1/2 "	5 "	4 1/2 "	4 1/2 "	8 ' - 7 "	I - I
37.50 - 56.25	3 1/2 "	N/A	4 "	3 1/2 "	3 1/2 "		
56.25 - 75.00	3 "	N/A	3 1/2 "	3 "	N/A		

MAXIMUM DESIGN PRESSURE (p.s.f.)	**O** 3/8"ø ELCO MODIFIED CONFLEX			**M** 5/16"ø ELCO HANGERMATE		**P** 1/2"ø POWER CALK-IN ANCHOR		MAXIMUM PANEL SPAN (ft.)	APPLICABLE TO SECTIONS & ANY COMBINATION OF THEM
	TO CONCRETE	TO GROUT FILLED BLOCK	TO HOLLOW BLOCK	TO CONCRETE	TO HOLLOW BLOCK	TO CONCRETE	TO HOLLOW BLOCK		
	W/ MIN. REQ'D. f'c = 1819 p.s.i. 2 1/2" embedment 3 3/4" E.D.	W/ MIN. REQ'D. f'm = 2400 p.s.i. 1 3/4" embedment 2 1/2" E.D.	W/ MIN. REQ'D. f'm = 2400 p.s.i. 1 1/4" embedment 2 1/2" E.D.	W/ MIN. REQ'D. f'c = 3650 p.s.i. 2" embedment 3 1/8" E.D.	W/ MIN. REQ'D. f'm = 1872 p.s.i. 1 1/4" embedment 3 1/8" E.D.	W/ MIN. REQ'D. f'c = 3000 p.s.i. 1 1/2" embedment 6" E.D.	W/ MIN. REQ'D. f'm = 1500 p.s.i. 1 1/2" embedment 6" E.D.		
30.00 OR LESS	8 "	6 1/2 "	4 1/2 "	8 "	5 1/2 "	8 "	8 "	12 ' - 7 "	G - G
30.00 - 45.00	8 "	4 1/2 "	3 1/2 "	8 "	N/A	8 "	6 1/2 "		
45.00 - 60.00	8 "	4 "	2 1/2 "	7 "	N/A	8 "	5 1/2 "		
37.50 OR LESS	8 "	3 1/2 "	3 "	6 1/2 "	N/A	8 "	5 "	8 ' - 7 "	I - I
37.50 - 56.25	8 "	2 1/2 "	2 1/2 "	5 "	N/A	7 "	N/A		
56.25 - 75.00	8 "	2 1/2 "	N/A	N/A	N/A	6 "	N/A		

NOTE: EMBEDMENT AND EDGE DISTANCE ARE BEYOND ANY FINISH MATERIAL.

STATE OF TEXAS
7/18/11
P.E. SEAL/SIGNATURE/DATE

TEXAS DEPARTMENT OF INSURANCE – 2006

WALTER A. TILLIT Jr. P.E.
PROFESSIONAL ENGINEER

6355 N.W. 36TH. ST., STE. 305
VIRGINIA GARDENS, FL. 33166
PHONE : (305) 871-1530 , FAX : (305) 871-1531

TEXAS LIC. # 90691

GPP FABRIC SHUTTER - SERIES 2000

GLOBAL PROTECTION PRODUCTS, LLC.
DBA - ATRIUM WINDOWS AND DOORS
4800 S.W. 51 STREET
DAVIE, FL. 33314
PHONE: (954)689-7545, FAX: (954)689-8797

REV. No	DESCRIPTION	DATE	REV. No	DESCRIPTION	DATE
1	–	–	3	–	–
2	–	–	4	–	–

M.C.V.
DRAWN BY:

02/16/11
DATE

11-013
DRAWING No