6.8 ACCORDION SHUTTER

TABLE 1
ALLOWABLE SPAN SCHEDULE

DESIGN WIND LOAD (PSF)	POSITIVE AND NEGATIVE WIND LOAD ALL MOUNTING CONDITIONS**
50.0	156"
55.0	155"
60.0	148"
65.0	143"
70.0	137"
75.0	133"
80.0	128"
85.0	125"
90.0	121"
95.0	118"
100.0	115"
105.0	112"
110.0	110"
115.0	107"
120.0	105"
125.0	103"
130.0	101"
135.0	99"
140.0	95"
145.0	92"
150.0	89"
155.0	86"
160.0	83"
165.0	81"
170.0	78"
175.0	76"
180.0	74"
185.0	72"
190.0	70"
195.0	68"
200.0	66"

** FOR BUILDOUT MOUNT MAXIMUM SPANS AND PRESSURES, SEE TABLE C ON SHEET 6/12

TABLE 1 AND 2 NOTES:

1. DESIGN PRESSURES SHOWN IN "ACCORDION SHUTTER SPAN SCHEDULE" ABOVE ARE MAXIMUM ALLOWABLE DESIGN PRESSURES AT EACH RESPECTIVE SHUTTER SPAN.
2. NO SEPARATION FROM GLASS IS REQUIRED FOR INSTALLATIONS IN WIND ZONES 1 THROUGH 3 AND OUTSIDE OF ESSENTIAL FACILITIES.
3. THE 6.8 SYSTEM MAY BE MOUNTED WITH THE INSIDE AND OUTSIDE OF THE SHUTTER BEING REVERSED. FOR EXAMPLE: IT IS PERMISSIBLE TO MOUNT TO A WOOD OR CONCRETE BEAM WITH THE BACK OF THE SLAT FACING OUTWARD.
4. LINEAR INTERPOLATION BETWEEN SHUTTER SPANS IS NOT PERMITTED. FOR SPANS BETWEEN THOSE INDICATED ABOVE, THE DESIGN PRESSURES FOR THE NEXT HIGHER SPAN SHALL BE USED.

TABLE 2
ALLOWABLE SPAN SCHEDULE
ASTM WIND ZONE 4 AND ESSENTIAL FACILITIES ONLY

POSITIVE DESIGN PRESSURE (PSF)	SHUTTER SPAN	MINIMUM SEPARATION FROM GLASS	
		INSTALLATIONS ≤ 30' ABOVE GRADE (IN.)	INSTALLATIONS > 30' ABOVE GRADE (IN.)
30	60"	3.1"	1.1"
	99"	3.1"	1.4"
	120"	3.1"	1.9"
	156"	5.8"	3.5"
40	60"	3.1"	1.1"
	99"	3.1"	1.5"
	108"	3.1"	1.8"
	120"	3.1"	2.2"
	132"	5.8"	2.7"
	156"	5.8"	4.3"
50	60"	3.1"	1.1"
	99"	3.1"	1.7"
	108"	3.1"	2.0"
	120"	3.1"	2.5"
	132"	5.8"	3.1"
	156"	5.8"	5.2"
60	60"	3.1"	1.1"
	99"	3.1"	1.8"
	108"	3.1"	2.1"
	120"	3.1"	2.7"
	148"	5.8"	5.0"
70	60"	3.1"	1.1"
	84"	3.1"	1.5"
	99"	3.1"	1.9"
	120"	3.1"	3.0"
	137"	5.8"	4.5"
90	60"	3.1"	1.2"
	84"	3.1"	1.6"
	99"	3.1"	2.2"
	120"	3.7"	3.6"
	121"	5.8"	3.7"
110	60"	3.1"	1.2"
	84"	3.1"	1.8"
	99"	3.1"	2.5"
	110"	3.3"	3.3"
120	60"	3.1"	1.2"
	84"	3.1"	1.8"
	99"	3.1"	2.6"
	105"	3.1"	3.0"

eyewall™ Armor
HURRICANE PROTECTION

FRANK L. BENNARDO, P.E.
LIC # 96064
09/06/2019
FRANK L. BENNARDO
96064
LICENSED
STATE OF TEXAS
PROFESSIONAL ENGINEER
PRINTED NAME OF CERTIFYING P.E. APPEARS BELOW
FRANK L. BENNARDO, P.E.
LIC # 96064

VALID FOR 1 PERMIT ONLY U.N.O.

NOTICE: IF THIS SHEET DOES NOT CONTAIN AN ORIGINAL SIGNATURE & ENGINEER SEAL: THERE IS A DIGITAL SIGNATURE ON SHEET 1, THIS SHEET IS PART OF A DIGITALLY SIGNED FILE, SHALL REMAIN IN DIGITAL FORMAT, & **PRINTED COPIES OF THIS DOCUMENT ARE NOT CONSIDERED SIGNED AND SEALED.** IF THERE IS NO DIGITAL SIGNATURE ON SHEET 1 OR THIS SHEET DOES NOT CONTAIN AN ENGINEER'S ORIGINAL SIGNATURE & SEAL, THIS SHEET IS A COPY/DRAFT.

ENGINEERING EXPRESS®
CORPORATE OFFICE:
160 SW 12th AVE, SUITE 106
DEERFIELD BEACH, FL 33442
P: (954) 354-0660 F: (954) 354-0443
E: HELLO@ENGINEERINGEXPRESS.COM
ENGINEERINGEXPRESS.COM
CERT OF AUTH #F-11383

TOWN & COUNTRY INDUSTRIES
400 WEST McNAB ROAD
FT. LAUDERDALE, FL 33309
(954) 970-9999

6.8 ACCORDION SHUTTER
TEXAS DEARTMENT OF INSURANCE
INTERNATIONAL BUILDING CODE

REMARKS	DRWN	CHKD	DATE
INIT ISSUE	RWN	FLB	05/24/18
-	-	-	-
-	-	-	-
-	-	-	-
-	-	-	-
-	-	-	-

THIS DOCUMENT IS THE PROPERTY OF ENGINEERING EXPRESS, AND SHALL NOT BE REPRODUCED IN WHOLE OR IN PART WITHOUT WRITTEN CONSENT OF ENGINEERING EXPRESS. ALTERATIONS, ADDITIONS, OR OTHER MARKINGS TO THIS DOCUMENT ARE NOT PERMITTED AND INVALIDATE OUR CERTIFICATION.

COPYRIGHT ENGINEERING EXPRESS®

15-2338

SCALE: NTS UNLESS NOTED

09/06/2019 - 9:31am rickn V:\projects\15-2338 6.8 Accordion Shutter - FSA - Update FL13757.1 for 2014 Florida Bldg Cod-Project\WPTDI Submittal\15-2338d-Dwg-TDI.dwg

GENERAL NOTES:

1. THIS SYSTEM HAS BEEN TESTED AND EVALUATED IN ACCORDANCE WITH THE 2006 AND 2015 INTERNATIONAL BUILDING CODE AND THE INTERNATIONAL RESIDENTIAL CODE WITH TEXAS REVISIONS EFFECTIVE JANUARY 1ST, 2008. THIS SYSTEM IS APPROVED FOR USE IN THE SEAWARD AND INLAND AREAS AS DEFINED BY THE TEXAS DEPARTMENT OF INSURANCE.
2. POSITIVE AND NEGATIVE DESIGN PRESSURES CALCULATED FOR USE WITH THIS SYSTEM SHALL BE DETERMINED PER SEPARATE ENGINEERING IN ACCORDANCE WITH THE GOVERNING CODE. PRESSURE REQUIREMENTS AS DETERMINED IN ACCORDANCE WITH ASCE 7 AND CHAPTER 1609 OF THE INTERNATIONAL BUILDING CODE SHALL BE LESS THAN OR EQUAL TO THE POSITIVE OR NEGATIVE DESIGN PRESSURE CAPACITY VALUES LISTED HEREIN FOR ANY ASSEMBLY AS SHOWN.
3. TESTING WAS CONDUCTED IN ACCORDANCE WITH ASTM E1886/E1996/E330.
4. DESIGN PRESSURES NOTED HEREIN ARE BASED ON MAXIMUM TESTED PRESSURES DIVIDED BY A 1.5 SAFETY FACTOR.
5. NO INCREASE IN ALLOWABLE STRESS HAS BEEN USED IN THE DESIGN OF THESE PRODUCTS. WIND LOAD DURATION FACTOR Cd = 1.6 WAS USED FOR WOOD ANCHOR DESIGN.
6. DETERMINE THE POSITIVE AND NEGATIVE DESIGN LOADS TO USE WHEN REFERENCING THESE DOCUMENTS IN ACCORDANCE WITH THE GOVERNING CODE AND GOVERNING WIND VELOCITY. FOR WIND LOAD CALCULATIONS IN ACCORDANCE WITH ASCE 7, A DIRECTIONALITY FACTOR OF Kd =0.85 SHALL BE USED.
7. THE SYSTEM DETAILED HEREIN IS GENERIC AND DOES NOT PROVIDE INFORMATION FOR A SPECIFIC SITE.
8. THESE APPROVAL DOCUMENTS ARE SUITABLE TO BE APPLIED BY THE CONTRACTOR PROVIDED THE CONTRACTOR DOES NOT DEVIATE FROM THE CONDITIONS DETAILED HEREIN AND THE CONTRACTOR VERIFIES THAT THE EXISTING STRUCTURE DOES NOT DEVIATE IN EITHER FORM OR MATERIAL FROM THE STRUCTURAL SUBSTRATES DETAILED HEREIN.
9. WHEN THE SITE CONDITIONS DEVIATE FROM THESE APPROVAL DOCUMENTS, THE BUILDING OFFICIAL MAY REQUIRE THAT SITE SPECIFIC DOCUMENTS BE PREPARED, SIGNED, DATED AND SEALED BY A LICENSED ENGINEER OR REGISTERED ARCHITECT, WHICH DETAIL AND JUSTIFY THE DEVIATION,. AS A CONDITION TO THE BUILDING OFFICIAL GRANTING HIS/HER APPROVAL.
10. EACH SHUTTER ASSEMBLY SHALL BE PERMANENTLY LABELED WITH THE FOLLOWING MINIMUM INFORMATION:

    TOWN & COUNTRY INDUSTRIES
    FORT LAUDERDALE, FL
    ACCORDIAN SHUTTER
    MISSILE LEVEL D - ASTM E1886, E1996 & E330
    TDI EVALUATED

11. ALL EXTRUSIONS SHOWN SHALL BE 6063-T6 ALUMINUM ALLOY, U.O.N., WITH A MINIMUM Fy OF 25 K.S.I.
12. ALL BOLTS AND WASHERS (EXCLUDING INSTALLATION) SHALL BE STAINLESS STEEL WITH A MINIMUM TENSILE STRENGTH OF 60 K.S.I., U.O.N. POP RIVETS SHALL BE 1/4"Ø OR 3/16"Ø 5052 ALUM. ALLOY.
13. ALL SHUTTERS SHALL HAVE A LOCKING MECHANISM CONSISTING OF THUMBSCREW, PUSH LOCK OR BOX LOCK AT CENTER OR SIDE CLOSURE.
14. TOP AND BOTTOM DETAILS MAY BE INTERCHANGED AS FIELD CONDITIONS REQUIRE.
15. FLOOR TRACKS MAY BE REMOVABLE AT NON-STACKING LOCATIONS. USE REMOVABLE ANCHORS.
16. MOUNTING EXTRUSIONS MAY BE BENT TO FORM A CURVE WITH A MIN. RADIUS OF 10".
17. ALL DIMENSIONS SHOWN INCLUDE POWDER COATING FINISH.
18. SEALANT SHALL BE USED ON ANCHORS OR TRACKS WHEREVER WATER SEEPAGE IS POSSIBLE.
19. ALL STEEL IN CONTACT WITH ALUMINUM SHALL BE PAINTED OR PLATED AS PRESCRIBED IN THE ABOVE-NOTED BUILDING CODE
20. THE 6.8 SYSTEM MAY BE MOUNTED WITH THE INSIDE AND OUTSIDE OF THE SHUTTER BEING REVERSED. FOR EXAMPLE: IT IS PERMISSIBLE TO MOUNT TO A WOOD OR CONCRETE BEAM WITH THE BACK OF THE SLAT FACING OUTWARD. FOR THIS CONDITION POSITIVE ALLOWABLE DESIGN PRESSURES AS NOTED IN TABLE 1 ARE IN THE DIRECTION TOWARDS THE HOST STRUCTURE AND NEGATIVE ALLOWABLE DESIGN PRESSURES ARE AWAY FROM THE HOST STRUCTURE.
21. SHUTTER MAY BE INSTALLED WITH UP TO (2) ADDITIONAL BLADES OF SLACK

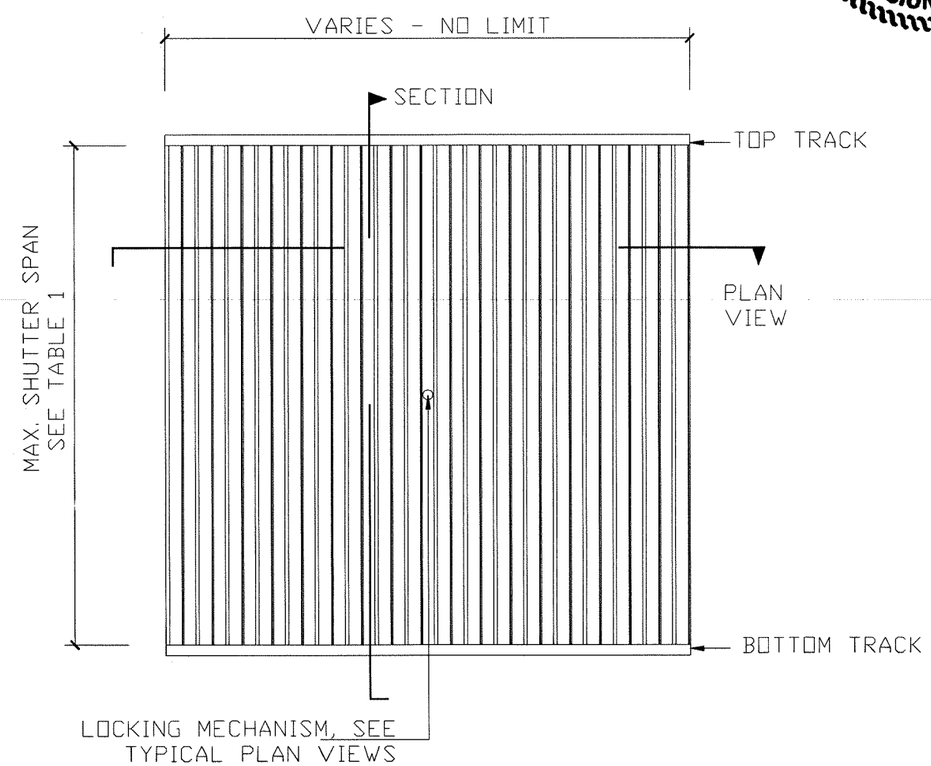

TYPICAL ACCORDION SHUTTER ELEVATION

N.T.S.

FRANK L. BENNARDO, P.E.
PE# 96064

STATE OF TEXAS
FRANK L. BENNARDO
96064
LICENSED
PROFESSIONAL ENGINEER

09/06/2019

IF CHECKED, CERTIFYING PE ADDRESS BELOW
FRANK L. BENNARDO, P.E.

VALID FOR 1 PERMIT ONLY U.N.O.

NOTICE: IF THIS SHEET DOES NOT CONTAIN AN ORIGINAL SIGNATURE & ENGINEER SEAL: IF THERE IS A DIGITAL SIGNATURE ON SHEET 1, THIS SHEET IS PART OF A DIGITALLY SIGNED FILE, SHALL REMAIN IN DIGITAL FORMAT, & **PRINTED COPIES OF THIS DOCUMENT ARE NOT CONSIDERED SIGNED AND SEALED.** IF THERE IS NO DIGITAL SIGNATURE ON SHEET 1 OR THIS SHEET DOES NOT CONTAIN AN ENGINEER'S ORIGINAL SIGNATURE & SEAL, THIS SHEET IS A COPY/DRAFT.

ENGINEERING EXPRESS®
CORPORATE OFFICE:
160 SW 12th AVE, SUITE 106
DEERFIELD BEACH, FL 33442
P: (954) 354-0660 F: (954) 354-0443
E: HELLO@ENGINEERINGEXPRESS.COM
ENGINEERINGEXPRESS.COM
CERT OF AUTH #F-11383

TOWN & COUNTRY INDUSTRIES
400 WEST McNAB ROAD
FT. LAUDERDALE, FL 33309
(954) 970-9999

6.8 ACCORDION SHUTTER
TEXAS DEARTMENT OF INSURANCE
INTERNATIONAL BUILDING CODE

REMARKS	DRWN	CHK'D	DATE
INIT ISSUE	RWN	FLB	05/24/18

THIS DOCUMENT IS THE PROPERTY OF ENGINEERING EXPRESS, AND SHALL NOT BE REPRODUCED IN WHOLE OR IN PART WITHOUT WRITTEN CONSENT OF ENGINEERING EXPRESS. ALTERATIONS, ADDITIONS, OR OTHER MARKINGS TO THIS DOCUMENT ARE NOT PERMITTED AND INVALIDATE OUR CERTIFICATION.

COPYRIGHT ENGINEERING EXPRESS®

15-2338

SCALE: NTS UNLESS NOTED

09/06/2019 - 9:31am rickn V:\projects\15-2338 6.8 Accordion Shutter - FSA - Update FL13757.1 for 2014 Florida Bldg Cod-Project\WP\TDI Submittal\15-2338d-Dwg-TDI.dwg

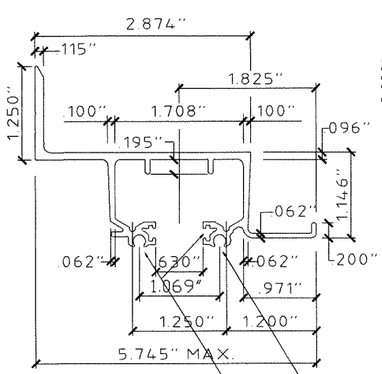

1 WALL
SCALE: HALF SIZE

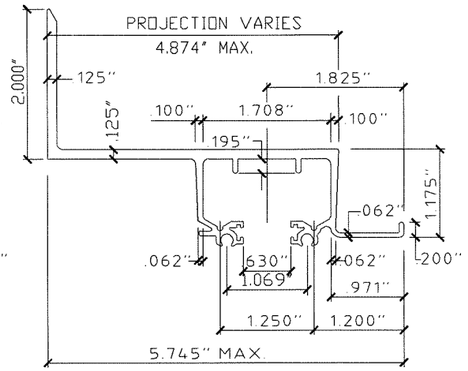

2 BUILD OUT WALL
SCALE: HALF SIZE

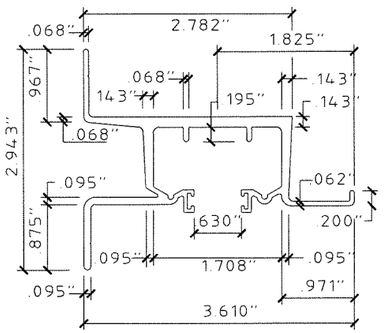

3 HEAVY 2-LEG WALL
SCALE: HALF SIZE

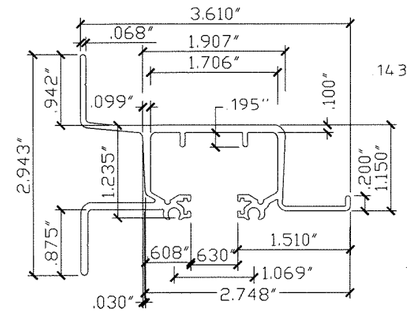

4 LITE 2-LEG WALL
SCALE: HALF SIZE

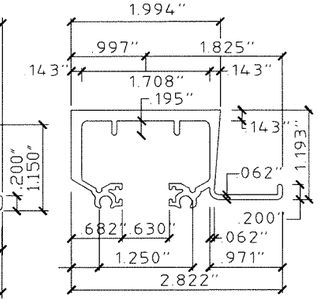

5 HEAVY HEADER/SILL
SCALE: HALF SIZE

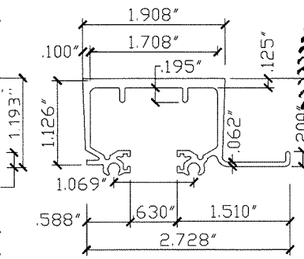

6 LITE HEADER/SILL
SCALE: HALF SIZE

WHERE SHOWN SCREW BOSSES & FELT GROVES ARE OPTIONAL ON ALL EXTRUSIONS

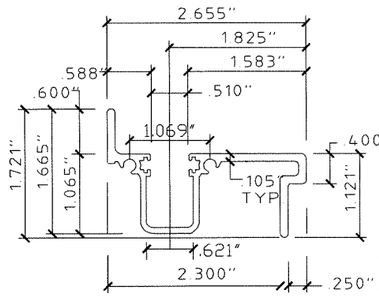

7 SILL
SCALE: HALF SIZE

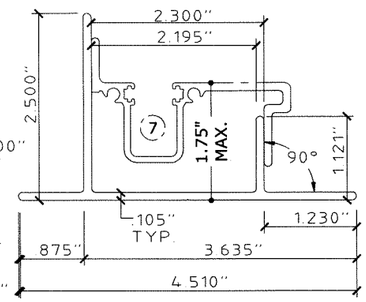

8 SILL ADAPTER
SCALE: HALF SIZE

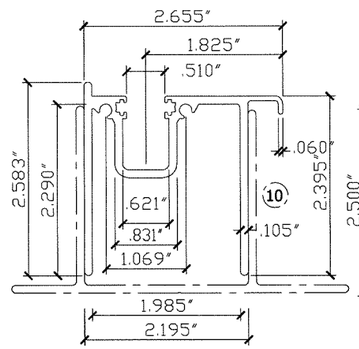

9 EXTENDED SILL
SCALE: HALF SIZE

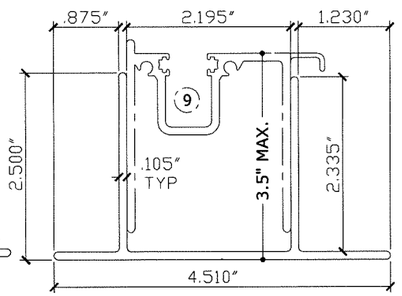

10 EXTENDED SILL ADAPTOR
SCALE: HALF SIZE

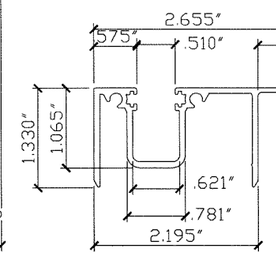

11 MID SILL
SCALE: HALF SIZE

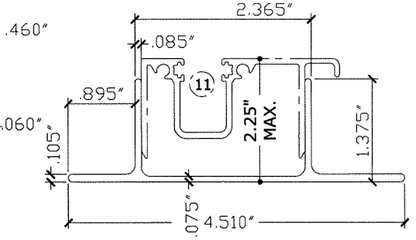

12 MID SILL ADAPTOR
SCALE: HALF SIZE

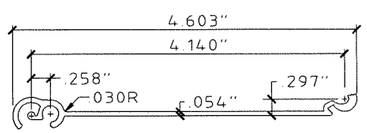

13 TYP. 6.8 SLAT/BLADE
SCALE: HALF SIZE

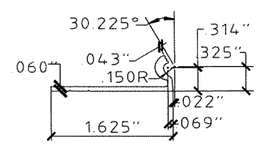

17 6.8 STARTER
SCALE: HALF SIZE

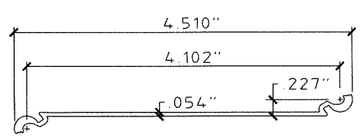

15 6.8 STACK/CONECTOR SLAT/BLADE
SCALE: HALF SIZE

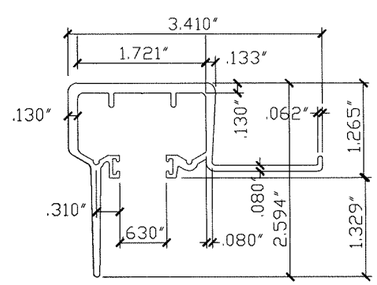

14 CEILING HEADER/SILL
SCALE: HALF SIZE

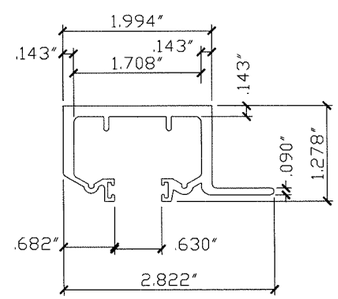

16 RADIUS CEILING HEADER/SILL
SCALE: HALF SIZE

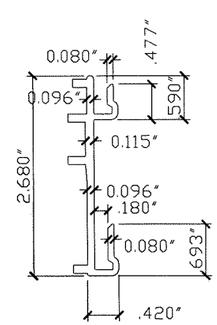

18a WALL SILL CLIP
SCALE: HALF SIZE

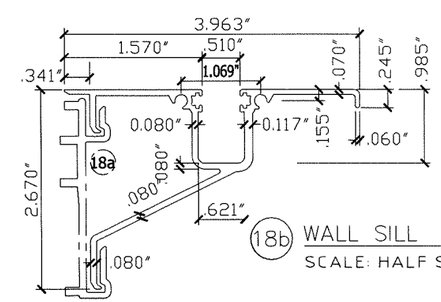

18b WALL SILL
SCALE: HALF SIZE

FRANK L. BENNARDO, P.E.
PE 36054
STATE OF TEXAS
09/06/2019
FRANK L. BENNARDO
36054
PROFESSIONAL ENGINEER

THIS DOCUMENT CERTIFIES THAT THE ORIGINAL SIGNATURE & SEAL OF FRANK L. BENNARDO, PE 36054 VALID FOR 1 PERMIT ONLY W.N.O.

NOTICE: THIS SHEET DOES NOT CONTAIN AN ORIGINAL SIGNATURE & ENGINEER SEAL. IF THIS IS A DIGITAL SIGNATURE ON SHEET 1 OF THIS SET, THEN THIS DIGITALLY SIGNED FILE, SHALL REMAIN IN DIGITAL FORMAT. **PRINTED COPIES OF THIS DOCUMENT ARE NOT CONSIDERED SIGNED AND SEALED.** IF THERE IS NO DIGITAL SIGNATURE ON SHEET 1 OR THIS SHEET DOES NOT CONTAIN AN ENGINEER'S ORIGINAL SIGNATURE & SEAL, THIS SHEET IS A COPY/DRAFT.

ENGINEERING EXPRESS®
CORPORATE OFFICE:
160 SW 12th AVE, SUITE 106
DEERFIELD BEACH, FL 33442
P: (954) 354-0660 F: (954) 354-0443
E: HELLO@ENGINEERINGEXPRESS.COM
ENGINEERINGEXPRESS.COM
CERT OF AUTH #F-11383

TOWN & COUNTRY INDUSTRIES
400 WEST McNAB ROAD
FT. LAUDERDALE, FL 33309
(954) 970-9999

6.8 ACCORDION SHUTTER
TEXAS DEARTMENT OF INSURANCE
INTERNATIONAL BUILDING CODE

REMARKS	DRWN	CHKD	DATE
INIT ISSUE	RWN	FLB	05/24/18

THIS DOCUMENT IS THE PROPERTY OF ENGINEERING EXPRESS, AND SHALL NOT BE REPRODUCED IN WHOLE OR IN PART WITHOUT WRITTEN CONSENT OF ENGINEERING EXPRESS. ALTERATIONS, ADDITIONS, OR OTHER MARKINGS TO THIS DOCUMENT ARE NOT PERMITTED AND INVALIDATE OUR CERTIFICATION.

COPYRIGHT ENGINEERING EXPRESS®

15-2338

SCALE: NTS UNLESS NOTED

09/06/2019 - 9:31am rickn V:\projects\15-2338 6.8 Accordion Shutter - FSA - Update FL13757.1 for 2014 Florida Bldg Cod-Project\WP\TDI Submittal\15-2338d-Dwg-TDI.dwg

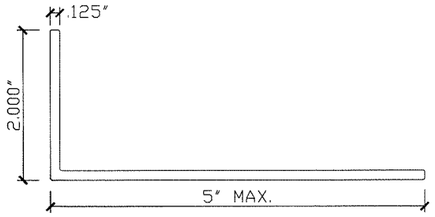

(19) ANGLE
SCALE: HALF SIZE

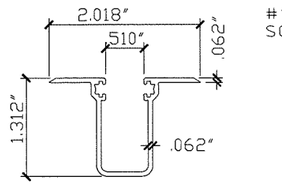

(20) RECESS SILL
SCALE: HALF SIZE

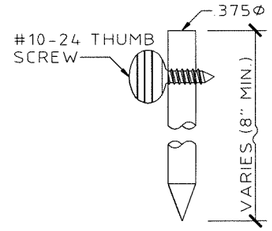

FOR USE WITH (33) AND (34) ONLY

(21) SLIDE ROD
SCALE: HALF SIZE

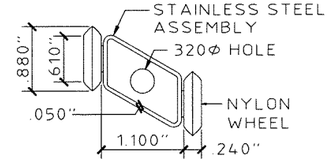

TYP. AT EVERY OTHER INSIDE JOINT AT TOP.

(22) ROLLER ASSEMBLY
SCALE: HALF SIZE

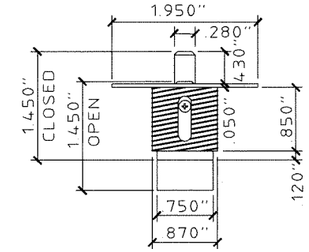

CYLINDER-SOLID BRASS, NICKEL PLATED
HOUSING-ZINC DICAST, POWDER COATED
NOTE. MAY BE KEY OPERATED OUTSIDE OR THUMB TURN OPERATED INSIDE

(23) BRASS PUSH LOCK
SCALE: HALF SIZE

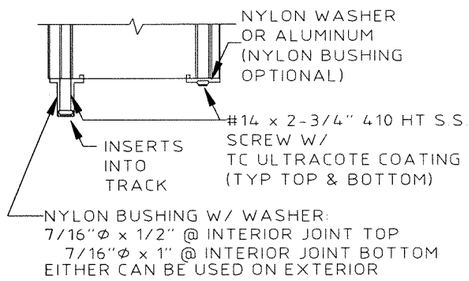

(24) BUSHING ASSEMBLY DETAIL
SCALE: HALF SIZE

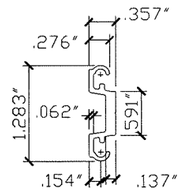

(26) BOX CENTER INSERT
SCALE: HALF SIZE

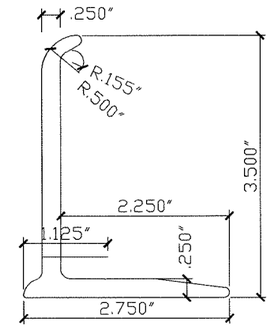

(27) RAINGUARD
SCALE: HALF SIZE

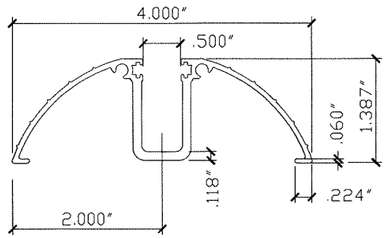

(28) DECORATIVE FLOOR TRACK
SCALE: HALF SIZE

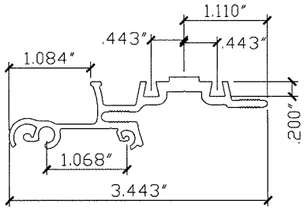

(29) 2003 6.8 CENTER MATE
SCALE: HALF SIZE

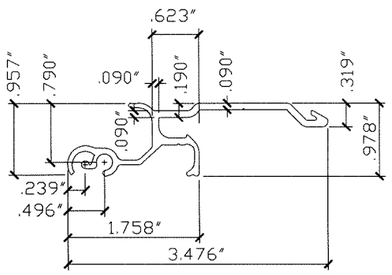

(30) UNIMATE LOCK
SCALE: HALF SIZE

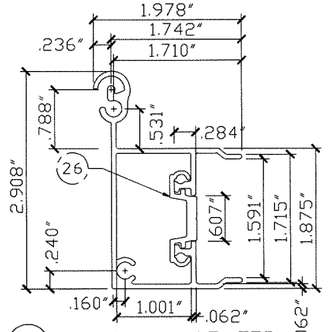

(31) MALE BOX CENTER
SCALE: HALF SIZE

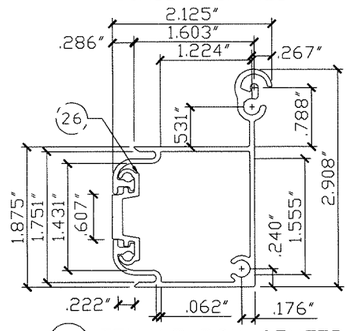

(32) FEMALE BOX CENTER
SCALE: HALF SIZE

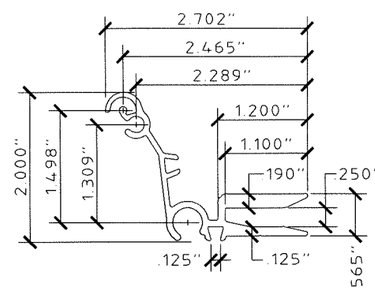

(33) OUTSIDE CENTER MATE
SCALE: HALF SIZE

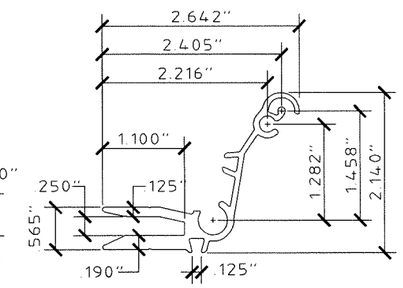

(34) INSIDE CENTER MATE
SCALE: HALF SIZE

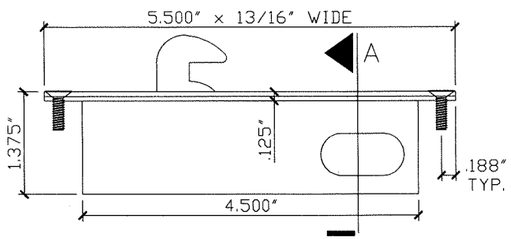

DELTA MODEL 2022
INDUSTRIAL SYSTEMS

(35) BOX LOCK
SCALE: HALF SIZE

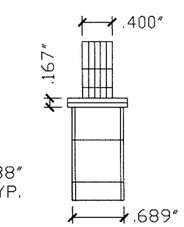

SECTION A

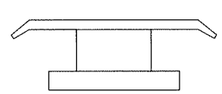

POWDER COATED, ZINC DIE-CAST

(36) T-LOCK ADAPTER (OPTIONAL)
SCALE: HALF SIZE

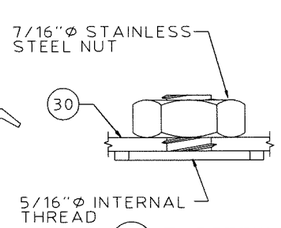

(37) T-SCREW INSERT
SCALE: FULL SIZE

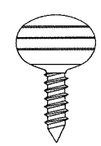

HEAD STYLE VARIES

(38) THUMB SCREW
SCALE: FULL SIZE

1/4-20x1 OR 5/16-18x1
MACHINE SCREW STAINLESS STEEL

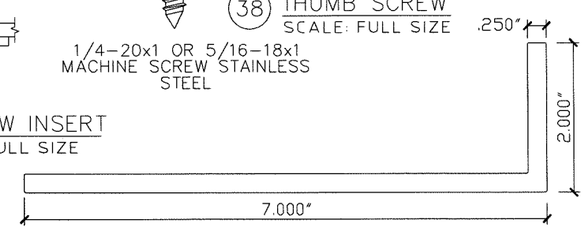

(39) 2X7 ANGLE
SCALE: HALF SIZE

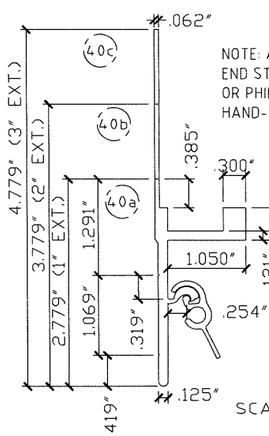

NOTE: ATTACHMENT SCREWS FOR END STRIPS SHALL BE #10 TORX OR PHILLIPS DRIVE SCREWS, HAND-TIGHTENED ONLY.

(40a) (40b) (40c)
END STRIP 1" 2" & 3" EXT
SCALE: HALF SIZE

FRANK L. BENNARDO, P.E.
PE# 96064

09/06/2019

CHECKED, CERTIFYING P.E. APPEARS BELOW
FRANK L. BENNARDO, P.E.
PE# 96064

VALID FOR 1 PERMIT ONLY U.N.O.

NOTICE: IF THIS SHEET DOES NOT CONTAIN AN ORIGINAL SIGNATURE & ENGINEER SEAL: IF THERE IS A DIGITAL SIGNATURE ON SHEET 1, THIS SHEET IS PART OF A DIGITALLY SIGNED FILE, SHALL REMAIN IN DIGITAL FORMAT, & **PRINTED COPIES OF THIS DOCUMENT ARE NOT CONSIDERED SIGNED AND SEALED.** IF THERE IS NO DIGITAL SIGNATURE ON SHEET 1 OR THIS SHEET DOES NOT CONTAIN AN ENGINEER'S ORIGINAL SIGNATURE & SEAL, THIS SHEET IS A COPY/DRAFT.

STATE OF TEXAS
FRANK L. BENNARDO
96064
LICENSED
PROFESSIONAL ENGINEER

ENGINEERING EXPRESS®
CORPORATE OFFICE:
160 SW 12th AVE, SUITE 106
DEERFIELD BEACH, FL 33442
P: (954) 354-0660 F: (954) 354-0443
E: HELLO@ENGINEERINGEXPRESS.COM
ENGINEERINGEXPRESS.COM
CERT OF AUTH #F-11383

TOWN & COUNTRY INDUSTRIES
400 WEST McNAB ROAD
FT. LAUDERDALE, FL 33309
(954) 970-9999

6.8 ACCORDION SHUTTER
TEXAS DEARTMENT OF INSURANCE
INTERNATIONAL BUILDING CODE

REMARKS	DRWN	CHKD	DATE
INIT ISSUE	RWN	FLB	05/24/18

THIS DOCUMENT IS THE PROPERTY OF ENGINEERING EXPRESS, AND SHALL NOT BE REPRODUCED IN WHOLE OR PART WITHOUT WRITTEN CONSENT OF ENGINEERING EXPRESS. ALTERATIONS, ADDITIONS, OR OTHER MARKINGS TO THIS DOCUMENT ARE NOT PERMITTED AND INVALIDATE OUR CERTIFICATION.

COPYRIGHT ENGINEERING EXPRESS®

15-2338

SCALE: NTS UNLESS NOTED

09/06/2019 - 9:31am rickn V:\projects\15-2338 6.8 Accordion Shutter - FSA - Update FL13757.1 for 2014 Florida Bldg Cod-Project\WP\TDI Submittal\15-2338d-Dwg-TDI.dwg

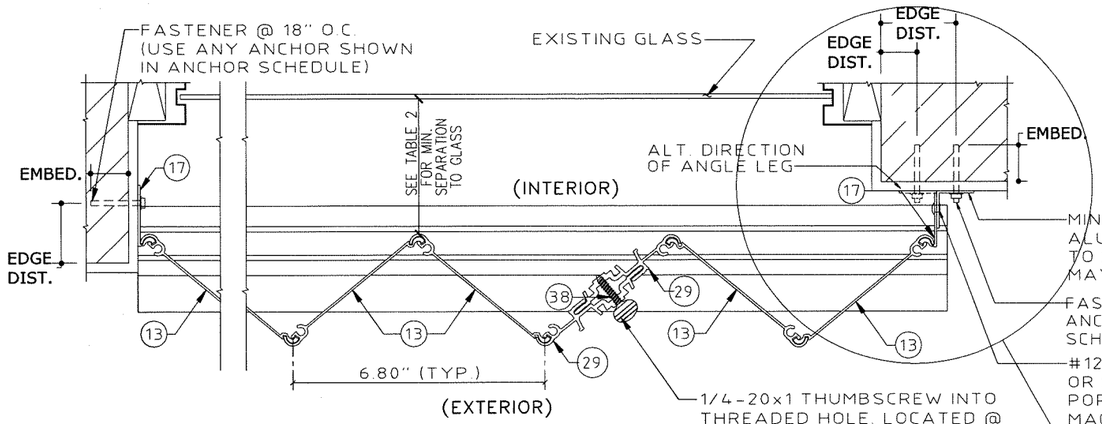

TYPICAL PLAN VIEW
SCALE: 3" = 1'-0"

MIN. 0.062" THICK 6063-T6 ALUM. ANGLE 1" x 1" MIN. TO 2" x 5" MAX. (ANGLE LEG MAY BE REVERSED)

FASTENER @ 18" O.C. (USE ANY ANCHOR SHOWN IN ANCHOR SCHEDULE, 1" MIN. EDGE DISTANCE).

#12 x 1/2" GALVANIZED OR S.S. SMS, 3/16"Φ ALUM. POP RIVET, OR 1/4-20 MACHINE BOLT & NUT @ 18" O.C.

1/4-20x1 THUMBSCREW INTO THREADED HOLE. LOCATED @ 1/3 SPAN TO 2/3 SPAN FROM BOTTOM OF SHUTTER FOR BLADES ≤ 8'-3". USE TWO THUMBSCREWS ON BLADES > 8'-3", ONE @ 1/3 SPAN AND ONE AT 2/3 SPAN FROM BOTTOM OF BLADE, TYPICAL. FOR LOCKING SHUTTERS, A BRASS PUSH LOCK (23) MAY BE SUBSTITUTED WHEN USED WITH CENTERMATE #29 AS SHOWN, RECEIVING HOLE FOR THUMB SCREW MAY BE 7/16"

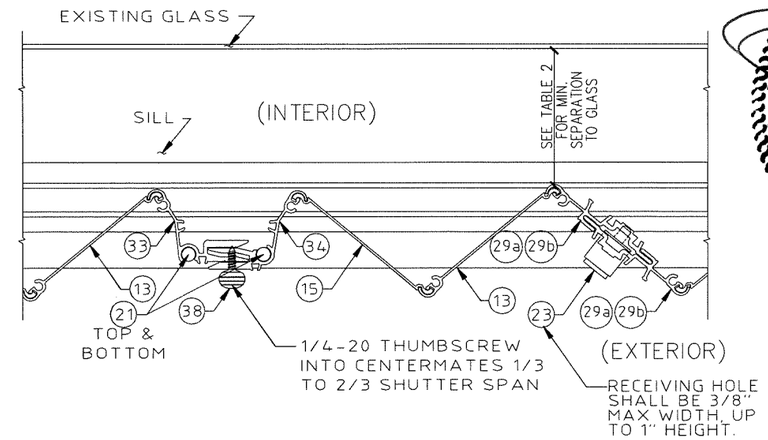

MULTIPLE SHUTTER ASSEMBLY
SCALE: 3" = 1'-0"

LOCKING DETAILS FOR CENTER MATES SHOWN ON RANDOM DETAILS

USE (1) BRASS PUSH LOCK OR (1) 5/16-18 THUMB SCREW INTO THREADED INSERT (37) AT 1/3 SPAN TO 2/3 SPAN FROM BOTTOM OF SHUTTER RECEIVING HOLE SHALL BE 3/8" MAX WIDTH, UP TO 1" HEIGHT.

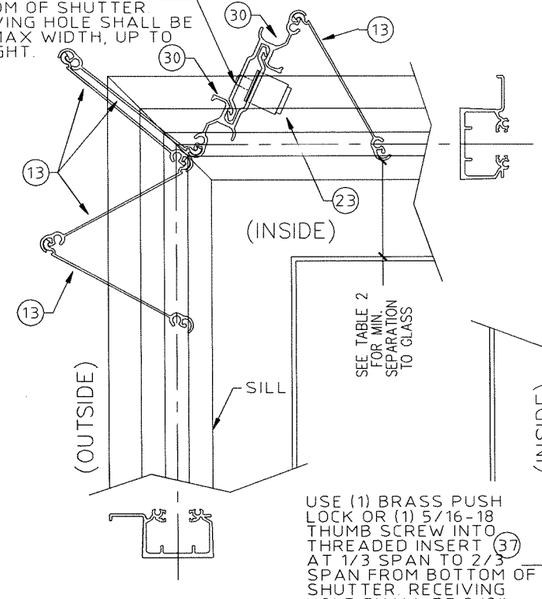

CC1 TYPICAL OUTSIDE CORNER CLOSURE DETAILS WO/CORNER POST
NTS

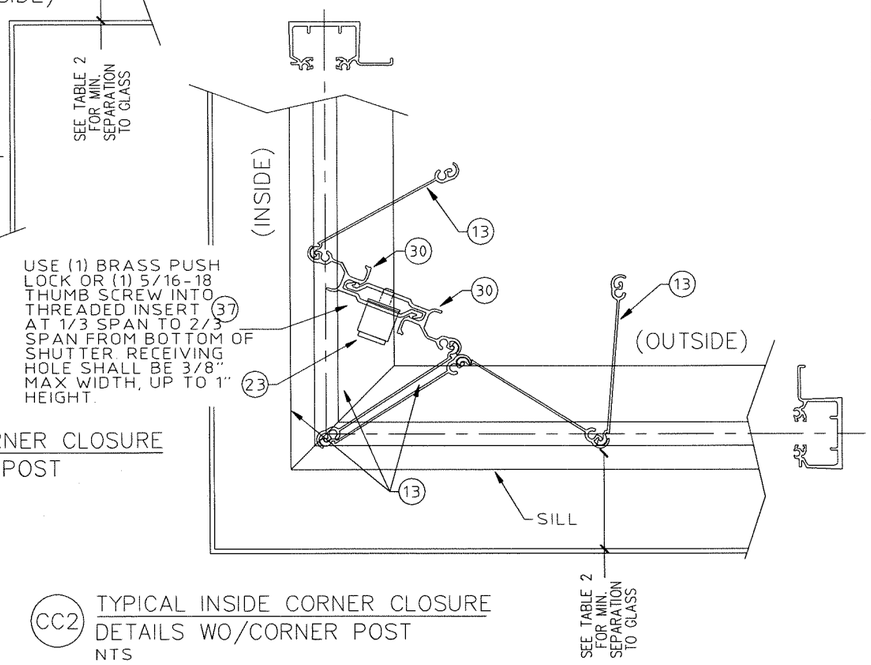

USE (1) BRASS PUSH LOCK OR (1) 5/16-18 THUMB SCREW INTO THREADED INSERT (37) AT 1/3 SPAN TO 2/3 SPAN FROM BOTTOM OF SHUTTER RECEIVING HOLE SHALL BE 3/8" MAX WIDTH, UP TO 1" HEIGHT.

CC2 TYPICAL INSIDE CORNER CLOSURE DETAILS WO/CORNER POST
NTS

END STRIP SCHEDULE

	PSF	SPAN
1" B/O (2.7") (40c)	62	108"
	72	100"
	82	94"
	112	80"
	132	75"
2" B/O (3.7") (40b)	62	95"
	72	88"
	82	83"
3" B/O (4.7") (40c)	62	86"
	72	79"
	82	74"
1.5"x3" x0.093" ANGLE	45	93"
	52	87"
	57	83"
	60	81"
	64	78"
	70	75"
	73	73"
2"x3" x0.125" ANGLE	45	139"
	52	129"
	57	123"
	60	120"
	64	116"
	70	111"
	73	109"
2"x4" x0.125" ANGLE	45	145"
	52	135"
	57	129"
	60	125"
	64	121"
	70	116"
	73	114"

FOR GREATER SPANS OR LOADS THAN SHOWN IN END STRIP SCHEDULE, END STRIPS REQUIRE A 1"X1" .090" CLIP ANGLE MID SPAN USING ANY ANCHOR ON THE ANCHOR SCHEDULE & #14x3/4" TEK SCREW OR 1/4-20 BOLT TO END STRIP.

SEE END STRIP SCHEDULE FOR MAX. SPAN WHEN USING 40a, 40b OR 40c

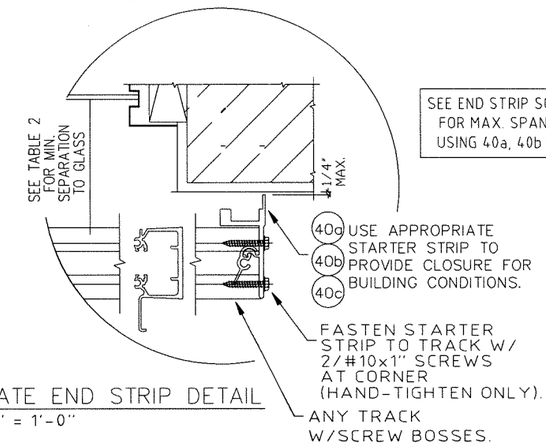

ALTERNATE END STRIP DETAIL
SCALE: 3" = 1'-0"

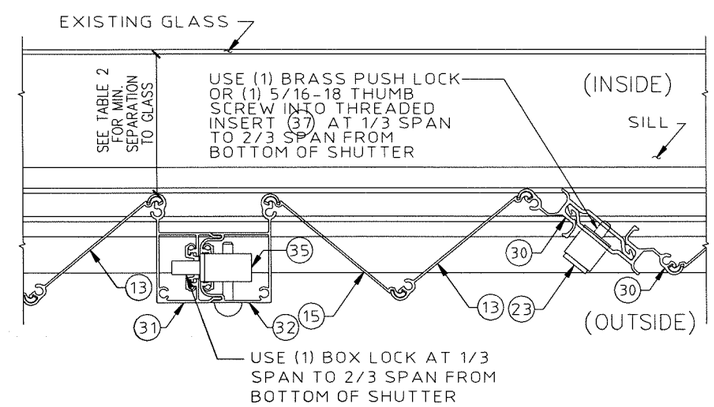

MULTIPLE SHUTTER ASSEMBLY
SCALE: 3" = 1'-0"

FRANK L. BENNARDO
PE 96064
STATE OF TEXAS
09/06/2019
FRANK L. BENNARDO
FRANK L. BENNARDO, P.E.
96064
VALID FOR 2 DIGITAL ONLY U.NO.
NOTICE: IF THIS SHEET DOES NOT CONTAIN AN ORIGINAL SIGNATURE & ENGINEER SEAL, IT MAY BE A DIGITAL SIGNATURE (ON SHEET 1), THIS SHEET IS PART OF A DIGITALLY SIGNED FILE, SHALL REMAIN IN DIGITAL FORMAT, & PRINTED COPIES OF THIS DOCUMENT ARE NOT CONSIDERED SIGNED AND SEALED. IF THERE IS NO DIGITAL SIGNATURE ON SHEET 1 OR THIS SHEET DOES NOT CONTAIN AN ENGINEER'S ORIGINAL SIGNATURE & SEAL, THIS SHEET IS A COPY/DRAFT.

ENGINEERING EXPRESS®
CORPORATE OFFICE:
160 SW 12th AVE, SUITE 106
DEERFIELD BEACH, FL 33442
P: (954) 354-0660 F: (954) 354-0443
E: HELLO@ENGINEERINGEXPRESS.COM
ENGINEERINGEXPRESS.COM
CERT OF AUTH #F-11383

TOWN & COUNTRY INDUSTRIES
400 WEST McNAB ROAD
FT. LAUDERDALE, FL 33309
(954) 970-9999

6.8 ACCORDION SHUTTER
TEXAS DEARTMENT OF INSURANCE
INTERNATIONAL BUILDING CODE

REMARKS	DRWN	CHKD	DATE
INIT ISSUE	RWN	FLB	05/24/18

THIS DOCUMENT IS THE PROPERTY OF ENGINEERING EXPRESS, AND SHALL NOT BE REPRODUCED IN WHOLE OR IN PART WITHOUT WRITTEN CONSENT OF ENGINEERING EXPRESS. ALTERATIONS, ADDITIONS, OR OTHER MARKINGS TO THIS DOCUMENT ARE NOT PERMITTED AND INVALIDATE OUR CERTIFICATION.
COPYRIGHT ENGINEERING EXPRESS®

15-2338

SCALE: NTS UNLESS NOTED

V:\projects\15-2338 6.8 Accordion Shutter - FSA - Update FL13757.1 for 2014 Florida Bldg Cod-Project\WP\TDI Submittal\15-2338d-Dwg-TDI.dwg
09/06/2019 - 9:31am rickn

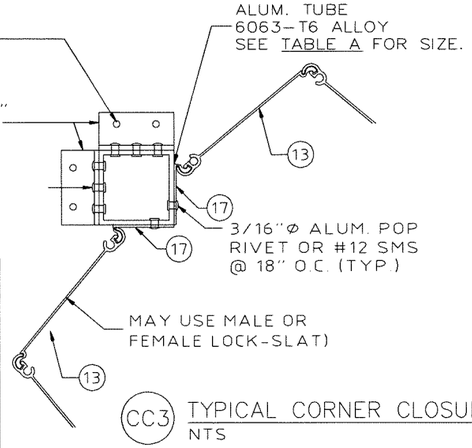

CC3 TYPICAL CORNER CLOSURE DETAILS
NTS

TABLE A (CC3)		
PRESSURE VS ALLOWABLE LENGTH		
PSF	2"x2"x1/8" No B/O	3"x3"x1/8" No B/O
62	130"	188"
72	124"	179"
82	119"	172"
92	114"	165"
102	110"	160"
120	104"	147"
150	97"	131"
200	88"	114"

TABLE B (CC4)		
PRESSURE VS ALLOWABLE LENGTH		
PSF	2"x2"x1/8" WITH B/O	3"x3"x1/8" WITH B/O
62	113"	166"
72	107"	157"
82	101"	147"
92	95"	139"
102	90"	132"
120	83"	122"
150	74"	109"
200	64"	94"

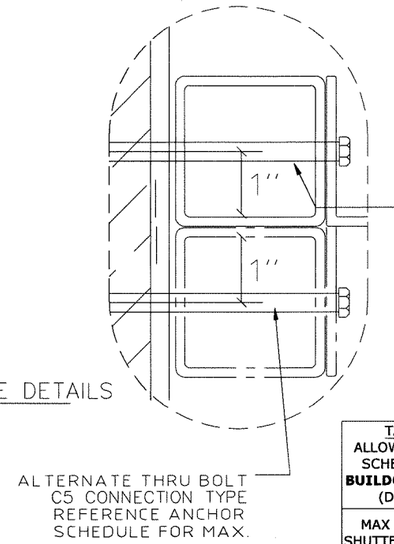

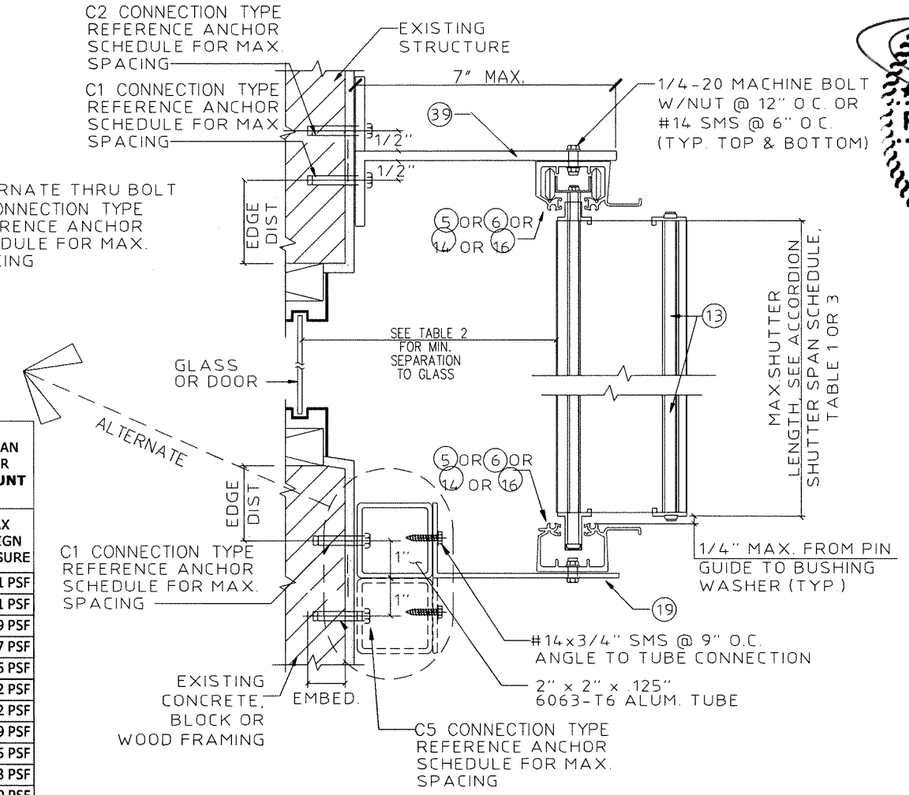

Cb ALTERNATE BUILD OUT MOUNT SECTION
SCALE : 3"= 1'- 0"

TABLE C: ALLOWABLE SPAN SCHEDULE FOR **BUILDOUT MOUNT** (DETAIL F)	
MAX SHUTTER SPAN	MAX DESIGN PRESSURE
125 IN.	+/-30.1 PSF
121 IN.	+/-31.1 PSF
118 IN.	+/-31.9 PSF
115 IN.	+/-32.7 PSF
112 IN.	+/-33.6 PSF
110 IN.	+/-34.2 PSF
107 IN.	+/-35.2 PSF
105 IN.	+/-35.9 PSF
103 IN.	+/-36.5 PSF
101 IN.	+/-37.3 PSF
99 IN.	+/-38.0 PSF
95 IN.	+/-39.6 PSF
92 IN.	+/-40.9 PSF
89 IN.	+/-42.3 PSF
86 IN.	+/-43.8 PSF
83 IN.	+/-45.4 PSF
81 IN.	+/-46.5 PSF
78 IN.	+/-48.3 PSF
76 IN.	+/-49.5 PSF
74 IN.	+/-50.9 PSF
72 IN.	+/-52.3 PSF
70 IN.	+/-53.8 PSF
68 IN.	+/-55.4 PSF
66 IN.	+/-57.0 PSF

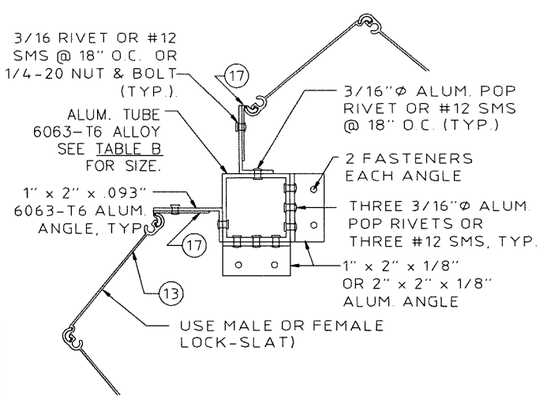

CC4 TYPICAL CORNER CLOSURE DETAILS
NTS

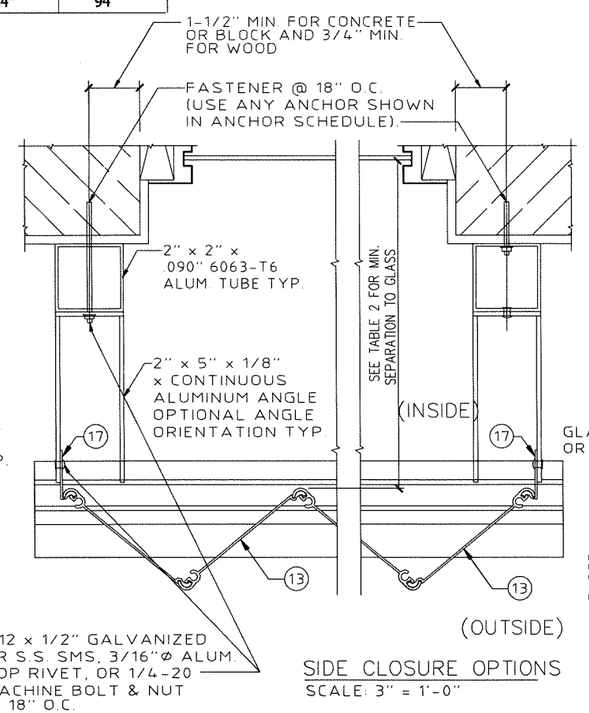

SIDE CLOSURE OPTIONS
SCALE: 3" = 1'-0"

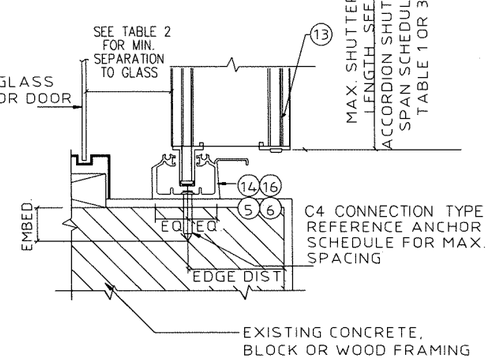

EE INSIDE SILL MOUNT SECTION
SCALE : 3"= 1'- 0"

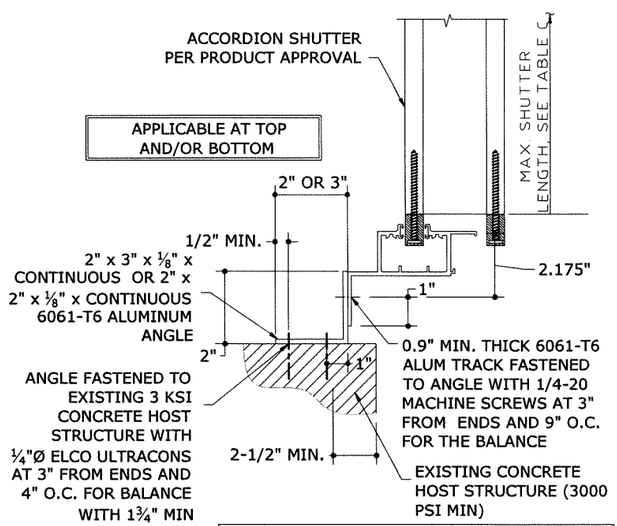

F BUILDOUT MOUNT
SCALE : NTS

FRANK L. PENNARDO, P.E.
PE# 42604
STATE OF TEXAS
09/06/2019
FRANK L. PENNARDO
THIS SEAL CERTIFIES THE APPEARANCE OF THE SEALED DOCUMENT ONLY.
96064
VALID FOR PERMIT ONLY U.N.O.
NOTICE: IF THIS SHEET DOES NOT CONTAIN AN ORIGINAL SIGNATURE & ENGINEER SEAL, WHERE AS A DIGITAL SIGNATURE ON SHEET 1 OF THIS SHEET IS PART OF A DIGITALLY SIGNED FILE, SHALL REMAIN IN DIGITAL FORMAT, & PRINTED COPIES OF THIS DOCUMENT ARE NOT CONSIDERED SIGNED AND SEALED. IF THERE IS NO DIGITAL SIGNATURE ON SHEET 1 OR THIS SHEET DOES NOT CONTAIN AN ENGINEER'S ORIGINAL SIGNATURE & SEAL, THIS SHEET IS A COPY/DRAFT.

ENGINEERING EXPRESS®
CORPORATE OFFICE:
160 SW 12th AVE, SUITE 106
DEERFIELD BEACH, FL 33442
P: (954) 354-0660 F: (954) 354-0443
E: HELLO@ENGINEERINGEXPRESS.COM
ENGINEERINGEXPRESS.COM
CERT OF AUTH #F-11383

TOWN & COUNTRY INDUSTRIES
400 WEST McNAB ROAD
FT. LAUDERDALE, FL 33309
(954) 970-9999

6.8 ACCORDION SHUTTER
TEXAS DEARTMENT OF INSURANCE
INTERNATIONAL BUILDING CODE

REMARKS	DRWN	CHKD	DATE
INIT ISSUE	RWN	FLB	05/24/18
-	-	-	-
-	-	-	-
-	-	-	-
-	-	-	-

THIS DOCUMENT IS THE PROPERTY OF ENGINEERING EXPRESS, AND MAY NOT BE REPRODUCED IN WHOLE OR IN PART WITHOUT WRITTEN CONSENT OF ENGINEERING EXPRESS. ALTERATIONS, ADDITIONS, OR OTHER MARKINGS TO THIS DOCUMENT ARE NOT PERMITTED AND INVALIDATE OUR CERTIFICATION.
COPYRIGHT ENGINEERING EXPRESS®

15-2338

SCALE: NTS UNLESS NOTED

V:\projects\15-2338 6.8 Accordion Shutter - FSA - Update FL13757.1 for 2014 Florida Bldg Cod-Project\WP\TDI Submittal\15-2338d-Dwg-TDI.dwg
09/06/2019 - 9:32am rickn

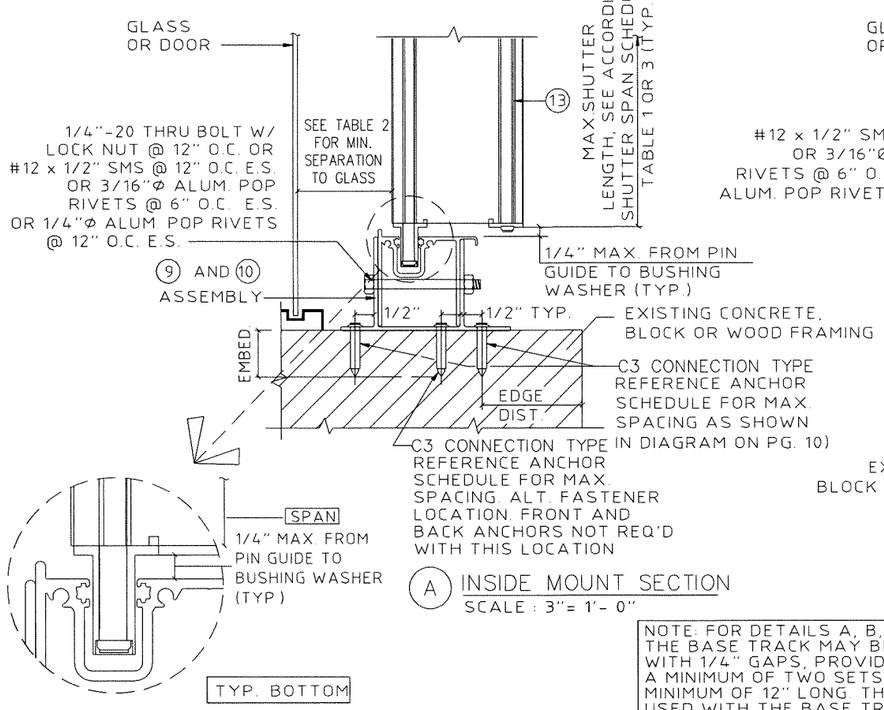

A INSIDE MOUNT SECTION
SCALE : 3"= 1'- 0"

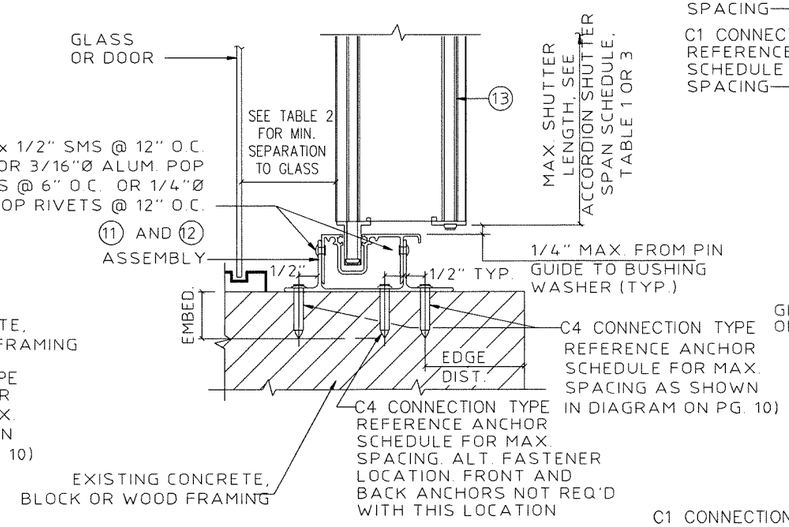

B INSIDE MOUNT SECTION
SCALE : 3"= 1'- 0"

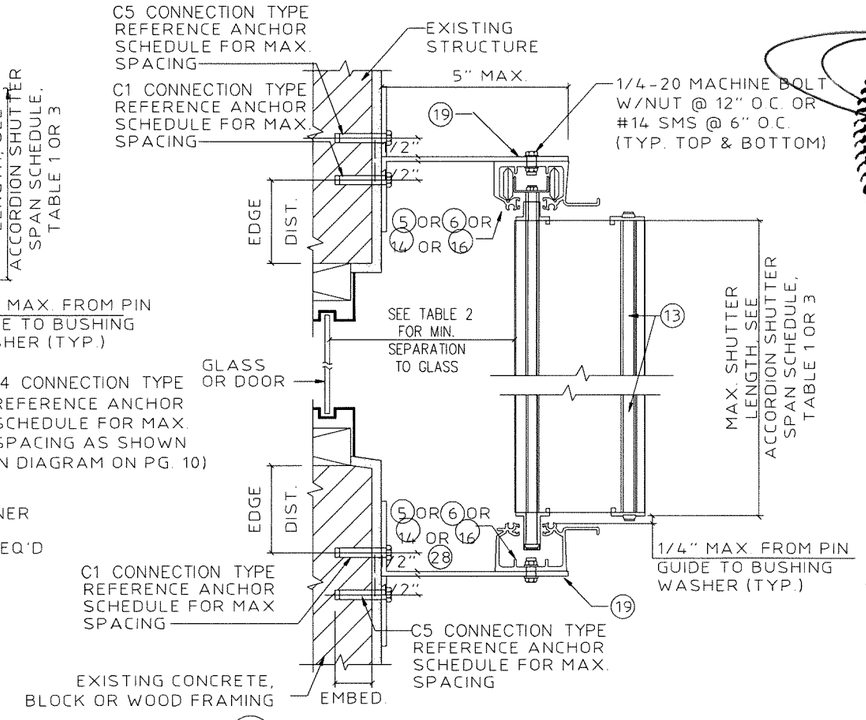

Ca BUILD OUT MOUNT SECTION
SCALE : 3"= 1'- 0"

NOTE: FOR DETAILS A, B, D, AND E ON THIS SHEET, THE BASE TRACK MAY BE INSTALLED IN SECTIONS WITH 1/4" GAPS, PROVIDED THAT EACH SECTION HAS A MINIMUM OF TWO SETS OF ANCHORS AND IS A MINIMUM OF 12" LONG. THE SILL OR CEILING TRACK USED WITH THE BASE TRACK MUST BE CONTINUOUS OVER THE GAPS BETWEEN SECTIONS.

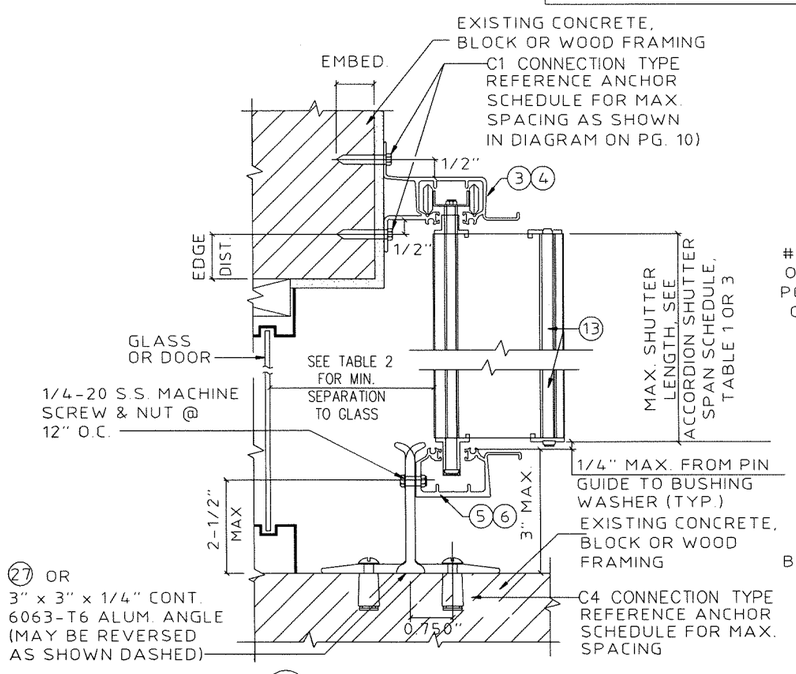

D WALL MOUNT SECTION
SCALE : 3"= 1'- 0"

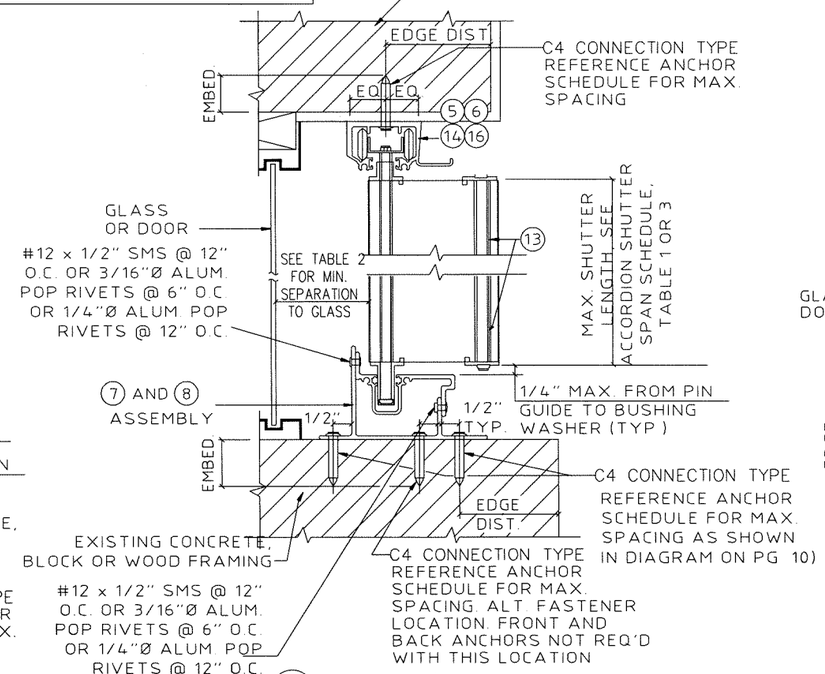

E CEILING / INSIDE MOUNT SECTION
SCALE : 3"= 1'- 0"

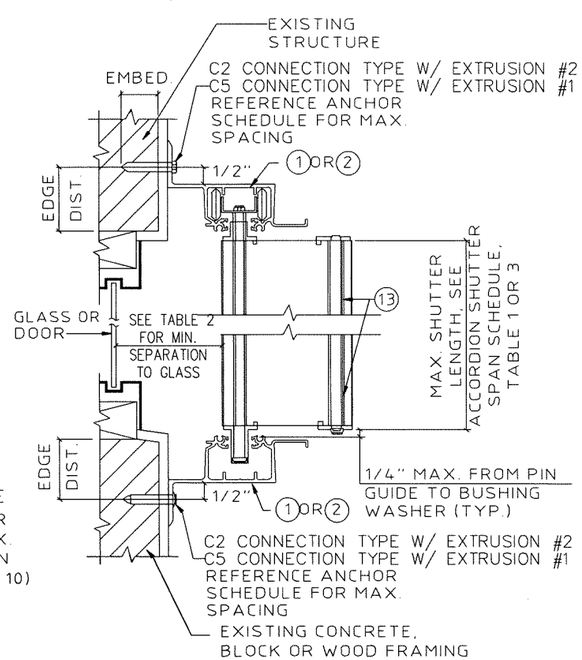

F WALL/BUILD OUT SECTION
SCALE : 3"= 1'- 0"

FRANK L. BENNARDO
PE# 9606
STATE OF TEXAS
09/06/2019
THIS DOCUMENT PERTAINING P.E. ARCHES BELOW WAS SIGNED BY FRANK L. BENNARDO 06064
VALID FOR 1 PERMIT ONLY NO. **NOTICE: IF THIS SHEET DOES NOT CONTAIN AN ORIGINAL SIGNATURE & ENGINEER SEAL, IF THERE IS A DIGITAL SIGNATURE ON SHEET 1, THIS SHEET IS PART OF A DIGITALLY SIGNED FILE, SHALL REMAIN IN DIGITAL FORMAT, & PRINTED COPIES OF THIS DOCUMENT ARE NOT CONSIDERED SIGNED AND SEALED.** IF THERE IS NO DIGITAL SIGNATURE ON SHEET 1 OR THIS SHEET DOES NOT CONTAIN AN ENGINEER'S ORIGINAL SIGNATURE & SEAL, THIS SHEET IS A COPY/DRAFT.

ENGINEERING EXPRESS®
CORPORATE OFFICE:
160 SW 12th AVE, SUITE 106
DEERFIELD BEACH, FL 33442
P: (954) 354-0660 F: (954) 354-0443
E: HELLO@ENGINEERINGEXPRESS.COM
ENGINEERINGEXPRESS.COM
CERT OF AUTH #F-11383

TOWN & COUNTRY INDUSTRIES
400 WEST McNAB ROAD
FT. LAUDERDALE, FL 33309
(954) 970-9999

6.8 ACCORDION SHUTTER
TEXAS DEARTMENT OF INSURANCE
INTERNATIONAL BUILDING CODE

REMARKS	DRWN	CHKD	DATE
INIT ISSUE	RWN	FLB	05/24/18

THIS DOCUMENT IS THE PROPERTY OF ENGINEERING EXPRESS, AND MAY NOT BE REPRODUCED IN WHOLE OR IN PART WITHOUT WRITTEN CONSENT OF ENGINEERING EXPRESS. ALTERATIONS, ADDITIONS, OR OTHER MARKINGS TO THIS DOCUMENT ARE NOT PERMITTED AND INVALIDATE OUR CERTIFICATION.
COPYRIGHT ENGINEERING EXPRESS®

15-2338

SCALE: NTS UNLESS NOTED

09/06/2019 - 9:32am rickn V:\projects\15-2338 6.8 Accordion Shutter - FSA - Update FL13757.1 for 2014 Florida Bldg Cod-Project\WP\TDI Submittal\15-2338d-Dwg-TDI.dwg

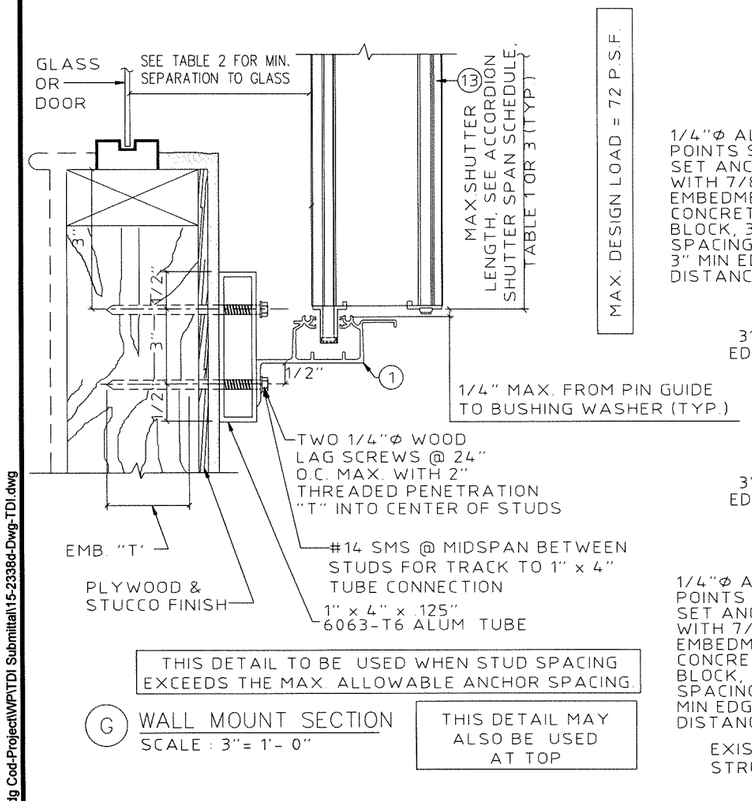

THIS DETAIL TO BE USED WHEN STUD SPACING EXCEEDS THE MAX. ALLOWABLE ANCHOR SPACING

THIS DETAIL MAY ALSO BE USED AT TOP

G WALL MOUNT SECTION
SCALE : 3"= 1'- 0"

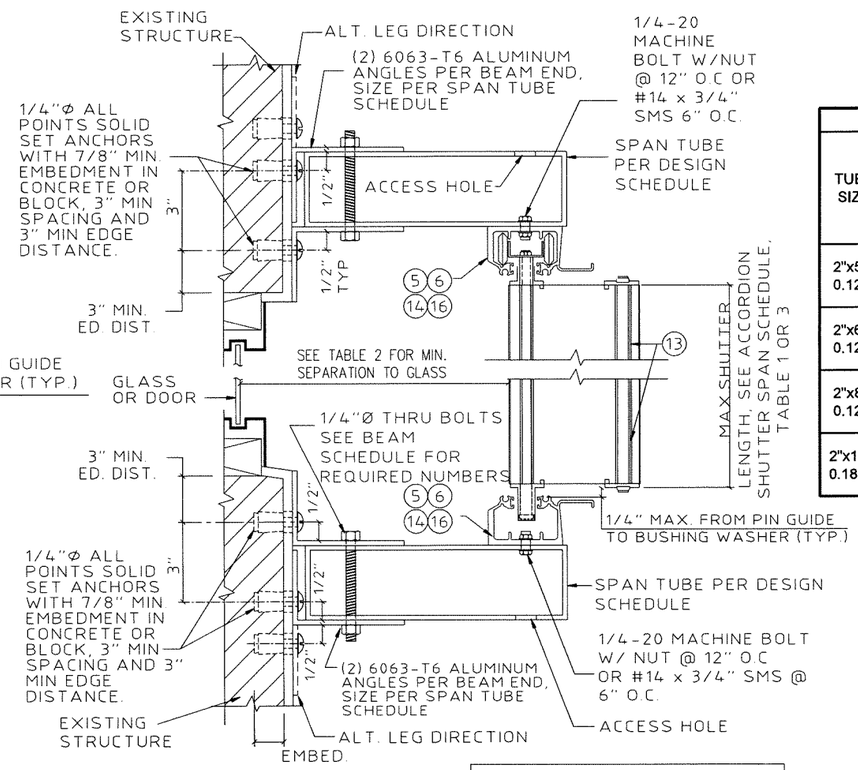

MAX. DESIGN LOAD = ± 72 PSF

J BEAM SPAN SECTION
SCALE : 3"= 1'- 0"

SPAN TUBE SCHEDULE									
TUBE SIZE	SHUTTER SPAN	ALLOWABLE TUBE SPAN		NUMBER OF THRU-BOLTS		NUMBER OF ANCHORS PER ANGLE		MINIMUM ANGLE LENGTH	
		TOP TUBE	BOTTOM TUBE	TOP TUBE	BOTTOM TUBE	TOP TUBE	BOTTOM TUBE	TOP TUBE	BOTTOM TUBE
2"x5"x 0.125"	60"	123.8"	135.2"	2	2	2	3	4"	7"
	96"	101.7"	106.9"	2	2	3	3	7"	7"
	123"	89.9"	94.4"	2	2	3	3	7"	7"
2"x6"x 0.125"	60"	129.1"	157.0"	2	2	2	3	4"	7"
	96"	114.8"	124.1"	2	2	3	3	7"	7"
	123"	102.8"	109.6"	2	2	4	4	10"	10"
2"x8"x 0.125"	60"	138.0"	196.9"	2	2	3	3	7"	7"
	96"	122.7"	155.7"	2	2	3	4	7"	10"
	123"	115.4"	137.5"	2	3	4	5	10"	13"
2"x10"x 0.1875"	60"	158.1"	240.0"	2	2	3	4	7"	10"
	96"	140.6"	229.9"	2	3	4	6	10"	16"
	123"	132.2"	203.1"	3	4	5	7	13"	19"

SPAN TUBE SCHEDULE NOTES:

1. USE 2"x3"x1/4" OR 2"x5"x1/4" ANGLES FOR 2"x5" & 2"x6" BEAMS.
2. USE 2"x5"x1/4" ANGLES FOR 2"x8" & 2"x10" BEAMS.
3. USE BEAM SCHEDULE FOR DETAIL J.
4. TOP & BOTTOM BEAMS MAY BE USED TOGETHER OR IN COMBINATION WITH OTHER CONNECTION DETAILS. WHERE USED TOGETHER, BEAM MUST BE LIMITED TO TOP BEAM SPANS.
5. SPAN TUBES MAY BE USED IN A MID-SPAN CONDITION WITH SHUTTERS SPANNING ABOVE AND BELOW THE BEAM. MID-SPAN TUBES SHALL HAVE TOP BEAM LIMITATIONS (INCLUDING SPANS, ANCHORS, ANGLES AND BOLTS), WITH THE SHUTTER SPAN TAKEN AS THE SUM OF THE SPANS ABOVE AND BELOW THE BEAM.
6. LAP BEAMS ARE NOT ALLOWED.
7. ALL BEAMS AND ANGLES TO BE 6063-T6 ALUMINUM.

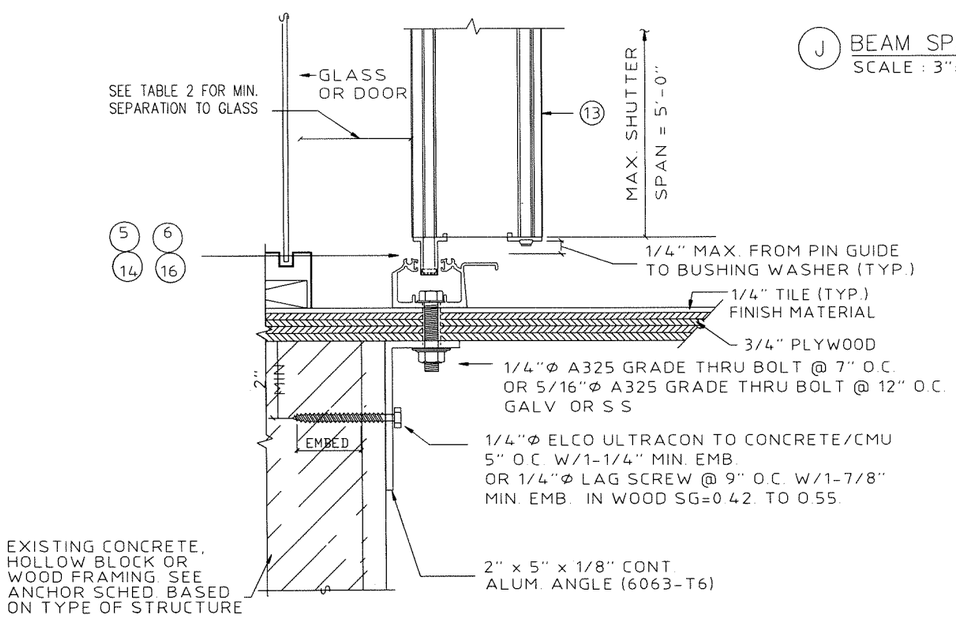

(MAX. DESIGN LOAD ± 72 P.S.F.)

H PASS THRU DETAIL
SCALE : 3"= 1'- 0"

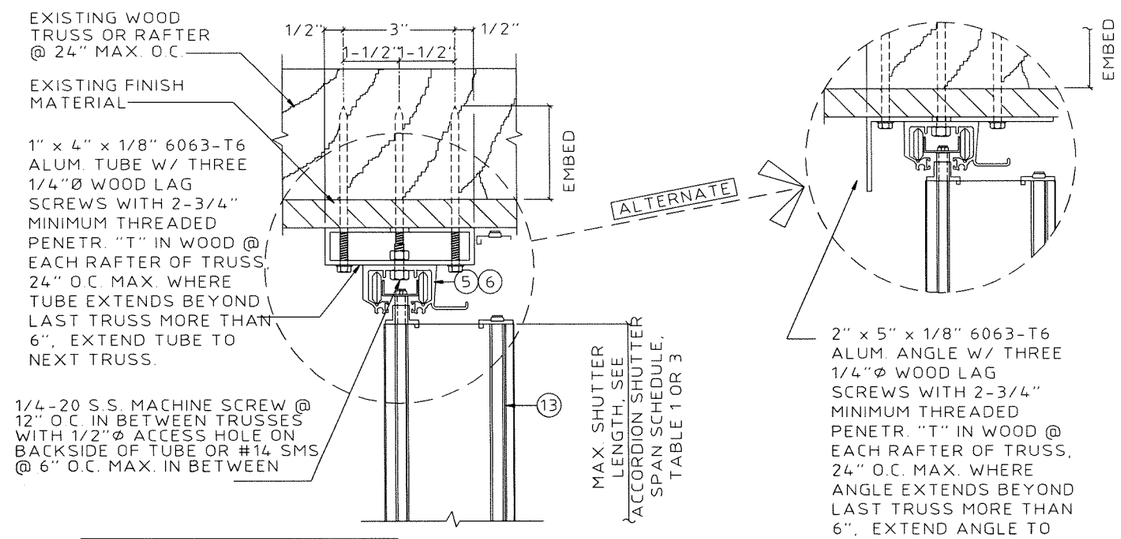

(MAX. DESIGN LOAD ± 72 P.S.F.)

K TRUSS MOUNT SECTION
SCALE : 3"= 1'- 0"

FRANK L. BENNARDO, P.E.
PE # 96064
STATE OF TEXAS
09/06/2019
FRANK L. BENNARDO
LICENSED TO PRACTICE ENGINEERING IN FLORIDA
FRANK L. BENNARDO, P.E.
96064
VALID FOR 1 PERMIT ONLY U.N.O.
NOTE: IF THIS SHEET DOES NOT CONTAIN AN ORIGINAL SIGNATURE & ENGINEER SEAL IF THERE IS NO DIGITAL SIGNATURE ON SHEET 1, THIS SHEET IS PART OF A DIGITALLY SIGNED FILE, SHALL REMAIN IN DIGITAL FORMAT, & **PRINTED COPIES OF THIS DOCUMENT ARE NOT CONSIDERED SIGNED AND SEALED.** IF THERE IS NO DIGITAL SIGNATURE ON SHEET 1 OR THIS SHEET DOES NOT CONTAIN AN ENGINEER'S ORIGINAL SIGNATURE & SEAL, THIS SHEET IS A COPY/DRAFT.

ENGINEERING EXPRESS®
CORPORATE OFFICE:
160 SW 12th AVE, SUITE 106
DEERFIELD BEACH, FL 33442
P: (954) 354-0660 F: (954) 354-0443
E: HELLO@ENGINEERINGEXPRESS.COM
ENGINEERINGEXPRESS.COM
CERT OF AUTH #F-11383

TOWN & COUNTRY INDUSTRIES
400 WEST McNAB ROAD
FT. LAUDERDALE, FL 33309
(954) 970-9999

6.8 ACCORDION SHUTTER
TEXAS DEARTMENT OF INSURANCE
INTERNATIONAL BUILDING CODE

REMARKS	DRWN	CHKD	DATE
INIT ISSUE	RWN	FLB	05/24/18

THIS DOCUMENT IS THE PROPERTY OF ENGINEERING EXPRESS, AND SHALL NOT BE REPRODUCED IN WHOLE OR PART WITHOUT WRITTEN CONSENT OF ENGINEERING EXPRESS. ALTERATIONS, ADDITIONS, OR OTHER MARKINGS TO THIS DOCUMENT ARE NOT PERMITTED AND INVALIDATE OUR CERTIFICATION.

COPYRIGHT ENGINEERING EXPRESS®

15-2338

SCALE: NTS UNLESS NOTED

8 OF 12

09/06/2019 - 9:32am rickn V:\projects\15-2338 6.8 Accordion Shutter - FSA - Update FL13757.1 for 2014 Florida Bldg Cod-Project\WP\TDI Submittal\15-2338d-Dwg-TDI.dwg

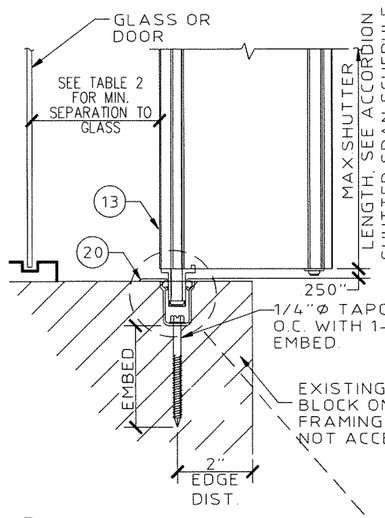

M RECESS SILL DETAIL
SCALE : 3"= 1'- 0"

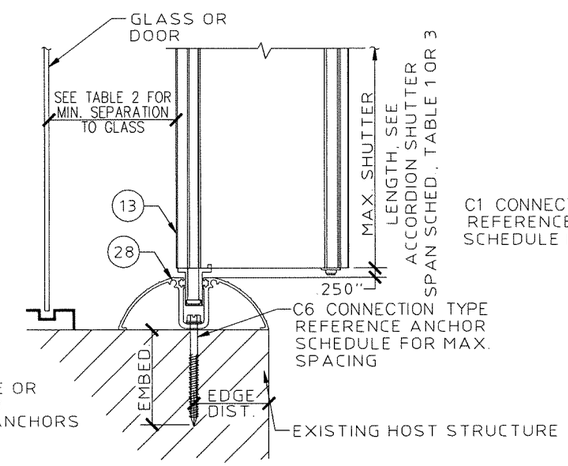

N DECORATIVE FLOOR TRACK DETAIL
SCALE : 3"= 1'- 0"

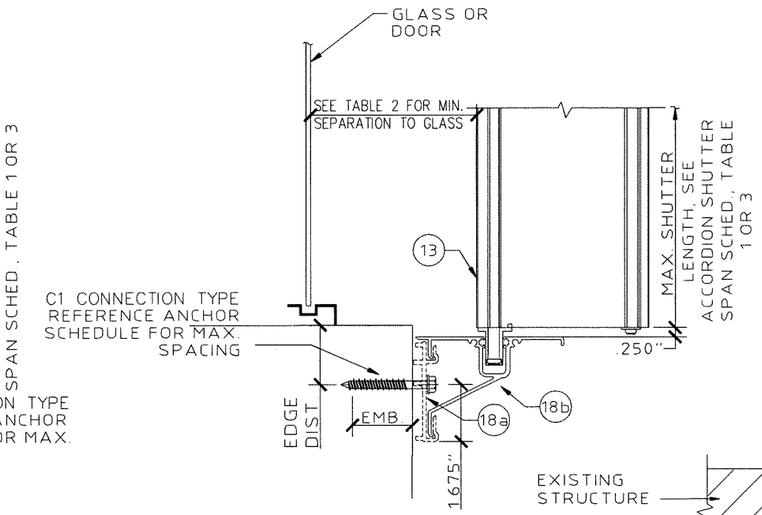

O WALL MOUNT SILL DETAIL
SCALE : 3"= 1'- 0"

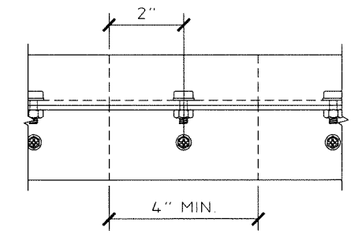

RADIUS HEADER MOUNTED PARTIAL ELEVATION
SCALE: 3" = 1'-0"

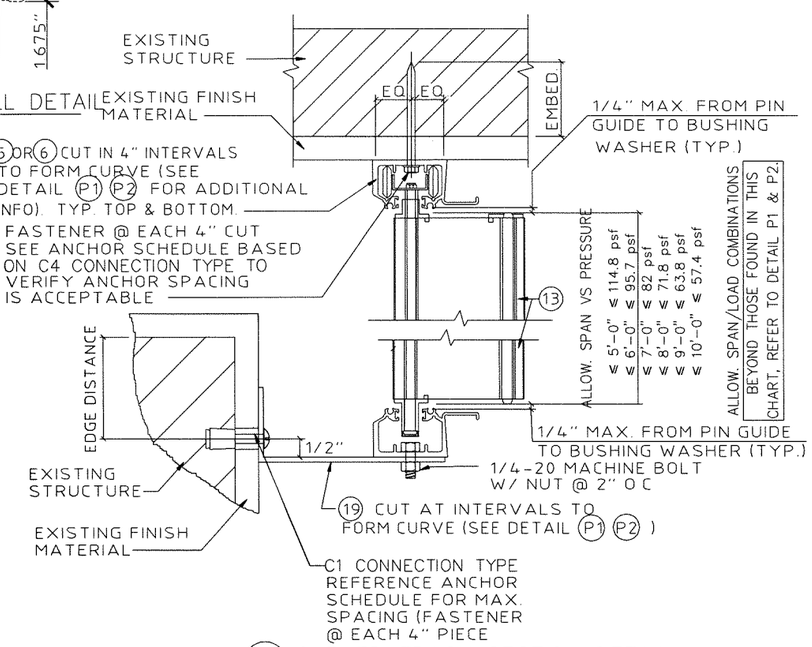

P CURVED TRACK SECTION DETAIL
SCALE : 3"= 1'- 0"

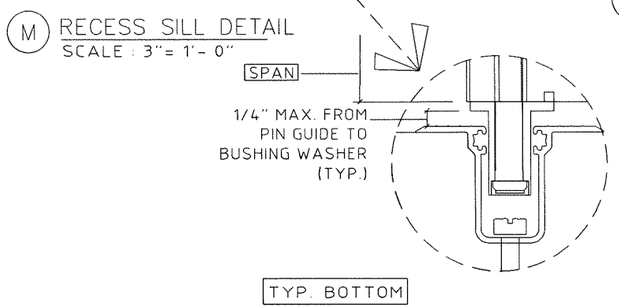

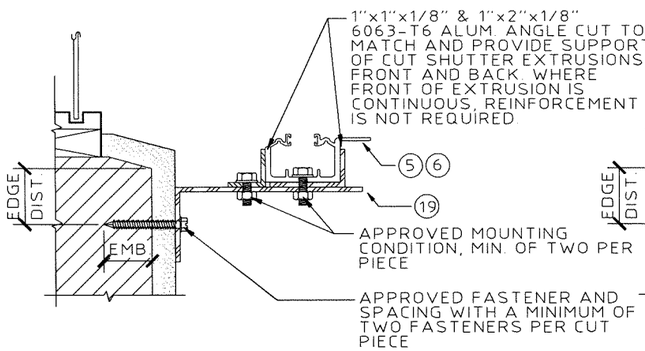

P1 TYP. SECTION FOR SHUTTERS
SCALE: 3" = 1'-0"

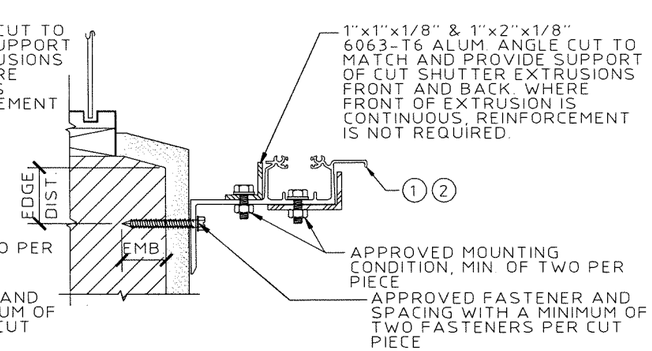

P2 TYP. ALTERNATE SECTION FOR SHUTTERS
SCALE: 3" = 1'-0"

FRANK L. BENNARDO, P.E.
PE-56064
STATE OF TEXAS
09/06/2019
FRANK L. BENNARDO
PE-56064
THIS DOCUMENT IS ITEM(S) SEALED BY FRANK L. BENNARDO, P.E. PE-56064.
VALID FOR 1 PERMIT ONLY U.N.O.
NOTICE: IF THIS SHEET DOES NOT CONTAIN AN ORIGINAL SIGNATURE & ENGINEER SEAL, THIS IS A COPY/DRAFT. IF THERE IS A DIGITAL SIGNATURE ON SHEET 1 OF THIS SHEET IS PART OF A DIGITALLY SIGNED FILE, SHALL REMAIN IN DIGITAL FORMAT, & **PRINTED COPIES OF THIS DOCUMENT ARE NOT CONSIDERED SIGNED AND SEALED.** IF THERE IS NO DIGITAL SIGNATURE ON SHEET 1 OR THIS SHEET DOES NOT CONTAIN AN ENGINEER'S ORIGINAL SIGNATURE & SEAL, THIS SHEET IS A COPY/DRAFT.

ENGINEERING EXPRESS®
CORPORATE OFFICE:
160 SW 12th AVE, SUITE 106
DEERFIELD BEACH, FL 33442
P: (954) 354-0660 F: (954) 354-0443
E: HELLO@ENGINEERINGEXPRESS.COM
ENGINEERINGEXPRESS.COM
CERT OF AUTH #F-11383

TOWN & COUNTRY INDUSTRIES
400 WEST McNAB ROAD
FT. LAUDERDALE, FL 33309
(954) 970-9999

6.8 ACCORDION SHUTTER
TEXAS DEARTMENT OF INSURANCE
INTERNATIONAL BUILDING CODE

REMARKS	DRWN	CHKD	DATE
INIT ISSUE	RWN	FLB	05/24/18
-	-	-	-
-	-	-	-
-	-	-	-
-	-	-	-

THIS DOCUMENT IS THE PROPERTY OF ENGINEERING EXPRESS, AND SHALL NOT BE REPRODUCED IN WHOLE OR PART WITHOUT WRITTEN CONSENT OF ENGINEERING EXPRESS. ALTERATIONS, ADDITIONS, OR OTHER MARKINGS TO THIS DOCUMENT ARE NOT PERMITTED AND INVALIDATE OUR CERTIFICATION.
COPYRIGHT ENGINEERING EXPRESS®

15-2338

SCALE: NTS UNLESS NOTED

09/06/2019 - 9:32am rickn V:\projects\15-2338 6.8 Accordion Shutter - FSA - Update FL13757.1 for 2014 Florida Bldg Cod-Project\WP\TDI Submittal\15-2338d-Dwg-TDI.dwg

ANCHOR SCHEDULE: CONCRETE

HOST STRUCT.	ANCHOR	LOAD (psf)	Spans Up To 6'-0" CONN TYPE						Spans Up To 8'-8" CONN TYPE						Spans Up To 13'-0" CONN TYPE					
			C1	C2	C3	C4	C5	C6	C1	C2	C3	C4	C5	C6	C1	C2	C3	C4	C5	C6
			2.5" MIN EDGE DISTANCE																	
CONCRETE	1/4" ITW TAPCON OR ELCO ULTRACON WITH 1-3/4" EMBED (3192psi MIN CONC)	48	16.0"	16.0"	16.0"	16.0"	16.0"	16.0"	16.0"	16.0"	10.5"	10.0"	16.0"	13.0"	15.5"	16.0"	6.5"	6.0"	9.5"	9.0"
		62	16.0"	16.0"	12.5"	12.0"	16.0"	14.5"	16.0"	16.0"	8.0"	7.0"	13.0"	10.0"	11.0"	10.0"	5.0"	4.0"	6.0"	7.0"
		72	16.0"	16.0"	10.0"	9.5"	16.0"	12.5"	15.5"	16.0"	6.5"	6.0"	9.5"	9.0"	9.0"	8.0"	4.0"		5.0"	6.0"
		110	14.5"	14.5"	6.0"	5.5"	8.5"	8.5"	9.0"	7.5"	4.0"		4.5"	6.0"	7.5"	6.0"				5.0"
		200	7.5"	6.0"				5.0"	7.5"	6.0"				5.0"	7.5"	6.0"				5.0"
	1/4" MILLENIUM MILLFAST WITH 1-3/4" EMBED (3275psi MIN CONCRETE)	48	16.0"	16.0"	16.0"	16.0"	16.0"	16.0"	16.0"	16.0"	11.0"	10.5"	16.0"	14.0"	14.5"	14.5"	6.5"	6.0"	9.0"	9.5"
		62	16.0"	16.0"	13.0"	12.0"	16.0"	15.5"	16.0"	16.0"	8.0"	7.0"	12.0"	11.0"	10.0"	9.0"	5.0"	4.0"	5.5"	7.5"
		72	16.0"	16.0"	10.5"	9.5"	16.0"	13.5"	14.5"	14.5"	6.5"	6.0"	9.0"	9.5"	8.5"	7.0"	4.0"		4.5"	6.5"
		110	13.0"	13.0"	6.0"	5.5"	8.0"	9.0"	8.0"	7.0"	4.0"		4.5"	6.0"	6.5"	5.5"				5.5"
		200	6.5"	5.5"				5.5"	6.5"	5.5"				5.5"	6.5"	5.5"				5.5"
	1/4" ELCO CRETEFLEX SS4 W/ 2" EMBED (3350psi MIN CONC)	48	16.0"	16.0"	16.0"	16.0"	16.0"	16.0"	16.0"	16.0"	16.0"	15.0"	16.0"	16.0"	16.0"	16.0"	10.0"	8.5"	12.5"	14.0"
		62	16.0"	16.0"	16.0"	16.0"	16.0"	16.0"	16.0"	16.0"	12.0"	10.5"	16.0"	16.0"	14.5"	13.5"	7.0"	6.5"	8.0"	11.0"
		72	16.0"	16.0"	15.5"	14.5"	16.0"	16.0"	16.0"	16.0"	10.0"	8.5"	12.5"	14.0"	12.0"	10.5"	6.0"	5.0"	6.5"	9.5"
		110	16.0"	16.0"	9.0"	8.0"	11.5"	13.0"	12.0"	10.0"	6.0"	5.0"	6.0"	9.0"	10.0"	8.0"	5.0"	4.0"	5.0"	8.0"
		200	10.0"	8.0"	5.0"	4.0"	5.0"	8.0"	10.0"	8.0"	5.0"	4.0"	5.0"	8.0"	10.0"	8.0"	5.0"	4.0"	5.0"	8.0"
			1" MIN EDGE DISTANCE																	
			C1	C2	C3	C4	C5	C6	C1	C2	C3	C4	C5	C6	C1	C2	C3	C4	C5	C6
	1/4" ITW TAPCON OR ELCO ULTRACON WITH 1-3/4" EMBED (3192psi MIN CONC) BED (3192psi MIN CONC)	48	16.0"	16.0"	7.5"	7.5"	16.0"	7.5"	16.0"	16.0"	5.0"	4.5"	16.0"	5.5"	15.0"	15.5"			9.5"	
		62	16.0"	16.0"	5.5"	5.5"	16.0"	6.0"	16.0"	16.0"			12.5"	4.0"	10.5"	9.5"			6.0"	
		72	16.0"	16.0"	4.5"	4.5"	16.0"	5.0"	15.0"	15.5"			9.5"		9.0"	7.5"			4.5"	
		110	14.0"	14.0"			8.5"		8.5"	7.5"			4.5"		7.0"	6.0"				
		200	7.0"	6.0"					7.0"	6.0"					7.0"	6.0"				
	1/4" MILLENIUM MILLFAST WITH 1-3/4" EMBED (3275psi MIN CONCRETE)	48	16.0"	16.0"	13.0"	13.0"	16.0"	13.5"	16.0"	16.0"	8.0"	7.5"	16.0"	9.5"	11.5"	11.5"	4.5"	4.0"	7.0"	6.5"
		62	16.0"	16.0"	9.0"	8.5"	16.0"	10.5"	14.0"	15.0"	5.5"	5.0"	9.5"	7.5"	8.0"	7.5"			4.5"	5.0"
		72	16.0"	16.0"	7.5"	7.0"	16.0"	9.5"	11.5"	11.5"	4.5"	4.0"	7.0"	6.5"	6.5"	5.5"				4.5"
		110	10.5"	10.5"	4.5"	4.0"	6.0"	6.0"	6.5"	5.5"				4.0"	5.5"	4.5"				
		200	5.5"	4.5"					5.5"	4.5"					5.5"	4.5"				
			1-1/4" MIN EDGE DISTANCE																	
			C1	C2	C3	C4	C5	C6	C1	C2	C3	C4	C5	C6	C1	C2	C3	C4	C5	C6
	1/4" ALL-POINTS SOLID-SET ANCHOR W/ 7/8" EMBED & 1/4-20 SS MACHINE SCREW (3000psi MIN CONC) *	48	16.0"	16.0"	9.5"	9.5"	16.0"	10.0"	16.0"	16.0"	6.0"	5.5"	16.0"	7.0"	10.5"	11.0"	3.5"	3.5"	6.5"	4.5"
		62	16.0"	16.0"	7.0"	6.5"	16.0"	8.0"	13.5"	14.5"	4.5"	4.0"	9.0"	5.5"	7.5"	7.0"			4.0"	3.5"
		72	16.0"	16.0"	5.5"	5.5"	16.0"	7.0"	10.5"	11.0"	3.5"	3.5"	6.5"	4.5"	6.0"	5.5"			3.0"	3.0"
		110	10.0"	10.0"	3.5"	3.0"	6.0"	4.5"	6.0"	5.0"			3.0"	3.0"	5.0"	4.0"				
		200	5.0"	4.0"					5.0"	4.0"					5.0"	4.0"				
			3" MIN EDGE DISTANCE																	
			C1	C2	C3	C4	C5	C6	C1	C2	C3	C4	C5	C6	C1	C2	C3	C4	C5	C6
	1/4" ALL-POINTS SOLID-SET ANCHOR W/ 7/8" EMBED & 1/4-20 SS MACHINE SCREW (3000psi MIN CONC) *	48	16.0"	16.0"	16.0"	16.0"	16.0"	16.0"	16.0"	16.0"	14.0"	13.0"	16.0"	16.0"	16.0"	16.0"	8.5"	7.5"	11.0"	12.0"
		62	16.0"	16.0"	16.0"	15.0"	16.0"	16.0"	16.0"	16.0"	10.0"	9.0"	15.0"	13.5"	12.5"	11.5"	6.0"	5.5"	7.0"	9.0"
		72	16.0"	16.0"	13.0"	12.0"	16.0"	16.0"	16.0"	16.0"	8.5"	7.5"	11.0"	12.0"	10.5"	9.0"	5.0"	4.5"	5.5"	8.0"
		110	16.0"	16.0"	8.0"	7.0"	10.0"	11.0"	10.5"	9.0"	5.0"	4.5"	5.5"	8.0"	8.5"	7.0"	4.0"	3.5"	4.5"	6.5"
		200	8.5"	7.0"	4.0"	3.5"	4.5"	6.5"	8.5"	7.0"	4.0"	3.5"	4.5"	6.5"	8.5"	7.0"	4.0"	3.5"	4.5"	6.5"
			2-5/8" MIN EDGE DISTANCE																	
			C1	C2	C3	C4	C5	C6	C1	C2	C3	C4	C5	C6	C1	C2	C3	C4	C5	C6
	1/4" POWERS SS DROP-IN W/ 1/4-20 SS BOLT AND 1" EMBED (3000psi MIN CONC) *	48	16.0"	16.0"	16.0"	16.0"	16.0"	16.0"	16.0"	16.0"	10.0"	9.5"	16.0"	13.0"	12.0"	12.5"	6.0"	5.5"	7.5"	9.0"
		62	16.0"	16.0"	12.0"	11.0"	16.0"	14.5"	15.0"	16.0"	7.5"	6.5"	10.0"	10.5"	8.5"	8.0"				7.0"
		72	16.0"	16.0"	9.5"	9.0"	16.0"	12.5"	12.0"	12.5"	6.0"	5.5"	7.5"	9.0"	7.0"	6.0"				6.0"
		110	11.0"	11.0"	5.5"	5.0"	6.5"	8.5"	7.0"	6.0"				6.0"	5.5"					5.0"
		200	5.5"					5.0"	5.5"					5.0"	5.5"					5.0"
			3-1/2" MIN EDGE DISTANCE																	
			C1	C2	C3	C4	C5	C6	C1	C2	C3	C4	C5	C6	C1	C2	C3	C4	C5	C6
	1/4" POWERS SS DROP-IN W/ 1/4-20 SS BOLT AND 1" EMBED (3000psi MIN CONC) *	48	16.0"	16.0"	16.0"	16.0"	16.0"	16.0"	16.0"	16.0"	11.0"	10.0"	16.0"	14.0"	13.0"	13.0"	6.5"	5.5"	8.0"	9.5"
		62	16.0"	16.0"	13.0"	12.0"	16.0"	15.5"	16.0"	16.0"	8.0"	7.0"	10.5"	11.0"	9.0"	8.0"	5.0"		5.0"	7.5"
		72	16.0"	16.0"	10.5"	9.5"	16.0"	13.5"	13.0"	13.0"	6.5"	5.5"	8.0"	9.5"	7.5"	6.5"				6.5"
		110	12.0"	11.5"	6.0"	5.5"	7.0"	9.0"	7.5"	6.5"				6.5"	6.0"	5.0"				5.5"
		200	6.0"	5.0"				5.5"	6.0"	5.0"				5.5"	6.0"	5.0"				5.5"
			2" MIN EDGE DISTANCE																	
			C1	C2	C3	C4	C5	C6	C1	C2	C3	C4	C5	C6	C1	C2	C3	C4	C5	C6
	#12 SMS W/ 2" EYEWALL ARMOR INSERT W/ 2" EMBED (2000psi MIN CONC)	48	16.0"	16.0"	13.0"	13.0"	16.0"	13.5"	16.0"	16.0"	8.0"	7.5"	16.0"	9.5"	14.5"	15.0"	5.0"	4.5"	9.0"	6.5"
		62	16.0"	16.0"	9.5"	9.0"	16.0"	10.5"	16.0"	16.0"	6.0"	5.5"	12.5"	7.5"	10.5"	9.5"	3.5"	3.5"	5.5"	5.0"
		72	16.0"	16.0"	8.0"	7.5"	16.0"	9.5"	14.5"	15.0"	5.0"	4.5"	9.0"	6.5"	8.5"	7.5"	3.0"		4.5"	4.5"
		110	13.5"	13.5"	4.5"	4.0"	8.0"	6.0"	8.5"	7.0"	3.0"		4.5"	4.0"	7.0"	5.5"			3.5"	3.5"
		200	7.0"	5.5"			3.5"	3.5"	7.0"	5.5"			3.5"	3.5"	7.0"	5.5"			3.5"	3.5"
	#12 SMS W/ 2.75" EYEWALL ARMOR INSERT W/ 2.5" EMBED (2000psi MIN CONC)	48	16.0"	16.0"	16.0"	16.0"	16.0"	16.0"	16.0"	16.0"	11.5"	11.0"	16.0"	14.0"	16.0"	16.0"	7.0"	6.5"	11.5"	9.5"
		62	16.0"	16.0"	13.5"	13.0"	16.0"	15.5"	16.0"	16.0"	8.5"	8.0"	16.0"	11.0"	13.5"	12.0"	5.5"	4.5"	7.5"	7.5"
		72	16.0"	16.0"	11.0"	10.5"	16.0"	13.5"	16.0"	16.0"	7.0"	6.5"	11.5"	9.5"	11.0"	9.5"	4.5"	4.0"	6.0"	6.0"
		110	16.0"	16.0"	6.5"	6.0"	10.5"	9.0"	11.0"	9.5"	4.5"	4.0"	5.5"	6.0"	9.0"	7.5"	3.5"	3.0"	4.5"	5.0"
		200	9.0"	7.5"	3.5"	3.0"	4.5"	5.0"	9.0"	7.5"	3.5"	3.0"	4.5"	5.0"	9.0"	7.5"	3.5"	3.0"	4.5"	5.0"

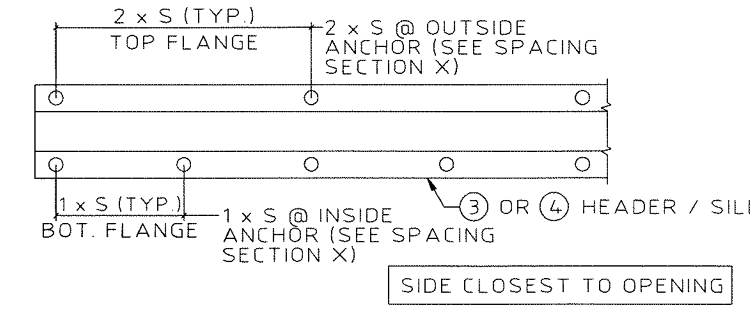

NOTE: "S" INDICATES ANCHOR SCHEDULE SPACING

SPACING DIAGRAM FOR C1 CONNECTION TYPE:

- C1 CONNECTION TYPE USING PIECE ③ OR ④

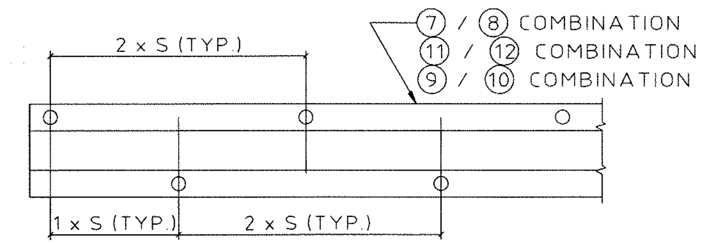

NOTE: "S" INDICATES ANCHOR SCHEDULE SPACING

SPACING DIAGRAM FOR C3 & C4 CONNECTION TYPE:

- C3 CONNECTION TYPE USING PIECE ⑩ WITH OUTSIDE ANCHORS ONLY
- C4 CONNECTION TYPE USING PIECE ⑧ OR ⑫ WITH OUTSIDE ANCHORS ONLY

ANCHOR NOTES:

1. SPANS AND LOADS SHOWN HERE ARE FOR DETERMINING ANCHOR SPACING ONLY. ALLOWABLE STORM SHUTTER SPANS FOR SPECIFIC LOADS MUST BE LIMITED TO THOSE SHOWN IN TABLE 1 OR 3 AS APPLICABLE (Pg 1).
2. ENTER ANCHOR SCHEDULE BASED ON THE EXISTING STRUCTURE MATERIAL, ANCHOR TYPE AND EDGE DISTANCE. SELECT DESIGN LOAD GREATER THAN OR EQUAL TO NEGATIVE DESIGN LOAD ON SHUTTER AND SELECT SPAN GREATER THAN OR EQUAL TO SHUTTER SPAN.
3. SEE MOUNTING SECTION DETAILS FOR IDENTIFICATION OF CONNECTION TYPE.
4. EXISTING STRUCTURE MAY BE CONCRETE, ASTM C-90 HOLLOW CONCRETE BLOCK OR WOOD FRAMING. REFERENCE ANCHOR SCHEDULE FOR PROPER ANCHOR TYPE BASED ON TYPE OF EXISTING STRUCTURE AND APPROPRIATE CONNECTION TYPE. SEE CONNECTION DETAILS FOR IDENTIFICATION OF CONNECTION TYPE.
5. ALL CONCRETE ANCHORS SHALL BE INSTALLED TO NON-CRACKED CONCRETE ONLY.
6. THE CONTRACTOR IS RESPONSIBLE TO ENSURE THE ANCHORS ARE INSTALLED IN ACCORDANCE WITH MANUFACTURERS' RECOMMENDATIONS. EMBEDMENT LENGTHS SHALL BE AS NOTED AND DO NOT INCLUDE STUCCO OR OTHER FINISHES.
7. WHERE EXISTING STRUCTURE IS WOOD FRAMING, WOOD FRAMING CONDITIONS VARY. FIELD VERIFY THAT FASTENERS ARE INTO ADEQUATE WOOD FRAMING MEMBERS, NOT PLYWOOD. FASTENING TO PLYWOOD IS ACCEPTABLE ONLY FOR SIDE CLOSURE PIECES.
8. WHERE LAG SCREWS FASTEN TO NARROW FACE OF STUD FRAMING, FASTENER SHALL BE LOCATED IN CENTER OF NOMINAL 2" x 4" (MIN.) WOOD STUD. 3/4" EDGE DISTANCE IS ACCEPTABLE FOR WOOD FRAMING. LAG SCREWS SHALL HAVE PHILLIPS PAN HEAD OR HEX HEAD.
9. MACHINE SCREWS SHALL HAVE MINIMUM OF 1/2" ENGAGEMENT OF THREADS IN BASE ANCHOR AND MAY HAVE EITHER A PAN HEAD, TRUSS HEAD, OR WAFER HEAD (SIDEWALK BOLT), U.O.N.

(hatched box) DESIGNATES ANCHOR CONDITIONS WHICH ARE NOT ACCEPTABLE USES.

* DESIGNATES ANCHORS WHICH ARE REMOVABLE BY REMOVING MACHINE SCREW, NUT OR WASHER WINGNUT.

10. MINIMUM CONCRETE STRENGTHS ARE AS INDICATED IN ANCHOR SCHEDULE.
11. WHEN ANCHORING TO HOLLOW BLOCK, SDS DRILLS SHOULD NOT BE USED TO DRILL INTO HOLLOW BLOCK, NOR SHOULD IMPACT DRILLS BE USED TO INSTALL CONCRETE SCREWS TO HOLLOW BLOCK

FRANK L. BENNARDO, P.E.
PE# 96064
STATE OF TEXAS
FRANK L. BENNARDO
96064
LICENSED PROFESSIONAL ENGINEER
09/06/2019
IF CHECKED, CERTIFYING P.E. APPEARS BELOW
FRANK L. BENNARDO, P.E.
96064

VALID FOR 1 PERMIT ONLY U.N.O.

NOTICE: IF THIS SHEET DOES NOT CONTAIN AN ORIGINAL SIGNATURE & ENGINEER SEAL: IF THERE IS A DIGITAL SIGNATURE ON SHEET 1, THIS SHEET IS PART OF A DIGITALLY SIGNED FILE, SHALL REMAIN IN DIGITAL FORMAT, & **PRINTED COPIES OF THIS DOCUMENT ARE NOT CONSIDERED SIGNED AND SEALED.** IF THERE IS NO DIGITAL SIGNATURE ON SHEET 1 OR THIS SHEET DOES NOT CONTAIN AN ENGINEER'S ORIGINAL SIGNATURE & SEAL, THIS SHEET IS A COPY/DRAFT.

ENGINEERING EXPRESS®
CORPORATE OFFICE:
160 SW 12th AVE, SUITE 106
DEERFIELD BEACH, FL 33442
P: (954) 354-0660 F: (954) 354-0443
E: HELLO@ENGINEERINGEXPRESS.COM
ENGINEERINGEXPRESS.COM
CERT OF AUTH #F-11383

TOWN & COUNTRY INDUSTRIES
400 WEST McNAB ROAD
FT. LAUDERDALE, FL 33309
(954) 970-9999

6.8 ACCORDION SHUTTER
TEXAS DEARTMENT OF INSURANCE
INTERNATIONAL BUILDING CODE

REMARKS	DRWN	CHKD	DATE
INIT ISSUE	RWN	FLB	05/24/18

THIS DOCUMENT IS THE PROPERTY OF ENGINEERING EXPRESS, AND SHALL NOT BE REPRODUCED IN WHOLE OR PART WITHOUT WRITTEN CONSENT OF ENGINEERING EXPRESS. ALTERATIONS, ADDITIONS, OR OTHER MARKINGS TO THIS DOCUMENT ARE NOT PERMITTED AND INVALIDATE OUR CERTIFICATION.

COPYRIGHT ENGINEERING EXPRESS®

15-2338

SCALE: NTS UNLESS NOTED

09/06/2019 - 9:32am rickn V:\projects\15-2338 6.8 Accordion Shutter - FSA - Update FL 13757.1 for 2014 Florida Bldg Cod-Project\WP(TD) Submittal\15-2338d-Dwg-TDI.dwg

ANCHOR SCHEDULE: CONCRETE (CONT.)

2-3/16" MIN EDGE DISTANCE (1/4" POWERS TAPPER+: **1-1/2" MIN EDGE DISTANCE**)

HOST STRUCT.	ANCHOR	LOAD (psf)	Spans Up To 6'-0" CONN TYPE C1	C2	C3	C4	C5	C6	Spans Up To 8'-8" CONN TYPE C1	C2	C3	C4	C5	C6	Spans Up To 13'-0" CONN TYPE C1	C2	C3	C4	C5	C6
CONCRETE	5/16" ITW TAPCON XL WITH 1-3/4" EMBED (2899psi MIN CONC)	48	16.0"	16.0"	16.0"	16.0"	16.0"	16.0"	16.0"	16.0"	15.0"	13.5"	16.0"	16.0"	16.0"	16.0"	9.0"	8.0"	11.5"	12.5"
		62	16.0"	16.0"	16.0"	16.0"	16.0"	16.0"	16.0"	16.0"	10.5"	9.5"	15.5"	14.5"	13.0"	12.0"	6.5"	5.5"	7.5"	10.0"
		72	16.0"	16.0"	14.0"	13.0"	16.0"	16.0"	16.0"	16.0"	9.0"	8.0"	11.5"	12.5"	11.0"	9.5"	5.5"	4.5"	5.5"	8.5"
		110	16.0"	16.0"	8.5"	7.5"	10.5"	12.0"	10.5"	9.0"	5.5"	4.5"	5.5"	8.5"	9.0"	7.5"	4.5"	4.0"	4.5"	7.0"
		200	9.0"	7.5"	4.5"	4.0"	4.5"	7.0"	9.0"	7.5"	4.5"	4.0"	4.5"	7.0"	9.0"	7.5"	4.5"	4.0"	4.5"	7.0"
	5/16" ELCO ULTRACON WITH 1-3/4" EMBED (3500psi MIN CONC)	48	16.0"	16.0"	16.0"	16.0"	16.0"	16.0"	16.0"	16.0"	16.0"	15.5"	16.0"	16.0"	16.0"	16.0"	10.0"	9.0"	12.0"	15.0"
		62	16.0"	16.0"	16.0"	16.0"	16.0"	16.0"	16.0"	16.0"	12.0"	11.0"	16.0"	16.0"	14.0"	13.0"	7.5"	6.5"	8.0"	11.5"
		72	16.0"	16.0"	16.0"	15.0"	16.0"	16.0"	16.0"	16.0"	10.0"	9.0"	12.0"	15.0"	11.5"	10.0"	6.5"	5.5"	6.0"	10.0"
		110	16.0"	16.0"	9.5"	8.0"	11.0"	14.0"	11.5"	10.0"	6.0"	5.0"	6.0"	10.0"	9.5"	8.0"	5.0"		5.0"	8.5"
		200	9.5"	8.0"	5.0"		5.0"	8.5"	9.5"	8.0"	5.0"		5.0"	8.5"	9.5"	8.0"	5.0"		5.0"	8.5"
	1/4" POWERS TAPPER+ W/ 1-3/4" EMBED (3000psi MIN CONC)		**1-1/2" MIN EDGE DISTANCE** C1	C2	C3	C4	C5	C6	C1	C2	C3	C4	C5	C6	C1	C2	C3	C4	C5	C6
		48	16.0"	16.0"	10.0"	10.0"	16.0"	10.5"	16.0"	16.0"	6.0"	6.0"	16.0"	7.0"	11.0"	11.0"			6.5"	5.0"
		62	16.0"	16.0"	7.0"	7.0"	16.0"	8.0"	13.5"	14.5"	4.5"	4.0"	9.0"	5.5"	7.5"	7.0"				
		72	16.0"	16.0"	6.0"	5.5"	16.0"	7.0"	11.0"	11.0"			6.5"	5.0"	6.5"	5.5"				
		110	10.0"	10.0"			6.0"	4.5"	6.0"	5.5"					5.0"	4.0"				
		200	5.0"	4.0"					5.0"	4.0"					5.0"	4.0"				

3-1/8" MIN EDGE DISTANCE (1/4" POWERS TAPPER+: **3" MIN EDGE DISTANCE**)

HOST STRUCT.	ANCHOR	LOAD (psf)	Spans Up To 6'-0" CONN TYPE C1	C2	C3	C4	C5	C6	Spans Up To 8'-8" CONN TYPE C1	C2	C3	C4	C5	C6	Spans Up To 13'-0" CONN TYPE C1	C2	C3	C4	C5	C6
CONCRETE	5/16" ITW TAPCON XL WITH 1-3/4" EMBED (2899psi MIN CONC)	48	16.0"	16.0"	16.0"	16.0"	16.0"	16.0"	16.0"	16.0"	15.0"	14.0"	16.0"	16.0"	16.0"	16.0"	9.0"	8.0"	12.0"	13.0"
		62	16.0"	16.0"	16.0"	16.0"	16.0"	16.0"	16.0"	16.0"	11.0"	9.5"	16.0"	15.0"	13.5"	12.5"	6.5"	6.0"	7.5"	10.0"
		72	16.0"	16.0"	14.5"	13.0"	16.0"	16.0"	16.0"	16.0"	9.0"	8.0"	12.0"	13.0"	11.5"	10.0"	5.5"	5.0"	6.0"	8.5"
		110	16.0"	16.0"	8.5"	7.5"	10.5"	12.0"	11.0"	9.5"	5.5"	4.5"	6.0"	8.5"	9.0"	7.5"	4.5"	4.0"	4.5"	7.5"
		200	9.0"	7.5"	4.5"	4.0"	4.5"	7.5"	9.0"	7.5"	4.5"	4.0"	4.5"	7.5"	9.0"	7.5"	4.5"	4.0"	4.5"	7.5"
	5/16" ELCO ULTRACON WITH 1-3/4" EMBED (3500psi MIN CONC)	48	16.0"	16.0"	16.0"	16.0"	16.0"	16.0"	16.0"	16.0"	16.0"	16.0"	16.0"	16.0"	16.0"	16.0"	11.0"	9.5"	13.5"	16.0"
		62	16.0"	16.0"	16.0"	16.0"	16.0"	16.0"	16.0"	16.0"	13.0"	12.0"	16.0"	16.0"	15.5"	14.0"	8.0"	7.0"	8.5"	12.5"
		72	16.0"	16.0"	16.0"	16.0"	16.0"	16.0"	16.0"	16.0"	11.0"	9.5"	13.5"	16.0"	13.0"	11.0"	7.0"	6.0"	7.0"	11.0"
		110	16.0"	16.0"	10.5"	9.0"	12.0"	15.5"	12.5"	11.0"	6.5"	5.5"	6.5"	10.5"	10.5"	8.5"	5.5"		5.0"	9.0"
		200	10.5"	8.5"	5.5"		5.0"	9.0"	10.5"	8.5"	5.5"		5.0"	9.0"	10.5"	8.5"	5.5"		5.0"	9.0"
	1/4" POWERS TAPPER+ W/ 1-3/4" EMBED (3000psi MIN CONC)		**3" MIN EDGE DISTANCE** C1	C2	C3	C4	C5	C6	C1	C2	C3	C4	C5	C6	C1	C2	C3	C4	C5	C6
		48	16.0"	16.0"	16.0"	16.0"	16.0"	16.0"	16.0"	16.0"	11.0"	10.0"	16.0"	13.0"	16.0"	16.0"	6.5"	6.0"	10.0"	9.0"
		62	16.0"	16.0"	12.5"	12.0"	16.0"	14.5"	16.0"	16.0"	8.0"	7.0"	13.5"	10.0"	11.5"	10.5"	5.0"	4.5"	6.5"	7.0"
		72	16.0"	16.0"	10.5"	9.5"	16.0"	12.5"	16.0"	16.0"	6.5"	6.0"	10.0"	9.0"	9.5"	8.5"	4.0"		5.0"	6.0"
		110	15.0"	15.0"	6.0"	5.5"	9.0"	8.5"	9.5"	8.0"	4.0"		5.0"	6.0"	7.5"	6.5"			4.0"	5.0"
		200	7.5"	6.5"			4.0"	5.0"	7.5"	6.5"			4.0"	5.0"	7.5"	6.5"			4.0"	5.0"

ANCHOR SCHEDULE: HOLLOW CONCRETE BLOCK

HOST STRUCT.	ANCHOR	LOAD (psf)	Spans Up To 6'-0" CONN TYPE C1	C2	C3	C4	C5	Spans Up To 8'-8" CONN TYPE C1	C2	C3	C4	C5	Spans Up To 13'-0" CONN TYPE C1	C2	C3	C4	C5
HOLLOW CONCRETE BLOCK			**1" MIN EDGE DISTANCE**														
	1/4" ITW TAPCON WITH 1-1/4" EMBED	48	7.5"	7.5"	3.0"	3.0"	7.5"	5.0"	5.0"			5.0"	3.0"	3.0"			
		62	6.0"	6.0"			6.0"	3.5"	4.0"								
		72	5.0"	5.0"			4.5"	3.0"	3.0"								
		110															
		200															
	1/4" ELCO ULTRACON WITH 1-1/4" EMBED	48	11.5"	11.5"	6.5"	6.5"	11.5"	8.0"	8.0"			7.5"	4.5"	4.5"			
		62	9.0"	9.0"	4.5"	4.0"	9.0"	5.5"	6.0"								
		72	7.5"	7.5"			6.5"	4.5"	4.5"								
		110	4.0"	4.0"													
		200															
	1/4" MILLENIUM MILLFAST ANCHOR W/ 1-1/4" EMBED	48	14.0"	14.0"	6.0"	6.0"	14.0"	9.5"	9.5"			9.0"	5.5"	5.5"			
		62	10.5"	10.5"	4.0"	4.0"	10.5"	6.5"	7.5"			4.5"	4.0"				
		72	9.0"	9.0"			8.0"	5.5"	5.5"								
		110	5.0"	5.0"													
		200															
	1/4" ALL-POINTS SOLID-SET ANCHOR W/ 7/8" EMBED & 1/4-20 SS MACHINE SCREW		**1-1/4" MIN EDGE DISTANCE** C1	C2	C3	C4	C5	C1	C2	C3	C4	C5	C1	C2	C3	C4	C5
		48	13.5"	13.5"	5.5"	5.5"	13.5"	9.5"	9.5"	3.5"	3.0"	9.0"	5.5"	5.5"			3.0"
		62	10.5"	10.5"	4.0"	4.0"	10.5"	6.5"	7.0"			4.5"	3.5"	3.5"			
		72	9.0"	9.0"	3.0"	3.0"	8.0"	5.5"	5.5"			3.0"	3.0"				
		110	5.0"	5.0"			3.0"	3.0"									
		200															
	5/16" ITW TAPCON XL WITH 1-3/4" EMBED		**3" MIN EDGE DISTANCE** C1	C2	C3	C4	C5	C1	C2	C3	C4	C5	C1	C2	C3	C4	C5
		48															
		62															
		72															
		110															
		200															
	5/16" ELCO ULTRACON WITH 1-1/4" EMBED		**1-9/16" MIN EDGE DISTANCE** C1	C2	C3	C4	C5	C1	C2	C3	C4	C5	C1	C2	C3	C4	C5
		48	10.5"	10.5"	5.5"	5.5"	10.5"	7.5"	7.5"			7.0"					
		62	8.0"	8.0"			8.0"	5.0"	5.5"								
		72	7.0"	7.0"			6.0"										
		110															
		200															

HOST STRUCT.	ANCHOR	LOAD (psf)	Spans Up To 6'-0" CONN TYPE C1	C2	C3	C4	C5	Spans Up To 8'-8" CONN TYPE C1	C2	C3	C4	C5	Spans Up To 13'-0" CONN TYPE C1	C2	C3	C4	C5
HOLLOW CONCRETE BLOCK			**2-1/2" MIN EDGE DISTANCE**														
	1/4" ITW TAPCON WITH 1-1/4" EMBED	48	10.5"	10.5"	6.5"	6.5"	10.5"	7.0"	7.0"	3.5"	3.5"	7.0"	4.0"	4.0"			
		62	8.0"	8.0"	4.5"	4.0"	8.0"	5.0"	5.5"			3.5"	3.0"				
		72	7.0"	7.0"	3.5"	3.0"	6.0"	4.0"	4.0"								
		110	3.5"	3.5"													
		200															
	1/4" ELCO ULTRACON WITH 1-1/4" EMBED	48	11.5"	11.5"	6.0"	6.0"	11.5"	8.0"	8.0"			7.5"	4.5"	4.5"			
		62	9.0"	9.0"	4.0"	4.0"	9.0"	5.5"	6.0"								
		72	7.5"	7.5"			6.5"	4.5"	4.5"								
		110	4.0"	4.0"													
		200															
	1/4" MILLENIUM MILLFAST ANCHOR W/ 1-1/4" EMBED	48	15.0"	15.0"	9.0"	9.0"	15.0"	10.5"	10.5"	5.0"	5.0"	10.0"	6.0"	6.0"			
		62	11.5"	11.5"	6.0"	5.5"	11.5"	7.5"	8.0"			5.0"	4.0"	4.0"			
		72	10.0"	10.0"	5.0"	4.5"	9.0"	6.0"	6.0"								
		110	5.5"	5.5"													
		200															
	1/4" ALL-POINTS SOLID-SET ANCHOR W/ 7/8" EMBED & 1/4-20 SS MACHINE SCREW		**2" MIN EDGE DISTANCE** C1	C2	C3	C4	C5	C1	C2	C3	C4	C5	C1	C2	C3	C4	C5
		48	16.0"	16.0"	9.5"	9.5"	16.0"	16.0"	16.0"	6.0"	5.5"	16.0"	9.5"	9.5"	3.5"	3.0"	5.5"
		62	16.0"	16.0"	7.0"	6.5"	16.0"	11.5"	12.5"	4.0"	4.0"	8.0"	6.5"	6.0"			3.5"
		72	15.5"	15.5"	5.5"	5.0"	14.0"	9.5"	9.5"	3.5"	3.0"	5.5"	5.5"	4.5"			3.0"
		110	8.5"	8.5"	3.5"	3.0"	5.0"	5.5"	4.5"				4.5"	3.5"			
		200	4.5"	3.5"				4.5"	3.5"				4.5"	3.5"			
	5/16" ITW TAPCON XL WITH 1-3/4" EMBED		**4" MIN EDGE DISTANCE** C1	C2	C3	C4	C5	C1	C2	C3	C4	C5	C1	C2	C3	C4	C5
		48	16.0"	16.0"	11.5"	11.5"	16.0"	12.0"	12.0"	6.5"	6.0"	11.5"	6.5"	7.0"	4.0"		4.0"
		62	13.0"	13.0"	8.0"	7.5"	13.0"	8.5"	9.0"	4.5"	4.0"	5.5"	4.5"	4.5"			
		72	11.5"	11.5"	6.5"	5.5"	10.0"	6.5"	7.0"	4.0"		4.0"	4.0"				
		110	6.0"	6.0"				4.0"									
		200															
	5/16" ELCO ULTRACON WITH 1-1/4" EMBED		**3-1/8" MIN EDGE DISTANCE** C1	C2	C3	C4	C5	C1	C2	C3	C4	C5	C1	C2	C3	C4	C5
		48	16.0"	16.0"	10.5"	10.5"	16.0"	12.5"	12.5"	6.0"	5.5"	12.5"	7.5"	7.5"			
		62	14.5"	14.5"	7.0"	6.5"	14.5"	9.0"	10.0"			6.0"	5.0"				
		72	12.5"	12.5"	6.0"	5.5"	11.0"	7.5"	7.5"								
		110	6.5"	6.5"													
		200															

ANCHOR NOTES: SEE SHEET 10 FOR ANCHOR NOTES.

V:\projects\15-2338 6.8 Accordion Shutter - FSA - Update FL13757.1 for 2014 Florida Bldg Cod-Project\WPITD\ Submittal\15-2338d-Dwg-TDI.dwg

09/06/2019 - 9:32am rickn

FRANK L. BENNARDO, P.E. PE# 96064

STATE OF TEXAS 09/06/2019 FRANK L. BENNARDO 96064 LICENSED PROFESSIONAL ENGINEER

IF CHECKED, CERTIFYING P.E. APPEARS BELOW.
FRANK L. BENNARDO, P.E.
96064

VALID FOR 1 PERMIT ONLY U.N.O.

NOTICE: IF THIS SHEET DOES NOT CONTAIN AN ORIGINAL SIGNATURE & ENGINEER SEAL: IF THERE IS A DIGITAL SIGNATURE ON SHEET 1, THIS SHEET IS PART OF A DIGITALLY SIGNED FILE, SHALL REMAIN IN DIGITAL FORMAT, & **PRINTED COPIES OF THIS DOCUMENT ARE NOT CONSIDERED SIGNED AND SEALED.** IF THERE IS NO DIGITAL SIGNATURE ON SHEET 1 OR THIS SHEET DOES NOT CONTAIN AN ENGINEER'S ORIGINAL SIGNATURE & SEAL, THIS SHEET IS A COPY/DRAFT.

ENGINEERING EXPRESS®
CORPORATE OFFICE:
160 SW 12th AVE, SUITE 106
DEERFIELD BEACH, FL 33442
P: (954) 354-0660 F: (954) 354-0443
E: HELLO@ENGINEERINGEXPRESS.COM
ENGINEERINGEXPRESS.COM
CERT OF AUTH #F-11383

TOWN & COUNTRY INDUSTRIES
400 WEST McNAB ROAD
FT. LAUDERDALE, FL 33309
(954) 970-9999

6.8 ACCORDION SHUTTER
TEXAS DEARTMENT OF INSURANCE
INTERNATIONAL BUILDING CODE

REMARKS	DRWN	CHKD	DATE
INIT ISSUE	RWN	FLB	05/24/18
-	-	-	-
-	-	-	-
-	-	-	-
-	-	-	-

THIS DOCUMENT IS THE PROPERTY OF ENGINEERING EXPRESS, AND SHALL NOT BE REPRODUCED IN WHOLE OR PART WITHOUT WRITTEN CONSENT OF ENGINEERING EXPRESS. ALTERATIONS, ADDITIONS, OR OTHER MARKINGS TO THIS DOCUMENT ARE NOT PERMITTED AND INVALIDATE OUR CERTIFICATION.

COPYRIGHT ENGINEERING EXPRESS®

- 15-2338

SCALE: NTS UNLESS NOTED

ANCHOR SCHEDULE: HOLLOW CONCRETE BLOCK (CONT.)

HOST STRUCT.	ANCHOR	LOAD (psf)	2" MIN EDGE DISTANCE														
			Spans Up To 6'-0" CONN TYPE					Spans Up To 8'-8" CONN TYPE					Spans Up To 13'-0" CONN TYPE				
			C1	C2	C3	C4	C5	C1	C2	C3	C4	C5	C1	C2	C3	C4	C5
HOLLOW CONCRETE BLOCK	1/4" POWERS TAPPER+ W/ 1-1/4" EMBED	48	15.5"	15.5"	6.5"	6.5"	15.5"	10.5"	10.5"	4.0"	4.0"	10.5"	6.0"	6.0"			
		62	12.0"	12.0"	4.5"	4.5"	12.0"	7.5"	8.0"			5.0"	4.5"	4.0"			
		72	10.5"	10.5"	4.0"		9.0"	6.0"	6.0"								
		110	5.5"	5.5"													
		200															
	#12 SMS W/ 2" EYEWALL ARMOR INSERT W/ 1-1/4" EMBED	48	16.0"	16.0"	8.5"	8.5"	16.0"	13.0"	13.0"	5.0"	5.0"	12.5"	7.5"	7.5"	3.0"	3.0"	4.5"
		62	14.5"	14.5"	6.0"	6.0"	14.5"	9.5"	10.0"	4.0"	3.5"	6.0"	5.0"	4.5"			3.0"
		72	12.5"	12.5"	5.0"	4.5"	11.0"	7.5"	7.5"	3.0"	3.0"	4.5"	4.5"	3.5"			
		110	7.0"	7.0"	3.0"		4.0"	4.0"	3.5"				3.5"	3.0"			
		200	3.5"	3.0"				3.5"	3.0"				3.5"	3.0"			

ANCHOR SCHEDULE: GROUT-FILLED CONCRETE BLOCK

HOST STRUCT.	ANCHOR	LOAD (psf)	4" MIN EDGE DISTANCE														
			Spans Up To 6'-0" CONN TYPE					Spans Up To 8'-8" CONN TYPE					Spans Up To 13'-0" CONN TYPE				
			C1	C2	C3	C4	C5	C1	C2	C3	C4	C5	C1	C2	C3	C4	C5
GROUT-FILLED CONRETE BLOCK	5/16" ITW TAPCON XL W/ 2-1/4" MIN. EMBED	48	16.0"	16.0"	16.0"	16.0"	16.0"	16.0"	16.0"	16.0"	16.0"	16.0"	16.0"	16.0"	10.5"	9.5"	15.5"
		62	16.0"	16.0"	16.0"	16.0"	16.0"	16.0"	16.0"	12.5"	11.5"	16.0"	16.0"	16.0"	8.0"	7.0"	10.0"
		72	16.0"	16.0"	16.0"	15.5"	16.0"	16.0"	16.0"	10.5"	9.5"	15.5"	14.5"	12.5"	6.5"	5.5"	8.0"
		110	16.0"	16.0"	10.0"	9.0"	14.0"	14.5"	12.5"	6.5"	5.5"	7.5"	12.0"	10.0"	5.5"	4.5"	6.0"
		200	12.0"	10.0"	5.5"	4.5"	6.0"	12.0"	10.0"	5.5"	4.5"	6.0"	12.0"	10.0"	5.5"	4.5"	6.0"
	5/16" ELCO ULTRACON W/ 2-1/4" MIN. EMBED	48	16.0"	16.0"	13.5"	13.5"	16.0"	16.0"	16.0"	8.0"	7.5"	16.0"	9.5"	9.5"			6.0"
		62	16.0"	16.0"	9.5"	8.5"	16.0"	12.0"	12.5"	5.5"	5.0"	8.0"	6.5"	6.0"			
		72	16.0"	16.0"	7.5"	7.0"	14.0"	9.5"	9.5"			6.0"	5.5"				
		110	8.5"	8.5"			5.0"	5.5"									
		200															
			2" MIN EDGE DISTANCE														
			C1	C2	C3	C4	C5	C1	C2	C3	C4	C5	C1	C2	C3	C4	C5
	#12 SMS W/ 2" EYEWALL ARMOR INSERT W/ 2" EMBED	48	16.0"	16.0"	10.5"	10.5"	16.0"	16.0"	16.0"	6.5"	6.5"	16.0"	12.5"	12.5"	4.0"	3.5"	7.5"
		62	16.0"	16.0"	7.5"	7.5"	16.0"	15.5"	16.0"	5.0"	4.5"	10.5"	9.0"	8.0"	3.0"		5.0"
		72	16.0"	16.0"	6.5"	6.0"	16.0"	12.5"	12.5"	4.0"	3.5"	7.5"	7.0"	6.5"			4.0"
		110	11.5"	11.5"	4.0"	3.5"	7.0"	7.0"	6.0"			3.5"	6.0"	5.0"			3.0"
		200	6.0"	5.0"			3.0"	6.0"	5.0"			3.0"	6.0"	5.0"			3.0"

ANCHOR SCHEDULE: WOOD (G=0.55)

HOST STRUCT.	ANCHOR	LOAD (psf)	3/4" MIN EDGE DISTANCE														
			Spans Up To 6'-0" CONN TYPE					Spans Up To 8'-8" CONN TYPE					Spans Up To 13'-0" CONN TYPE				
			C1	C2	C3	C4	C5	C1	C2	C3	C4	C5	C1	C2	C3	C4	C5
WOOD (G=0.55)	1/4" LAG SCREW WITH 1-3/4" MIN THREAD PENETRATION	48	16.0"	16.0"	11.5"	11.5"	16.0"	16.0"	16.0"	7.5"	7.0"	16.0"	16.0"	16.0"	4.5"	4.5"	15.0"
		62	16.0"	16.0"	8.5"	8.5"	16.0"	16.0"	16.0"	5.5"	5.5"	16.0"	16.0"	15.5"	3.5"	3.5"	9.5"
		72	16.0"	16.0"	7.0"	7.0"	16.0"	16.0"	16.0"	4.5"	4.5"	15.0"	14.0"	12.5"	3.0"	3.0"	7.5"
		110	16.0"	16.0"	4.5"	4.0"	13.5"	14.0"	12.0"	3.0"	2.5"	7.5"	11.5"	9.5"	2.5"	2.0"	6.0"
		200	11.5"	9.5"	2.5"	2.0"	6.0"	11.5"	9.5"	2.5"	2.0"	6.0"	11.5"	9.5"	2.5"	2.0"	6.0"
	7/16" WOOD BUSHING WITH 1.13" MIN EMBED & 1/4-20 SS MACHINE SCREW	48	16.0"	16.0"	9.5"	9.5"	16.0"	13.0"	13.0"	5.5"	5.0"	13.0"	7.5"	7.5"	3.5"	3.0"	4.5"
		62	14.5"	14.5"	6.5"	6.0"	14.5"	9.5"	10.0"	4.0"	3.5"	6.5"	5.5"	5.0"	2.5"	2.0"	3.0"
		72	12.5"	12.5"	5.5"	5.0"	11.0"	7.5"	7.5"	3.5"	3.0"	4.5"	4.5"	3.5"	2.0"		2.0"
		110	7.0"	7.0"	3.0"	2.5"	4.0"	4.0"	3.5"	2.0"		2.0"	3.5"	3.0"			
		200	3.5"	3.0"				3.5"	3.0"				3.5"	3.0"			
	#14 SMS, #14 WOOD SCREW OR 1/4" POWERS TAPPER+ WITH 1-3/4" MIN THREAD PENETRATION	48	16.0"	16.0"	13.0"	13.0"	16.0"	16.0"	16.0"	8.5"	8.0"	16.0"	16.0"	16.0"	5.0"	5.0"	12.0"
		62	16.0"	16.0"	9.5"	9.5"	16.0"	16.0"	16.0"	6.0"	6.0"	16.0"	13.5"	12.5"	4.0"	3.5"	7.5"
		72	16.0"	16.0"	8.0"	7.5"	16.0"	16.0"	16.0"	5.0"	5.0"	12.0"	11.5"	10.0"	3.5"	3.0"	6.0"
		110	16.0"	16.0"	5.0"	4.5"	10.5"	11.0"	9.5"	3.0"	3.0"	6.0"	9.0"	7.5"	2.5"	2.5"	4.5"
		200	9.0"	7.5"	2.5"	2.5"	4.5"	9.0"	7.5"	2.5"	2.5"	4.5"	9.0"	7.5"	2.5"	2.5"	4.5"

ANCHOR SCHEDULE: WOOD (G=0.42)

HOST STRUCT.	ANCHOR	LOAD (psf)	3/4" MIN EDGE DISTANCE														
			Spans Up To 6'-0" CONN TYPE					Spans Up To 8'-8" CONN TYPE					Spans Up To 13'-0" CONN TYPE				
			C1	C2	C3	C4	C5	C1	C2	C3	C4	C5	C1	C2	C3	C4	C5
WOOD (G=0.42)	1/4" LAG SCREW WITH 1-3/4" MIN THREAD PENETRATION	48	16.0"	16.0"	9.0"	9.0"	16.0"	16.0"	16.0"	6.0"	5.5"	16.0"	16.0"	16.0"	3.5"	3.5"	10.0"
		62	16.0"	16.0"	6.5"	6.5"	16.0"	16.0"	16.0"	4.5"	4.0"	13.5"	11.5"	10.5"	2.5"	2.5"	6.0"
		72	16.0"	16.0"	5.5"	5.5"	16.0"	16.0"	16.0"	3.5"	3.5"	10.0"	9.5"	8.0"	2.5"	2.0"	5.0"
		110	15.0"	14.5"	3.5"	3.0"	9.0"	9.0"	8.0"	2.0"	2.0"	5.0"	7.5"	6.0"	2.0"		4.0"
		200	7.5"	6.0"	2.0"		4.0"	7.5"	6.0"	2.0"		4.0"	7.5"	6.0"	2.0"		4.0"
	#14 SMS, #14 WOOD SCREW OR 1/4" POWERS TAPPER+ WITH 1-3/4" MIN THREAD PENETRATION	48	16.0"	16.0"	9.5"	9.5"	16.0"	16.0"	16.0"	6.0"	5.5"	16.0"	11.0"	11.5"	3.5"	3.5"	7.0"
		62	16.0"	16.0"	7.0"	6.5"	16.0"	14.0"	15.0"	4.5"	4.0"	9.5"	8.0"	7.0"	2.5"	2.5"	4.5"
		72	16.0"	16.0"	5.5"	5.5"	16.0"	11.0"	11.5"	3.5"	3.5"	7.0"	6.5"	5.5"	2.0"	2.0"	3.5"
		110	10.5"	10.0"	3.5"	3.0"	6.0"	6.5"	5.5"	2.0"	2.0"	3.5"	5.0"	4.5"	2.0"		2.5"
		200	5.0"	4.5"	2.0"		2.5"	5.0"	4.5"	2.0"		2.5"	5.0"	4.5"	2.0"		2.5"

ANCHOR NOTES: SEE SHEET 10 FOR ANCHOR NOTES.

STATE OF TEXAS
FRANK L. BENNARDO
96064
LICENSED
PROFESSIONAL ENGINEER

FRANK L. BENNARDO, P.E.
96064

09/06/2019

FRANK L. BENNARDO, P.E.
96064

VALID FOR 1 PERMIT ONLY U.N.O.

NOTICE: IF THIS SHEET DOES NOT CONTAIN AN ORIGINAL SIGNATURE & ENGINEER SEAL: IF THERE IS A DIGITAL SIGNATURE ON SHEET 1, THIS SHEET IS PART OF A DIGITALLY SIGNED FILE, SHALL REMAIN IN DIGITAL FORMAT, & **PRINTED COPIES OF THIS DOCUMENT ARE NOT CONSIDERED SIGNED AND SEALED.** IF THERE IS NO DIGITAL SIGNATURE ON SHEET 1 OR THIS SHEET DOES NOT CONTAIN AN ENGINEER'S ORIGINAL SIGNATURE & SEAL, THIS SHEET IS A COPY/DRAFT.

ENGINEERING EXPRESS®
CORPORATE OFFICE:
160 SW 12th AVE, SUITE 106
DEERFIELD BEACH, FL 33442
P: (954) 354-0660 F: (954) 354-0443
E: HELLO@ENGINEERINGEXPRESS.COM
ENGINEERINGEXPRESS.COM
CERT OF AUTH #F-11383

TOWN & COUNTRY INDUSTRIES
400 WEST McNAB ROAD
FT. LAUDERDALE, FL 33309
(954) 970-9999

6.8 ACCORDION SHUTTER
TEXAS DEARTMENT OF INSURANCE
INTERNATIONAL BUILDING CODE

REMARKS	DRWN	CHKD	DATE
INIT ISSUE	RWN	FLB	05/24/18

THIS DOCUMENT IS THE PROPERTY OF ENGINEERING EXPRESS, AND SHALL NOT BE REPRODUCED IN WHOLE OR PART WITHOUT WRITTEN CONSENT OF ENGINEERING EXPRESS. ALTERATIONS, ADDITIONS, OR OTHER MARKINGS TO THIS DOCUMENT ARE NOT PERMITTED AND INVALIDATE OUR CERTIFICATION.

COPYRIGHT ENGINEERING EXPRESS®

15-2338

SCALE: NTS UNLESS NOTED

09/06/2019 - 9:32am rickn V:\projects\15-2338 6.8 Accordion Shutter - FSA - Update FL13757.1 for 2014 Florida Bldg Cod-Project\WP\TDI Submittal\15-2338d-Dwg-TDI.dwg