FORCE 12 DIAMOND SCREEN

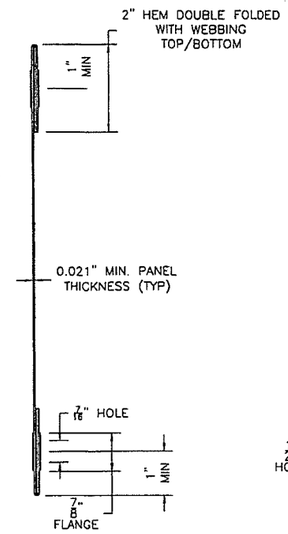

3.0 PANEL PROFILE
SCALE: NTS=1'-0"

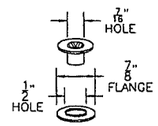

4.0 #2 SPUR GROMMET
SCALE: NTS=1'-0"

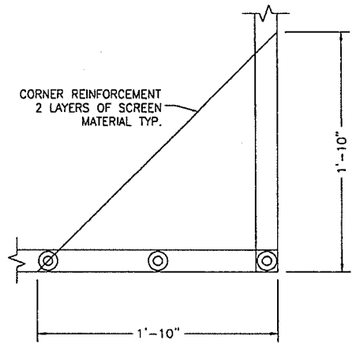

5.0 DETAIL D-D: CORNER REINFORCEMENT
SCALE: NTS=1'-0"

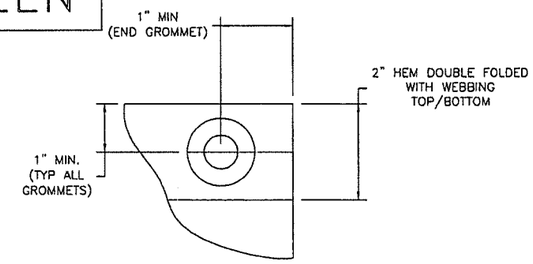

6.0 DETAIL C-C: CORNER GROMMET
SCALE: NTS=1'-0"

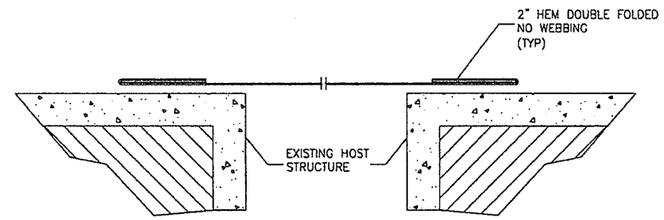

7.0 DETAIL B-B: HORIZONTAL SECTION
SCALE: NTS=1'-0"

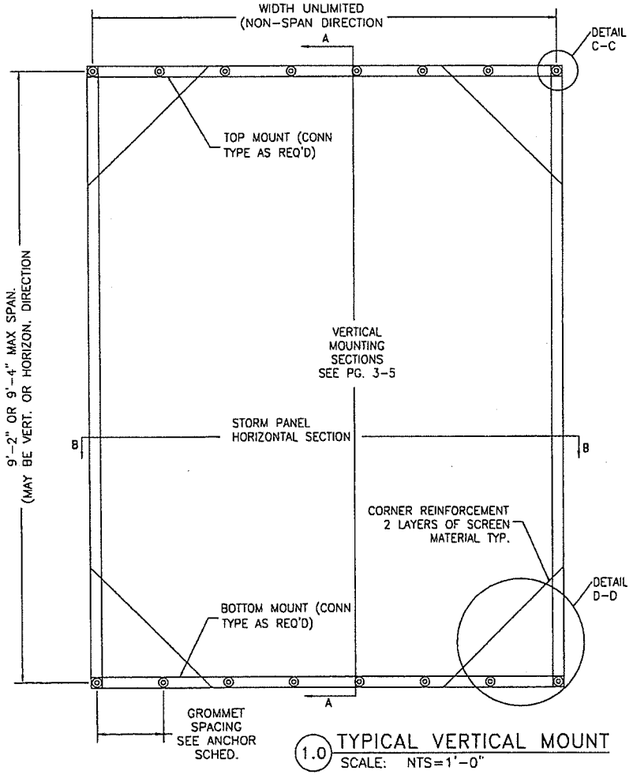

1.0 TYPICAL VERTICAL MOUNT
SCALE: NTS=1'-0"

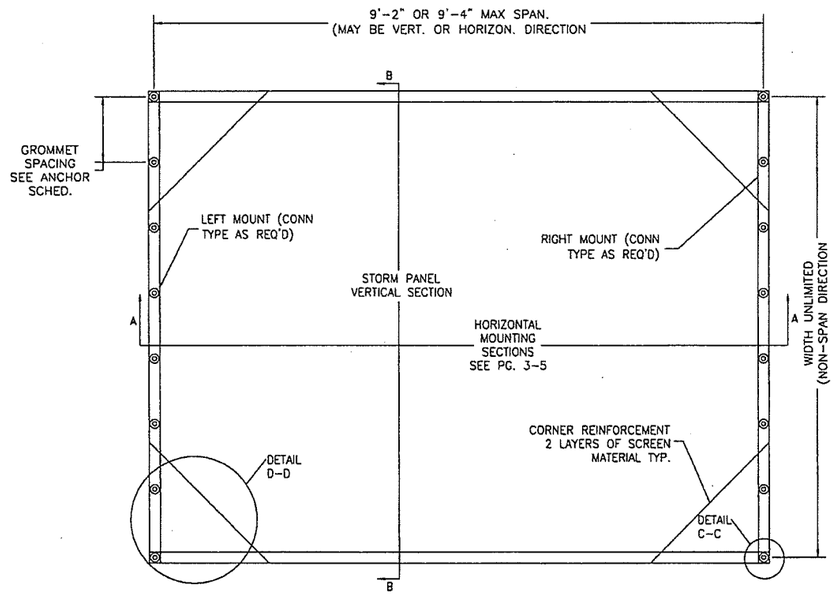

2.0 TYPICAL HORIZONTAL MOUNT
SCALE: NTS=1'-0"

SPAN NOTES:
1. ALLOWABLE PRESSURES SHALL NOT BE EXCEEDED.
2. PANEL SPANS LONGER THAN THE MAXIMUM NOTED WITHIN THESE DOCUMENTS ARE NOT ACCEPTABLE.
3. PANEL SPANS LESS THAN THE MINIMUM NOTED WITHIN THESE DOCUMENTS ARE NOT ACCEPTABLE.
4. NO SEPARATION FROM GLASS IS REQUIRED WHEN PANEL SPAN IS GREATER THAN MINIMUM SPAN NOTED.
5. VALID FOR PANELS MOUNTED VERTICALLY OR HORIZONTALLY.

GENERAL NOTES:

1. THIS STORM PANEL HAS BEEN TESTED AND EVALUATED AS A LARGE MISSILE IMPACT SYSTEM IN ACCORDANCE WITH THE 2018 INTERNATIONAL BUILDING CODE (IBC) AND THE 2018 INTERNATIONAL RESIDENTIAL CODE (IRC).
2. THIS PRODUCT MEETS ASCE 7-16 REQUIREMENTS.
3. POSITIVE AND NEGATIVE DESIGN PRESSURES TO BE USED WITH THESE DRAWINGS SHALL BE DETERMINED BY OTHERS FOR SPECIFIC JOBS IN ACCORDANCE WITH THE GOVERNING CODE. WHEN CALCULATING LOAD COMBINATIONS PER ASCE 7-16, USE OF DIRECTIONALITY FACTOR KD=0.85 IS ALLOWED.
4. THIS SHUTTER SYSTEM HAS BEEN SUBMITTED TO ICC-ES FOR EVALUATION AS A LARGE MISSILE IMPACT PROTECTIVE SYSTEM.
5. NO 33-1/3% INCREASE IN ALLOWABLE STRESS HAS BEEN USED IN THE DESIGN OF THIS PRODUCT. WIND LOAD DURATION FACTOR Cd=1.65 HAS BEEN USED FOR WOOD ANCHOR DESIGN.
6. THE SHUTTER SYSTEM DETAILED HEREIN IS GENERIC AND DOES NOT PROVIDE INFORMATION FOR A SPECIFIC SITE. IF SITE CONDITIONS DEVIATE FROM THE CONDITIONS DETAILED HEREIN, A LICENSED ENGINEER OR REGISTERED ARCHITECT SHALL PREPARE SITE SPECIFIC DOCUMENTS TO BE USED IN CONJUNCTION WITH THIS DOCUMENT.
7. PERMIT HOLDER SHALL VERIFY THE ADEQUACY OF THE EXISTING STRUCTURE TO WITHSTAND NEW SUPERIMPOSED LOADS.
8. STORM PANELS SHALL BE WOVEN POLYPROPYLENE FABRIC (THICKNESS t=0.021") WITH A MIN. WEIGHT = 7.8 OZ/SQYD.
9. PANELS SHOULD BE PERMANENTLY LABELED WITH A MINIMUM OF ONE LABEL PER PANEL AS FOLLOWS:

   FORCE 12 - SERIES 100 - DIAMOND SCREEN
   HENDEE ENTERPRISES INC.
   DESIGN PRESSURE RATING: _____
   THIS PRODUCT IS DESIGNED IN COMPLIANCE WITH:
   ASTM E 1886-05 (LARGE MISSLE/CYCLIC LOAD)
   ASTM E 1996-09 (LARGE MISSLE/CYCLIC LOAD)
   ASTM E 330-02 (UNIFORM STATIC LOAD PRESSURE)
   IMPACT RESISTANT: LARGE AND SMALL MISSILE IMPACT

10. STORM PANELS HAVE BEEN DESIGNED AND TESTED TO THE MAXIMUM SPAN AND LOADS SHOWN ON THESE DRAWINGS. REFERENCE HURRICANE TEST LABORATORY, LLC (HTL), RIVIERA BEACH, FL, TEST REPORTS.
11. PANELS MAY BE MOUNTED HORIZONTALLY WHERE APPLICABLE (i.e. WITH LINE OF ANCHORAGE IN VERTICAL DIRECTION).
12. ALL BOLTS & WASHERS SHALL BE ZINC COATED, GALVANIZED OR STAINLESS STEEL WITH A MINIMUM TENSILE STRENGTH OF 60 KSI.
13. ALL ACCEPTANCE CRITERIA HAVE BEEN MET FOR THIS SHUTTER AS A NON-POROUS SYSTEM, AS DEFINED IN ASTM E1996. IN KEEPING WITH THIS STANDARD, NO MINIMUM SEPARATION FROM THE GLAZING BEING PROTECTED IS REQUIRED, AND BREAKING OF THIS GLAZING DOES NOT COMPROMISE THE BUILDING ENVELOPE.
14. EXPOSED SIDE OPENINGS ALONG UNATTACHED EDGES OF A DEFLECTED SCREEN UNDER NEGATIVE PRESSURE SHALL BE CONSIDERED IN ORDER TO VERIFY COMPLIANCE WITH ALLOWABLE OPENING AREAS FOR EXTERIOR SURFACES AS SPECIFIED BY CODE.

James R. Bailey
4/19/20

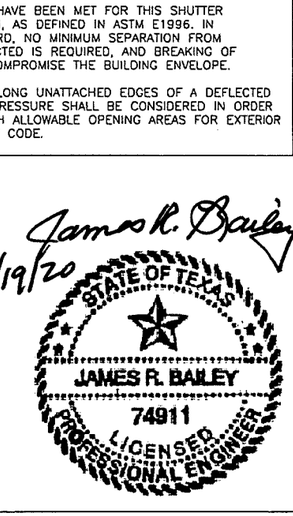

Hendee Enterprises, Inc.
The Innovative Solutions Company
P.O. Box 4388, Houston, TX 77210-4388 9365 South Park Dr, Houston, TX 77054
(713) 749-3322, Fax (713) 794-0494, (800) 231-7275 (toll), (800) 323-3841 (Texas)

EXPORT WARNING:
EXPORT OF THIS DOCUMENT TO COUNTRIES OUTSIDE OF THE U.S. SUBJECT TO U.S. EXPORT ADMINISTRATION REGULATIONS.

COPYRIGHT
COPYRIGHT © 2002
HENDEE ENTERPRISES, INC.
ALL RIGHTS RESERVED

CONSULTANTS:
James R. Bailey, P.E.
Texas PE # 74911
Platinum Risk Consulting LLC
4931 Chappel Hill Dr.
Missouri City, Texas 77459
281-403-2825
Texas Firm # 11044

CLIENT: HENDEE ENTERPRISES
LOCATION: HOUSTON, TX
TITLE: FORCE 12 - SERIES 100 - DIAMOND SCREEN
DATE: 10/31/12
REVISION: 0

BY:	REV:	DATE	DESCRIPTION
KKL	0	10/31/12	TEXAS DEPARTMENT OF INSURANCE SUBMITTAL

THIS DOCUMENT, CONTAINING CONCEPTS AND TRADE SECRET INFORMATION, IS THE PROPERTY OF HENDEE ENTERPRISES, INC. IT IS TRANSMITTED TO YOU IN CONFIDENCE AND TRUST, AND YOU AGREE TO TREAT THIS DOCUMENT IN STRICT CONFIDENCE, AND TO USE IT EXCLUSIVELY FOR THE BENEFIT OF HENDEE ENTERPRISES, INC. IT MAY NOT BE COPIED OR OTHERWISE REPRODUCED EXCEPT FOR THE BENEFIT OF HENDEE ENTERPRISES, INC. IT MAY NOT BE DISCLOSED TO OTHERS WITHOUT THE WRITTEN CONSENT OF HENDEE ENTERPRISES, INC. AND THAT IT MAY NOT BE USED FOR ANY PURPOSE OTHER THAN THE BUSINESS PURPOSE FOR WHICH IT IS TRANSMITTED TO YOU. UNAUTHORIZED USE OR DISCLOSURE MAY CAUSE IMMEDIATE AND IRREPARABLE HARM TO HENDEE ENTERPRISES, INC. AND MAY BE UNLAWFUL.

CHECKED BY:	
DRAWN BY:	MG
FILE NAME:	F-12 DIAMOND
JOB NUMBER:	DES07
DOCUMENT DATE:	07/26/07

SHEET: 1.0

J:\FORCE 12\2012 TEXAS DEPARTMENT OF INSURANCE\F12-SERIES-100-DIAMOND_SCREEN\F12-SERIES 100-DIAMOND SCREEN.dwg, 4/8/2020 1:54:16 PM, \\HEN-FPAD\DESIGN Kyocera CS 6002i KX

FORCE 12 DIAMOND SCREEN [ZIPPER APPLICATION]

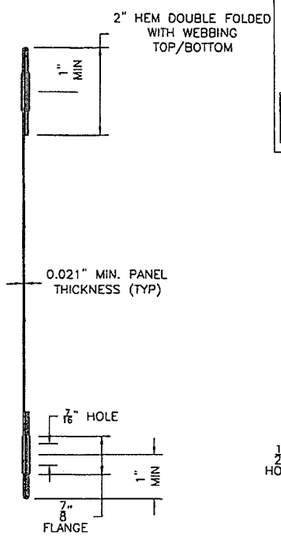

3.0 PANEL PROFILE
SCALE: NTS=1'-0"

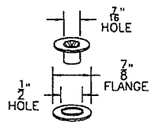

4.0 #2 SPUR GROMMET
SCALE: NTS=1'-0"

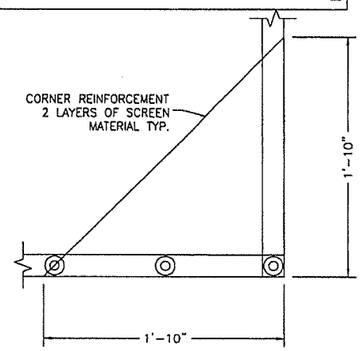

5.0 DETAIL D-D: CORNER REINFORCEMENT
SCALE: NTS=1'-0"

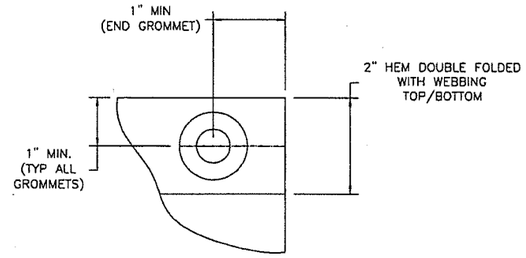

6.0 DETAIL C-C: CORNER GROMMET
SCALE: NTS=1'-0"

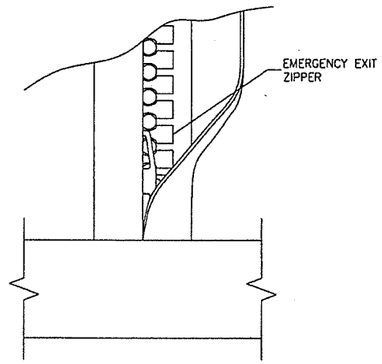

8.0 DETAIL E-E: ZIPPER POCKET
SCALE: NTS=1'-0"

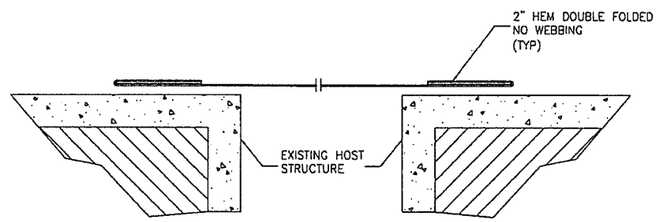

7.0 DETAIL B-B: HORIZONTAL SECTION
SCALE: NTS=1'-0"

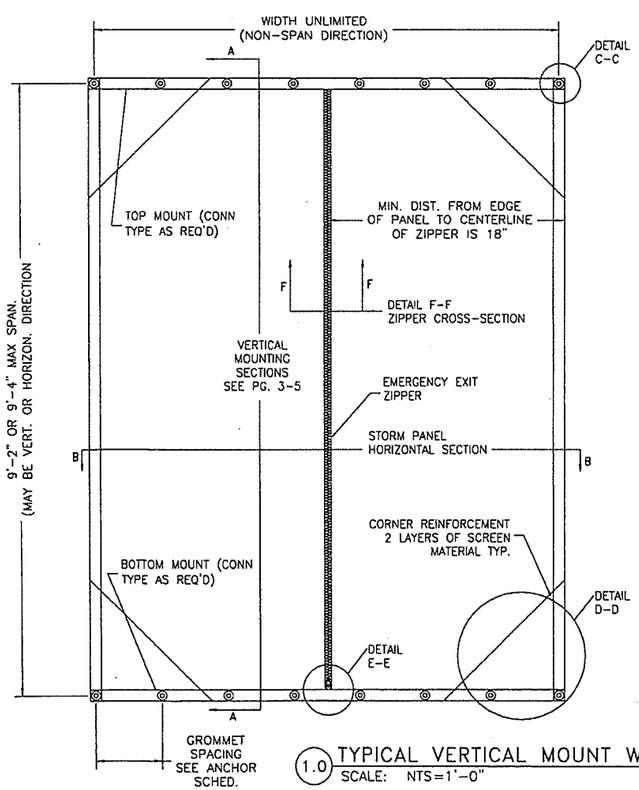

1.0 TYPICAL VERTICAL MOUNT W/ ZIPPER
SCALE: NTS=1'-0"

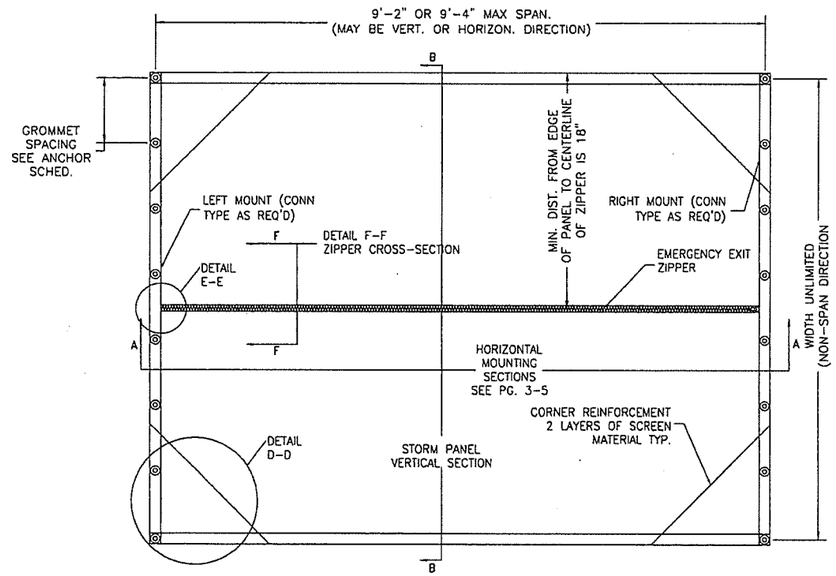

2.0 TYPICAL HORIZONTAL MOUNT W/ ZIPPER
SCALE: NTS=1'-0"

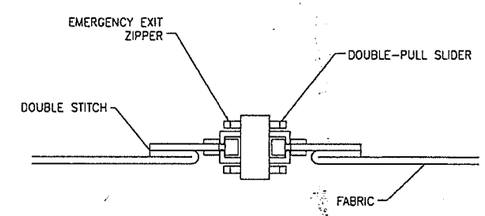

9.0 DETAIL F-F: ZIPPER CROSS SECTION
SCALE: NTS=1'-0"

*NOTE: ZIPPER MUST BE CLOSED FOR PRODUCT TO FUNCTION PROPERLY DURING USE

James R. Bailey
4/14/20

STATE OF TEXAS
JAMES R. BAILEY
74911
LICENSED
PROFESSIONAL ENGINEER

Hendee Enterprises, Inc.
The Innovative Solutions Company
P.O. Box 4289, Houston, TX 77210-4289 9350 South Park Dr., Houston, TX 77054
(713) 796-2232, Fax (713) 796-4184, (800) 231-2323 (wat); (800) 321-2411 (fax)

EXPORT WARNING:
EXPORT OF THIS DOCUMENT TO COUNTRIES OUTSIDE OF THE U.S. IS SUBJECT TO U.S. EXPORT ADMINISTRATION REGULATIONS.

COPYRIGHT
COPYRIGHT © 2002
HENDEE ENTERPRISES, INC.
ALL RIGHTS RESERVED

CONSULTANTS:
James R. Bailey, P.E.
Texas PE # 74911
Platinum Risk Consulting LLC
4931 Chappel Hill Dr.
Missouri City, Texas 77459
281-403-2825
Texas Firm # 11044

CLIENT: HENDEE ENTERPRISES
LOCATION: HOUSTON, TX
TITLE: FORCE 12 - SERIES 100 - DIAMOND SCREEN
DATE: 10/31/12
REVISION: 0

BY:	REV.	DATE	DESCRIPTION
KEL	0	10/31/12	TEXAS DEPARTMENT OF INSURANCE SUBMITTAL

THIS DOCUMENT, CONTAINING CONFIDENTIAL AND TRADE SECRET INFORMATION, IS THE PROPERTY OF HENDEE ENTERPRISES, INC. AND IS OFFERED TO THE RECIPIENT ON THE CONDITION THAT IT (OR ANY REPRODUCTION OR PARTS THEREOF) WILL BE RETURNED TO HENDEE ENTERPRISES, INC. IF REQUESTED BY HENDEE ENTERPRISES, INC., IT WILL NOT BE EXCERPTED OR OTHERWISE REPRODUCED IN WHOLE OR IN PART WITHOUT THE PRIOR WRITTEN CONSENT OF THE OWNER, AND IT WILL NOT BE DISCLOSED OR OTHERWISE MADE AVAILABLE TO ANY OTHER PERSON OR ENTITY WITHOUT THE PRIOR WRITTEN CONSENT OF THE OWNER. THE RECIPIENT AGREES TO THE FOREGOING BY ACCEPTING THIS DOCUMENT.

CHECKED BY:
DRAWN BY: MG
FILE NAME: F-12 DIAMOND
JOB NUMBER: DES07
DOCUMENT DATE: 07/26/07

SHEET: 2.0

J:\FORCE 12\2012 TEXAS DEPARTMENT OF INSURANCE\F12-SERIES-100-DIAMOND_SCREEN\F12-SERIES 100-DIAMOND SCREEN.dwg, 4/8/2020 1:54:34 PM, \\HEN-FPAD\DESIGN Kyocera CS 6002i KX

J:\FORCE 12\2012 TEXAS DEPARTMENT OF INSURANCE\F12-SERIES-100-DIAMOND_SCREEN\F12-SERIES 100-DIAMOND SCREEN.dwg, 4/8/2020 1:54:46 PM, \\HEN-FPAD\DESIGN Kyocera CS 6002i KX

MAXIMUM ALLOWABLE PRESSURES

DIRECT MOUNT NON-ZIPPER

WOOD	CONCRETE	HOLLOW CONCRETE BLOCK
-60.0 PSF & -69.0 PSF +60.0 PSF & +69.0 PSF	-72.0 PSF & -66.0 PSF +72.0 PSF & +66.0 PSF	-61.0 PSF +61.0 PSF

MAXIMUM ALLOWABLE SPAN

WOOD	CONCRETE & HOLLOW CONCRETE BLOCK
9'-2"	9'-4"

MINIMUM ALLOWABLE WIDTH (NON-SPAN DIMESION) 12.0"
MINIMUM ALLOWABLE SPAN: 12.0"

MAXIMUM ALLOWABLE PRESSURES

DIRECT MOUNT ZIPPER

WOOD	CONCRETE	HOLLOW CONCRETE BLOCK
-60.0 PSF & -60.0 PSF +60.0 PSF & +60.0 PSF	-60.0 PSF & -60.0 PSF +60.0 PSF & +60.0 PSF	-60.0 PSF +60.0 PSF

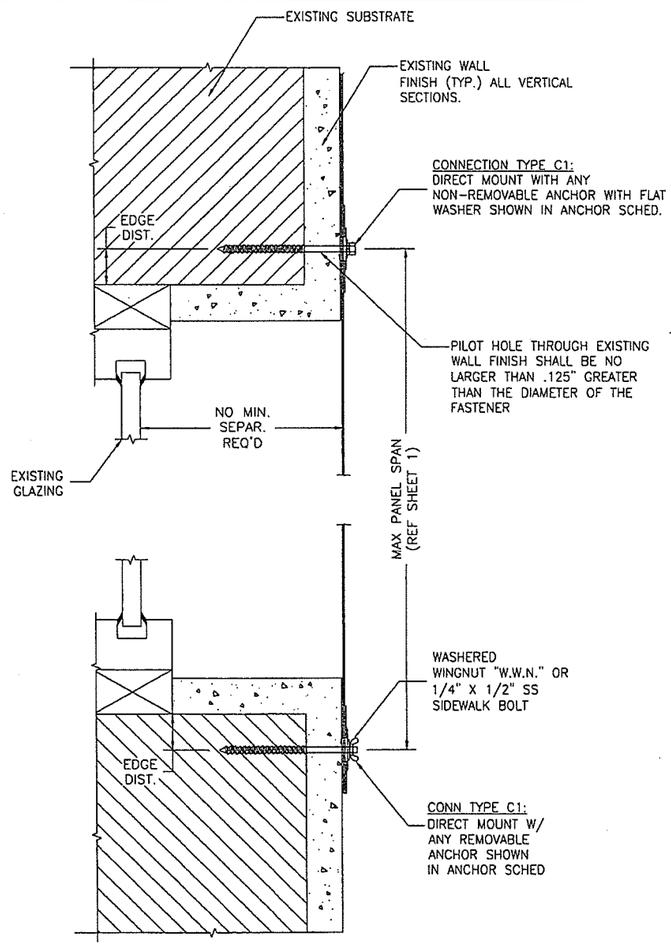

1.0 DETAIL A-A: MOUNTING SECTION
SCALE: NTS=1'-0"

WOOD FRAME

HOST STRUCTURE	ANCHOR	LOAD (psf)	3/4" MIN EDGE DISTANCE (UNLESS NOTED OTHERWISE) SPANS UP TO 4'-2" CONN TYPE C1	SPANS UP TO 6'-2" CONN TYPE C1	SPANS UP TO 9'-2" CONN TYPE C1
WOOD	#14 WOOD SCREW WITH MIN. 1-1/2" MIN. EMBED	28	18"	18"	18"
		38	18"	18"	14"
		47	18"	16"	12"
		54	18"	15"	11"
		60	18"	14"	10"
	1/4" TAPCON (ELCO) 1-1/2" MIN EMBED	21	12"	12"	12"
		28	12"	12"	10"
		47	12"	9"	7"
		54	10"	8"	6"
		60	10"	7"	6"
	1/4" ELCO PANELMATE (MALE) WITH 1-1/2" MIN EMBED	21	12"	12"	12"
		38	12"	11"	9"
		47	12"	10"	7"
		54	12"	9"	7"
		60	11"	8"	6"
	1/4" ELCO PANELMATE (FEMALE) WITH 1-1/2" MIN. EMBED	24	12"	12"	12"
		38	12"	11"	9"
		47	12"	10"	7"
		54	12"	9"	7"
		69	10"	7"	6"
	3/16" SAMMY HURRICANE FASTENER WITH 1/4" X 20 INTERNAL THREAD.1-1/2" MIN. EMBED	24	12"	12"	12"
		38	12"	12"	9"
		47	12"	11"	8"
		54	12"	10"	7"
		69	11"	8"	6"

ANCHOR SCHEDULE 1

CONCRETE (3200 psi)

HOST STRUCTURE	ANCHOR	LOAD (psf)	2" MIN EDGE DISTANCE (UNLESS NOTED OTHERWISE) SPANS UP TO 4'-4" CONN TYPE C1	SPANS UP TO 6'-4" CONN TYPE C1	SPANS UP TO 9'-4" CONN TYPE C1
CONCRETE	1/4" TAPCON (ELCO) WITH 1-3/4" EMBED (3200psi MIN CONC)	29	12"	12"	12"
		38	12"	12"	9"
		47	12"	11"	8"
		54	12"	10"	7"
		72	10"	8"	6"
	1/4" ELCO PANELMATE (MALE) WITH 1-3/4" MIN. EMBED (3200psi MIN CONC)	25	12"	12"	12"
		38	12"	12"	9"
		47	12"	10"	7"
		54	12"	9"	6"
		66	10"	8"	6"
	1/4-20 ALL POINTS SOLID-SET ANCHOR w/ 7/8" MIN EMBED (3200psi MIN CONC)	25	18"	18"	18"
		29	18"	18"	16"
		47	18"	15"	11"
		54	18"	13"	10"
		72	14"	11"	8"
	1/4" ELCO PANELMATE (FEMALE) WITH 1-1/4" MIN. EMBED	26	12"	12"	12"
		36	12"	12"	9"
		47	12"	10"	7"
		54	12"	9"	6"
		66	10"	8"	6"
	1/4" SAMMY HURRICANE FASTENER WITH 1/4" X 20 INTERNAL THREAD.1-1/4" MIN. EMBED	26	12"	12"	12"
		36	12"	12"	11"
		47	12"	12"	9"
		54	12"	11"	8"
		66	12"	9"	6"

ANCHOR SCHEDULE 2

HOLLOW CONCRETE BLOCK

HOST STRUCTURE	ANCHOR	LOAD (psf)	2" MIN EDGE DISTANCE (UNLESS NOTED OTHERWISE) SPANS UP TO 4'-4" CONN TYPE C1	SPANS UP TO 6'-4" CONN TYPE C1	SPANS UP TO 9'-4" CONN TYPE C1
HOLLOW BLOCK	1/4" ELCO PANELMATE (MALE) WITH 1-1/4" MIN EMBED	22	10"	10"	10"
		38	10"	8"	6"
		47	10"	7"	5"
		54	9"	6"	5"
		61	8"	6"	4"
	1/4-20 ALL POINTS SOLID-SET ANCHOR WITH MIN 7/8" EMBEDMENT	22	12"	12"	12"
		38	12"	11"	8"
		47	12"	9"	7"
		54	11"	8"	6"
		61	10"	7"	6"
	1/4" ELCO PANELMATE (FEMALE) WITH 1-1/4" MIN. EMBED	18	10"	10"	10"
		36	10"	8"	6"
		47	9"	6"	5"
		54	8"	6"	4"
		61	7"	5	4"
	1/4" SAMMY HURRICANE FASTENER WITH 1/4" X 20 INTERNAL THREAD.1-1/4" MIN. EMBED	18	10"	10"	10"
		36	10"	8"	6"
		47	9"	6"	5"
		54	8"	6"	4"
		61	7"	5	4"

ANCHOR SCHEDULE 3

ANCHOR SCHEDULE NOTES

1) 1/4" TAPCONS SHALL BE BY ELCO, AS LISTED IN APPROPRIATE ANCHOR SCHEDULE. "ELCO PANELMATE" ANCHORS MAY BE MALE OR FEMALE, AS ILLUSTRATED.

2) ENSURE MINIMUM EDGE DISTANCE FOR ALL ANCHORS PER RESPECTIVE ANCHOR SCHEDULE. EDGE DISTANCE OF 3/4" IS ACCEPTABLE FOR ANCHORS TO WOOD. REFERENCE ANCHOR SCHEDULE FOR MINIMUM EDGE DISTANCE REQUIREMENTS FOR THESE ANCHORS.

3) MINIMUM EMBEDMENT SHALL BE AS NOTED IN ANCHOR SCHEDULE. MINIMUM EMBEDMENT AND EDGE DISTANCE EXCLUDES STUCCO, FOAM, BRICK, AND OTHER WALL FINISHES.

4) ANCHORS SHALL BE INSTALLED IN ACCORDANCE WITH MANUFACTURER RECOMMENDATIONS.

5) WHERE EXISTING STRUCTURE IS WOOD FRAMING, EXISTING CONDITIONS MAY VARY. FIELD VERIFY THAT ANCHORS ARE INTO ADEQUATE WOOD FRAMING MEMBERS, NOT INTO PLYWOOD.

6) ANCHORS FASTENED TO NARROW FACE OF STUD FRAMING SHALL BE LOCATED IN CENTER OF NOMINAL 2x4 (MIN) WOOD STUD (i.e. 3/ 4" EDGE DISTANCE IS ACCEPTABLE FOR ANCHORS TO WOOD FRAMING). WOOD STRUCTURE SHALL BE "SOUTHERN PINE" G=0.55 OR GREATER DENSITY.

7) ANCHOR SCHEDULE APPLIES FOR ALL PRODUCTS CERTIFIED HEREIN, BUT ONLY PROVIDES MAXIMUM ALLOWABLE ANCHOR SPACING. MAXIMUM ALLOWABLE SPANS AND PRESSURES INDICATED IN SPAN SCHEDULE SHALL APPLY.

8) MACHINE SCREWS SHALL HAVE MINIMUM OF 1/ 4" ENGAGEMENT OF THREADS IN BASE ANCHOR AND MAY HAVE A PAN HEAD, TRUSS HEAD, OR WAFER HEAD' ("SIDEWALK BOLT") U.N.O.

9) ✳ DESIGNATES ANCHORS WHICH ARE REMOVABLE AND MAY BE USED FOR DIRECT MOUNT INSTALLATIONS.

James R. Bailey
4/9/20
STATE OF TEXAS
JAMES R. BAILEY
74911
LICENSED
PROFESSIONAL ENGINEER

Hendee Enterprises, Inc.
The Innovative Solutions Company
P.O. Box 4249, Houston, TX 77210-4249 9350 South Point Dr., Houston, TX 77054
(713) 795-2321, Fax (713) 798-0494, (800) 231-7275 (Nat'l), (800) 323-2841 (Texas)

EXPORT WARNING:
EXPORT OF THIS DOCUMENT TO COUNTRIES OUTSIDE OF THE U.S. IS SUBJECT TO U.S. EXPORT ADMINISTRATION REGULATIONS.

COPYRIGHT
COPYRIGHT © 2002
HENDEE ENTERPRISES INC.
ALL RIGHTS RESERVED

CONSULTANTS:
James R. Bailey, P.E.
Texas PE # 74911
Platinum Risk Consulting LLC
4931 Chappel Hill Dr.
Missouri City, Texas 77459
281-403-2825
Texas Firm # 11044

CLIENT: HENDEE ENTERPRISES
LOCATION: HOUSTON, TX
TITLE: FORCE 12 - SERIES 100 - DIAMOND SCREEN
DATE: 10/31/12
REVISION: 0

BY:	REV	DATE	DESCRIPTION
KLL	0	10/31/12	TEXAS DEPARTMENT OF INSURANCE SUBMITTAL

THIS DOCUMENT, CONTAINING CONTENTS, AND TRADE SECRET INFORMATION, IS THE PROPERTY OF HENDEE ENTERPRISES, INC. IT IS LOANED TO THE RECIPIENT AND MUST BE RETURNED UPON REQUEST. IT MUST NOT BE REPRODUCED, IN WHOLE OR IN PART, OR OTHERWISE DISCLOSED, EXCEPT TO THE RECIPIENT'S EMPLOYEES WHO HAVE A NEED TO KNOW THE CONTENTS OF THE DOCUMENT. THE RECIPIENT AGREES TO USE THE DOCUMENT ONLY FOR THE PURPOSE FOR WHICH IT WAS LOANED AND TO HOLD THE DOCUMENT IN STRICT CONFIDENCE. THE RECIPIENT AGREES NOT TO MAKE ANY COPIES OF THE DOCUMENT OR REMOVE IT FROM THE PREMISES OF THE RECIPIENT'S ORGANIZATION WITHOUT THE PRIOR WRITTEN CONSENT OF HENDEE ENTERPRISES, INC. THE RECIPIENT AGREES TO NOTIFY HENDEE ENTERPRISES, INC. IMMEDIATELY IF IT IS UNABLE TO COMPLY WITH THE RESTRICTIONS ON ACCESS, USE, OR DISCLOSURE WITHIN THIS AGREEMENT, IN WHICH EVENT THE RECIPIENT MUST IMMEDIATELY RETURN THE DOCUMENT, ALL COPIES THEREOF, AND ALL MATERIAL OWNED PREVIOUS TO HENDEE ENTERPRISES, INC.

CHECKED BY:	
DRAWN BY:	PAR
FILE NAME:	F-12 DIAMOND
JOB NUMBER:	DES07
DOCUMENT DATE:	07/26/07

SHEET: 3.0

MAXIMUM ALLOWABLE PRESSURES

TRACK MOUNT ZIPPER

WOOD	CONCRETE	HOLLOW CONCRETE BLOCK
-60.0 PSF & -60.0 PSF +60.0 PSF & +60.0 PSF	-60.0 PSF & -60.0 PSF +60.0 PSF & +60.0 PSF	-60.0 PSF +60.0 PSF

MAXIMUM ALLOWABLE PRESSURES

TRACK MOUNT NON-ZIPPER

WOOD	CONCRETE	HOLLOW CONCRETE BLOCK
-68.0 PSF & +68.0 PSF	-66.0 PSF & +66.0 PSF	-63.0 PSF & +63.0 PSF

MAXIMUM ALLOWABLE SPAN

WOOD	CONCRETE	HOLLOW CONCRETE BLOCK
9'-3"	9'-4"	9'-3"

MINIMUM ALLOWABLE WIDTH (NON-SPAN DIMESION) 12.0"
MINIMUM ALLOWABLE SPAN: 12.0"

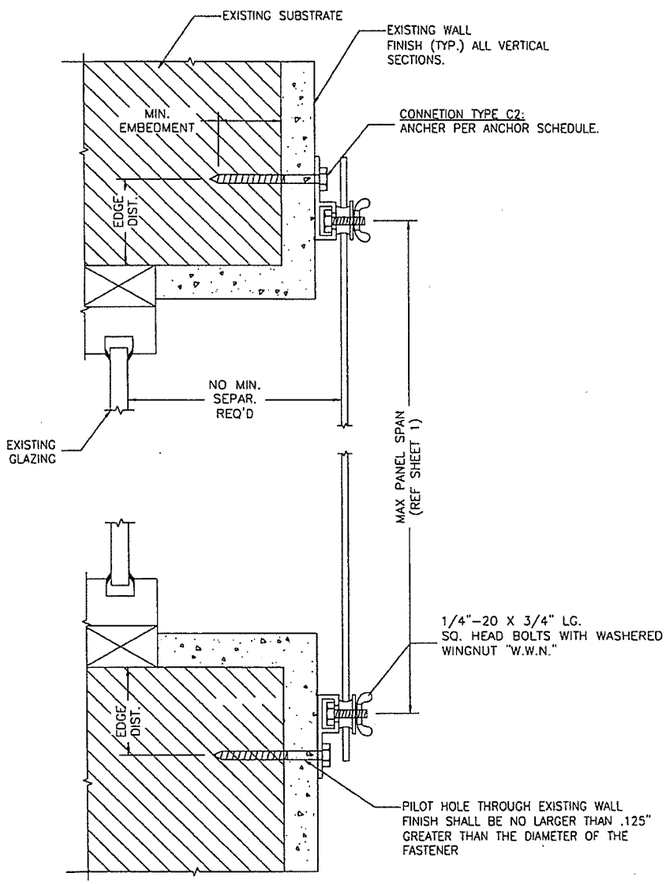

1.0 DETAIL A-A: MOUNTING SECTION
SCALE: NTS=1'-0"

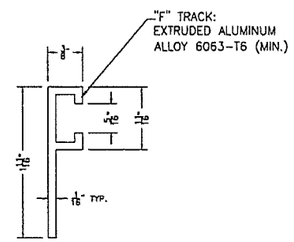

2.0 "F" TRACK
SCALE: NTS=1'-0"

WOOD FRAME

HOST STRUCTURE	ANCHOR	LOAD (psf)	3/4" MIN EDGE DISTANCE (UNLESS NOTED OTHERWISE) SPANS UP TO 4'-3" CONN TYPE C2	SPANS UP TO 6'-3" CONN TYPE C2	SPANS UP TO 9'-3" CONN TYPE C2
WOOD	#14 WOOD SCREW WITH MIN. 1-1/2" MIN. EMBED	23	14"	14"	14"
		37	14"	13"	10"
		44	14"	11"	9"
		52	13"	10"	8"
		68	11"	8"	6"
	1/4"-20 X 3/4" SQ.. HEAD THREADED STUD. WITH WASHER WING NUT SET INSIDE "F" TRACK.	23	12"	12"	12"
		36	12"	11"	9"
		44	12"	10"	8"
		52	12"	9"	7"
		68	10"	7"	6"

ANCHOR SCHEDULE 1-A

CONCRETE (3200 psi)

HOST STRUCTURE	ANCHOR	LOAD (psf)	2" MIN EDGE DISTANCE (UNLESS NOTED OTHERWISE) SPANS UP TO 4'-4" CONN TYPE C2	SPANS UP TO 6'-4" CONN TYPE C2	SPANS UP TO 9'-4" CONN TYPE C2
CONCRETE	1/4" TAPCON (ELCO) WITH 1-3/4" EMBED (3200psi MIN CONC)	23	14"	14"	14"
		36	14"	13"	10"
		43	14"	12"	9"
		53	13"	10"	7"
		66	11"	8"	6"
	1/4"-20 X 3/4" SQ.. HEAD THREADED STUD. WITH WASHER WING NUT SET INSIDE "F" TRACK.	23	12"	12"	12"
		36	12"	11"	9"
		43	12"	10"	8"
		53	11"	9"	7"
		66	10"	8"	6"

ANCHOR SCHEDULE 2-A

HOLLOW CONCRETE BLOCK

HOST STRUCTURE	ANCHOR	LOAD (psf)	2-1/2" MIN EDGE DISTANCE (UNLESS NOTED OTHERWISE) SPANS UP TO 4'-3" CONN TYPE C2	SPANS UP TO 6'-3" CONN TYPE C2	SPANS UP TO 9'-3" CONN TYPE C2
HOLLOW BLOCK	1/4" TAPCON (ELCO) WITH 1-1/4" EMBED (1500psi MIN CONC. BLOCK)	23	11"	11"	11"
		36	11"	11"	8"
		42	11"	9"	7"
		50	11"	8"	6"
		63	9"	6"	5"
	1/4"-20 X 3/4" SQ.. HEAD THREADED STUD. WITH WASHER WING NUT SET INSIDE "F" TRACK.	23	12"	12"	12"
		36	12"	11"	9"
		42	12"	10"	8"
		50	12"	9"	7"
		63	10"	8"	6"

ANCHOR SCHEDULE 3-A

NOTE: ANCHOR SCHEDULE NOTES, SEE SHEET 3.0

James R. Bailey
4/19/20

STATE OF TEXAS
JAMES R. BAILEY
74911
LICENSED
PROFESSIONAL ENGINEER

Hendee Enterprises, Inc.
The Innovative Solutions Company
P.O. Box 4785, Houston, TX 77210-4785 5765 South Park Dr., Houston, TX 77074
(713) 796-2325, Fax (713) 796-2494, (800) 231-2325 (Nat'l), (800) 222-3541 (Texas)

EXPORT WARNING: EXPORT OF THIS DOCUMENT TO COUNTRIES OUTSIDE OF THE UNITED STATES IS SUBJECT TO U.S. EXPORT ADMINISTRATION REGULATIONS.

COPYRIGHT: COPYRIGHT © 2002 HENDEE ENTERPRISES, INC. ALL RIGHTS RESERVED

CONSULTANTS:
James R. Bailey, P.E.
Texas PE # 74911
Platinum Risk Consulting LLC
4931 Chappel Hill Dr.
Missouri City, Texas 77459
281-403-2825
Texas Firm # 11044

CLIENT: HENDEE ENTERPRISES
LOCATION: HOUSTON, TX
TITLE: FORCE 12 - SERIES 100 - DIAMOND SCREEN
DATE: 10/31/12
REVISION: 0

BY:	REV:	DATE	DESCRIPTION
KLL	0	10/31/12	TEXAS DEPARTMENT OF INSURANCE SUBMITTAL

THIS DOCUMENT, CONTAINING CONFIDENTIAL AND TRADE SECRET INFORMATION, IS THE PROPERTY OF HENDEE ENTERPRISES, INC. AND IS SUBMITTED TO ITS RECIPIENT SUBJECT TO THE AGREEMENT OF THE RECIPIENT TO HOLD IT IN CONFIDENCE, TO USE IT SOLELY FOR EVALUATION PURPOSES, TO NOT REPRODUCE, OR ALLOW TO BE REPRODUCED, IT, IN WHOLE OR IN PART, EXCEPTIN THE EVALUATION PROCESS, TO NOT DISCLOSE IT OR ANY INFORMATION CONTAINED IN IT TO ANY THIRD PARTY WITHOUT THE PRIOR WRITTEN CONSENT OF HENDEE ENTERPRISES, INC., IF ANY, (2) NOT USE THE DOCUMENT OR ANY COPY THEREOF IN THE EVALUATION OF, OR AS A BASIS FOR, OR TO ASSIST IN THE PREPARATION OF, OR OTHERWISE IN CONNECTION WITH, THE DESIGN, MANUFACTURE, OR SALE OF ANY PRODUCT OR SERVICE SIMILAR TO OR COMPETITIVE WITH THE PRODUCT OR SERVICE TO WHICH THE DOCUMENT OR THE CONFIDENTIAL OR TRADE SECRET INFORMATION INDICATES, AND (3) UPON COMPLETION OF THE ABOVE-STATED PURPOSE, RETURN TO HENDEE ENTERPRISES, INC. THE DOCUMENT AND ALL COPIES THEREOF, AND ALL WORKS, COPIES THEREFROM TO HENDEE ENTERPRISES, INC.

CHECKED BY:	
DRAWN BY:	PAR
FILE NAME:	F-12 DIAMOND
JOB NUMBER:	DES07
DOCUMENT DATE:	07/26/07

SHEET: 4.0

J:\FORCE 12\2012 TEXAS DEPARTMENT OF INSURANCE\F12-SERIES-100-DIAMOND_SCREEN\F12-SERIES 100-DIAMOND SCREEN.dwg, 4/8/2020 1:55:01 PM, \\HEN-FPAD\DESIGN Kyocera CS 6002i XX

MAXIMUM ALLOWABLE PRESSURES

TRACK MOUNT ZIPPER

WOOD	CONCRETE	HOLLOW CONCRETE BLOCK
−60.0 PSF & −60.0 PSF +60.0 PSF & +60.0 PSF	−60.0 PSF & −60.0 PSF +60.0 PSF & +60.0 PSF	−60.0 PSF +60.0 PSF

MAXIMUM ALLOWABLE PRESSURES

TRACK MOUNT NON−ZIPPER

WOOD	CONCRETE	HOLLOW CONCRETE BLOCK
−68.0 PSF & +68.0 PSF	−66.0 PSF & +66.0 PSF	−63.0 PSF & +63.0 PSF

MAXIMUM ALLOWABLE SPAN

WOOD	CONCRETE	HOLLOW CONCRETE BLOCK
9'−3"	9'−4"	9'−3"

MINIMUM ALLOWABLE WIDTH (NON−SPAN DIMESION) 12.0"
MINIMUM ALLOWABLE SPAN: 12.0"

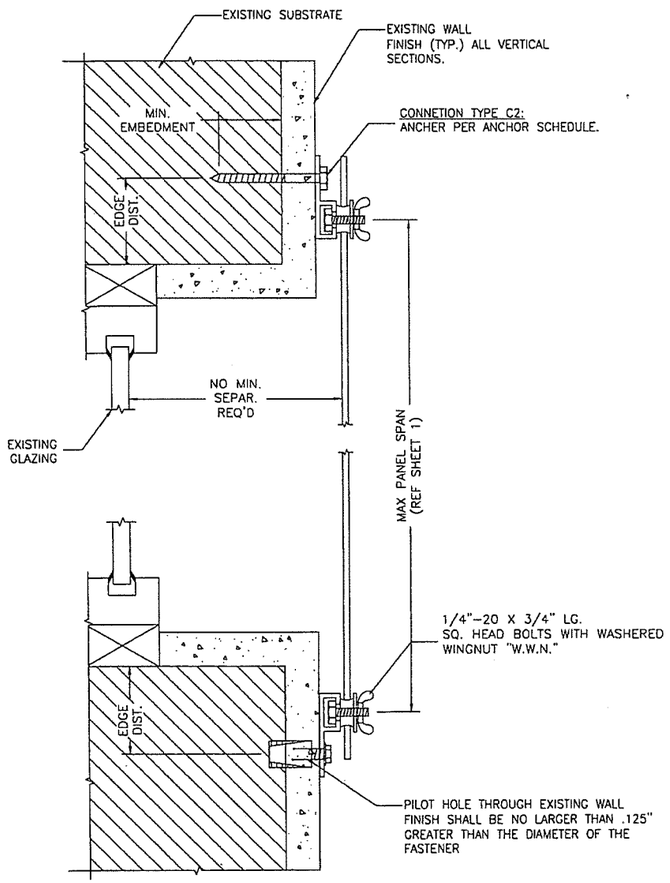

1.0 DETAIL A−A: MOUNTING SECTION
SCALE: NTS=1'−0"

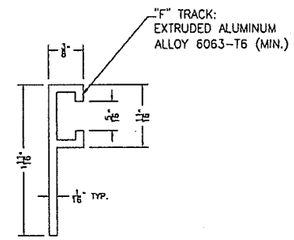

2.0 "F" TRACK
SCALE: NTS=1'−0"

CONCRETE (3200 psi)

HOST STRUCTURE	ANCHOR	LOAD (psf)	2" MIN EDGE DISTANCE (UNLESS NOTED OTHERWISE) SPANS UP TO 4'−4" CONN TYPE C1	SPANS UP TO 6'−4" CONN TYPE C1	SPANS UP TO 9'−4" CONN TYPE C1
CONCRETE	1/4−20 ALL POINTS SOLID−SET ANCHOR w/ 7/8" MIN EMBED (3200psi MIN CONC)	25	18"	18"	18"
		29	18"	18"	16"
		47	18"	15"	11"
		54	18"	13"	10"
		72	14"	11"	8"
	1/4" ELCO PANELMATE (FEMALE) WITH 1−1/4" MIN. EMBED	26	12"	12"	12"
		36	12"	12"	9"
		47	12"	10"	7"
		54	12"	9"	6"
		66	10"	8"	6"

ANCHOR SCHEDULE 2

HOLLOW CONCRETE BLOCK

HOST STRUCTURE	ANCHOR	LOAD (psf)	2" MIN EDGE DISTANCE (UNLESS NOTED OTHERWISE) SPANS UP TO 4'−4" CONN TYPE C1	SPANS UP TO 6'−4" CONN TYPE C1	SPANS UP TO 9'−4" CONN TYPE C1
HOLLOW BLOCK	1/4−20 ALL POINTS SOLID−SET ANCHOR WITH MIN 7/8" EMBEDMENT	22	12"	12"	12"
		38	12"	11"	8"
		47	12"	9"	7"
		54	11"	8"	6"
		61	10"	7"	6"
	1/4" ELCO PANELMATE (FEMALE) WITH 1−1/4" MIN. EMBED	18	10"	10"	10"
		36	10"	8"	6"
		47	9"	6"	5"
		54	8"	6"	4"
		61	7"	5	4"

ANCHOR SCHEDULE 3

NOTE: ANCHOR SCHEDULE NOTES, SEE SHEET 3.0

James R. Bailey
4/19/20

STATE OF TEXAS
JAMES R. BAILEY
74911
LICENSED
PROFESSIONAL ENGINEER

Hendee Enterprises, Inc.
The Innovative Solutions Company
P.O. Box 4189, Houston, TX 77210−4189 9550 South Post Oak, Houston, TX 77036
(713) 796−2222, Fax (713) 796−6404, (800) 231−2323 (toll), (800) 231−3441 (Fax)

EXPORT WARNING:
EXPORT OF THIS DOCUMENT TO COUNTRIES OUTSIDE OF THE SUBJECT TO U.S. EXPORT ADMINISTRATION REGULATIONS.

COPYRIGHT
COPYRIGHT © 2002
HENDEE ENTERPRISES INC.
ALL RIGHTS RESERVED

CONSULTANTS:
James R. Bailey, P.E.
Texas PE # 74911
Platinum Risk Consulting LLC
4931 Chappel Hill Dr.
Missouri City, Texas 77459
281−403−2825
Texas Firm # 11044

CLIENT: HENDEE ENTERPRISES
LOCATION: HOUSTON, TX
TITLE: FORCE 12 − SERIES 100 − DIAMOND SCREEN
DATE: 10/31/12
REVISION: 0

BY:	REV	DATE	DESCRIPTION
KLL	0	10/31/12	TEXAS DEPARTMENT OF INSURANCE SUBMITTAL

THIS DOCUMENT, CONTAINING CONFIDENTIAL AND TRADE SECRET INFORMATION, IS THE PROPERTY OF HENDEE ENTERPRISES, INC. AND IS EXPRESSLY TO BE RECEIVED BY RECIPIENT AND DELIVERED UPON DEMAND OR ACCEPTANCE OF PROPOSAL OR ORDER. THE RECIPIENT AGREES TO MAINTAIN IN CONFIDENCE ALL INFORMATION CONTAINED HEREIN AND THAT IT WILL (1) NOT USE THE DOCUMENT OR ANY PART THEREOF IN THE CONSTRUCTION OF ANY PERMANENT OR TEMPORARY STRUCTURE OR FOR ANY PURPOSE OTHER THAN THE EVALUATION OF THE DOCUMENT OR THE CONSTRUCTION OF THE STRUCTURE FOR WHICH IT WAS ISSUED; (2) NOT REPRODUCE THE DOCUMENT OR ANY PART THEREOF IN ANY FORM WITHOUT THE PRIOR WRITTEN CONSENT OF HENDEE ENTERPRISES, INC.; (3) NOT DISCLOSE THE DOCUMENT OR ANY PART THEREOF TO ANY OTHER PERSON OR ENTITY WITHOUT THE PRIOR WRITTEN CONSENT OF HENDEE ENTERPRISES, INC.; (4) UPON COMPLETION OF THE INTENDED USE, RETURN THE DOCUMENT TO HENDEE ENTERPRISES, INC. UPON THE DEMAND; ALL DAMAGES, AND ALL RIGHTS, ARE RESERVED THEREUNDER TO HENDEE ENTERPRISES, INC.

CHECKED BY:	
DRAWN BY:	PAR
FILE NAME:	F−12 DIAMOND
JOB NUMBER:	DES07
DOCUMENT DATE:	07/26/07

SHEET: 5.0

J:\FORCE 12\2012 TEXAS DEPARTMENT OF INSURANCE\F12-SERIES-100-DIAMOND_SCREEN\F12-SERIES 100-DIAMOND SCREEN.dwg, 4/8/2020 1:55:17 PM, \\HEN-FPAD\DESIGN Kyocera CS 6002i.KX

MAXIMUM ALLOWABLE PRESSURES

TRACK MOUNT ZIPPER

CONCRETE	HOLLOW CONCRETE BLOCK
-60.0 PSF & -60.0 PSF +60.0 PSF & +60.0 PSF	-54.0 PSF +54.0 PSF

MAXIMUM ALLOWABLE PRESSURES

TRACK MOUNT NON-ZIPPER

CONCRETE	HOLLOW CONCRETE BLOCK
-66.0 PSF & +66.0 PSF	-54.0 PSF & +54.0 PSF

MAXIMUM ALLOWABLE SPAN

CONCRETE	HOLLOW CONCRETE BLOCK
9'-4"	9'-4"

MINIMUM ALLOWABLE WIDTH (NON-SPAN DIMESION) 12.0"
MINIMUM ALLOWABLE SPAN: 12.0"

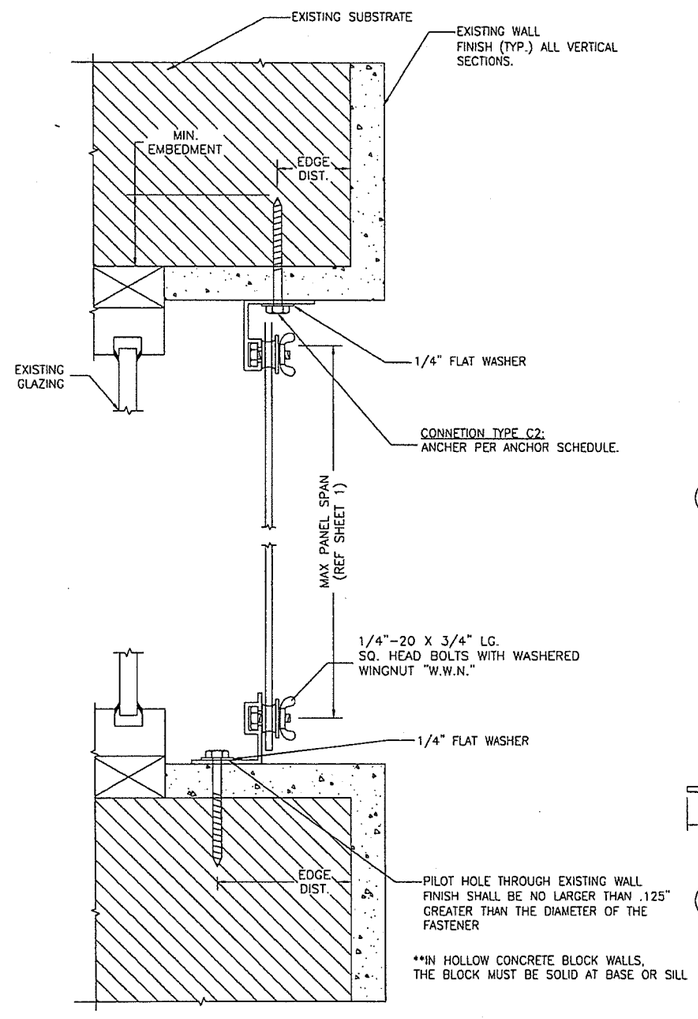

1.0 DETAIL A-A: MOUNTING SECTION
SCALE: NTS=1'-0"

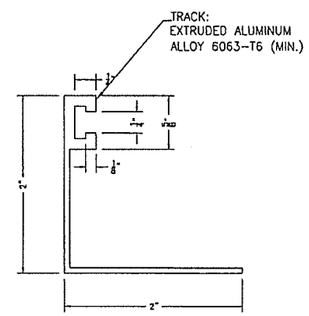

2.0 STUDLESS ANGLE TRACK
SCALE: NTS=1'-0"

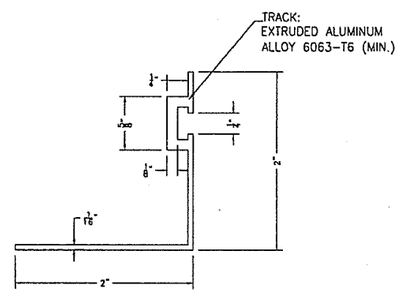

3.0 REVERSE F TRACK
SCALE: NTS=1'-0"

CONCRETE (3200 psi)

	UNIFORM LOAD (psf)	2" MIN EDGE DISTANCE (UNLESS NOTED OTHERWISE)		
		SPANS UP TO 4'-4" CONN TYPE C2	SPANS UP TO 6'-4" CONN TYPE C2	SPANS UP TO 9'-4" CONN TYPE C2
1/4" TAPCON (ELCO) WITH 1-3/4" EMBED AND 1/4" FLAT SS WASHER (3200psi MIN CONC)	23	14"	14"	14"
	36	14"	14"	11"
	43	14"	13"	9"
	53	13"	11"	8"
	66	11"	9"	6"
1/4"-20 X 3/4" SQ.. HEAD THREADED STUD. WITH WASHER WING NUT SET INSIDE "F" TRACK.	23	12"	12"	12"
	36	12"	11"	9"
	43	12"	10"	8"
	53	11"	9"	7"
	66	10"	8"	6"

ANCHOR SCHEDULE 2-B

HOLLOW CONCRETE BLOCK

	UNIFORM LOAD (psf)	2-1/2" MIN EDGE DISTANCE (UNLESS NOTED OTHERWISE)		
		SPANS UP TO 4'-4" CONN TYPE C2	SPANS UP TO 6'-4" CONN TYPE C2	SPANS UP TO 9'-4" CONN TYPE C2
1/4" TAPCON (ELCO) WITH 1-1/4" EMBED AND 1/4" FLAT SS WASHER (1500psi MIN CONC. BLOCK)	18	11"	11"	11"
	28	11"	10"	8"
	34	11"	9"	7"
	42	10"	8"	6"
	54	8"	6"	5"
1/4"-20 X 3/4" SQ.. HEAD THREADED STUD. WITH WASHER WING NUT SET INSIDE "F" TRACK.	18	12"	12"	12"
	28	12"	12"	10"
	34	12"	12"	9"
	42	12"	10"	8"
	54	11"	9"	7"

ANCHOR SCHEDULE 3-B

NOTE: ANCHOR SCHEDULE NOTES, SEE SHEET 3.0

James R. Bailey
4/19/20
STATE OF TEXAS
JAMES R. BAILEY
74911
LICENSED
PROFESSIONAL ENGINEER

Hendee Enterprises, Inc.
The Innovative Solutions Company
P.O. Box 4289, Houston, TX 77210-4289 9350 South Point Dr., Houston, TX 77054
(713) 796-2321, Fax (713) 796-0494, (800) 231-2321 (Voice), (800) 333-3841 (Fax)

EXPORT WARNING:
EXPORT OF THIS DOCUMENT TO COUNTRIES OUTSIDE OF THE U.S. IS SUBJECT TO U.S. EXPORT ADMINISTRATION REGULATIONS.

COPYRIGHT
COPYRIGHT © 2002
HENDEE ENTERPRISES INC.
ALL RIGHTS RESERVED

CONSULTANTS:
James R. Bailey, P.E.
Texas P.E.# 74911
Platinum Risk Consulting LLC
4931 Chappel Hill Dr.
Missouri City, Texas 77459
281-403-2825
Texas Firm # 11044

CLIENT: HENDEE ENTERPRISES
LOCATION: HOUSTON, TX
TITLE: FORCE 12 - SERIES 100 - DIAMOND SCREEN
DATE: 10/31/12
REVISION: 0

BY:	REV	DATE	DESCRIPTION
KLL	0	10/31/12	TEXAS DEPARTMENT OF INSURANCE SUBMITTAL

THE DOCUMENT, DRAWING, CONFIDENTIAL AND TRADE SECRET INFORMATION, IS THE PROPERTY OF HENDEE ENTERPRISES, INC. AND IS GIVEN TO THE RECIPIENT IN CONFIDENCE. THE RECIPIENT BY ACCEPTING THIS DOCUMENT IN HENDEE ENTERPRISES, INC. AGREES (1) NOT TO DISCLOSE OR ANY COPY THEREOF OR THE CONFIDENTIAL OR TRADE SECRET INFORMATION CONTAINED THEREIN TO ANY THIRD PARTY WITHOUT THE PRIOR WRITTEN CONSENT OF HENDEE ENTERPRISES, INC.; (2) NOT USE THE DOCUMENT OR ANY COPY THEREOF OR THE CONFIDENTIAL OR TRADE SECRET INFORMATION CONTAINED THEREIN FOR ANY PURPOSE OTHER THAN THE PURPOSE FOR WHICH IT IS GIVEN; AND (3) UPON COMPLETION OF THE NEED FOR THE DOCUMENT, TO RETURN THE DOCUMENT, ALL COPIES THEREOF, AND ALL MATERIAL COPIES PREPARED TO HENDEE ENTERPRISES, INC.

CHECKED BY:
DRAWN BY: PAR
FILE NAME: F-12 DIAMOND
JOB NUMBER: DES07
DOCUMENT DATE: 07/26/07

SHEET: 6.0

J:\FORCE 12\2012 TEXAS DEPARTMENT OF INSURANCE\F12-SERIES-100-DIAMOND_SCREEN\F12-SERIES 100-DIAMOND SCREEN.dwg, 4/8/2020 1:55:29 PM, \\HEN-FPAD\DESIGN Kyocera CS 6002i KX

MAXIMUM ALLOWABLE PRESSURES

TRACK MOUNT ZIPPER

CONCRETE	HOLLOW CONCRETE BLOCK
-60.0 PSF & -60.0 PSF +60.0 PSF & +60.0 PSF	-54.0 PSF +54.0 PSF

MAXIMUM ALLOWABLE PRESSURES

TRACK MOUNT NON-ZIPPER

CONCRETE	HOLLOW CONCRETE BLOCK
-66.0 PSF & +66.0 PSF	-54.0 PSF & +54.0 PSF

MAXIMUM ALLOWABLE SPAN

CONCRETE	HOLLOW CONCRETE BLOCK
9'-4"	9'-4"

MINIMUM ALLOWABLE WIDTH (NON-SPAN DIMESION) 12.0"
MINIMUM ALLOWABLE SPAN: 12.0"

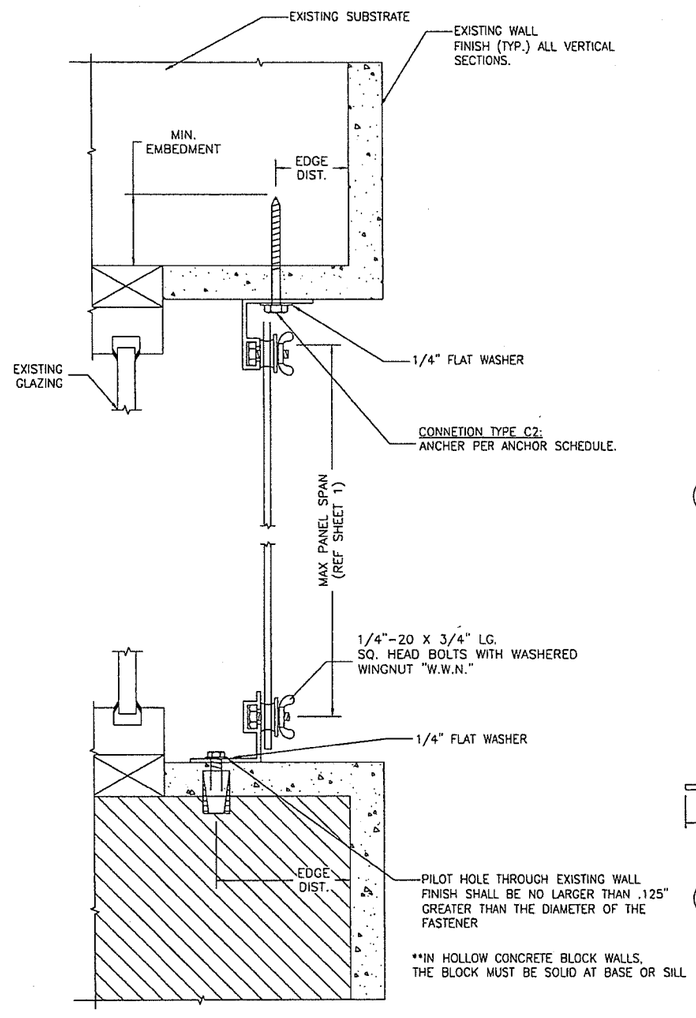

1.0 DETAIL A-A: MOUNTING SECTION
SCALE: NTS=1'-0"

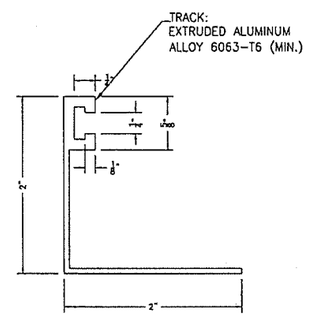

2.0 STUDLESS ANGLE TRACK
SCALE: NTS=1'-0"

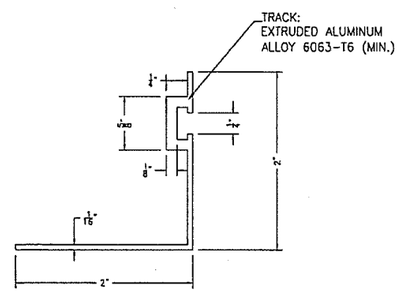

3.0 REVERSE F TRACK
SCALE: NTS=1'-0"

CONCRETE (3200 psi)

HOST STRUCTURE	ANCHOR	LOAD (psf)	2" MIN EDGE DISTANCE (UNLESS NOTED OTHERWISE) SPANS UP TO 4'-4" CONN TYPE C1	SPANS UP TO 6'-4" CONN TYPE C1	SPANS UP TO 9'-4" CONN TYPE C1
CONCRETE	1/4-20 ALL POINTS SOLID-SET ANCHOR w/ 7/8" MIN EMBED (3200psi MIN CONC)	25	18"	18"	18"
		29	18"	18"	16"
		47	18"	15"	11"
		54	18"	13"	10"
		72	14"	11"	8"
	1/4" ELCO PANELMATE (FEMALE) WITH 1-1/4" MIN. EMBED	26	12"	12"	12"
		36	12"	12"	9"
		47	12"	10"	7"
		54	12"	9"	6"
		66	10"	8"	6"

ANCHOR SCHEDULE 2

HOLLOW CONCRETE BLOCK

HOST STRUCTURE	ANCHOR	LOAD (psf)	2" MIN EDGE DISTANCE (UNLESS NOTED OTHERWISE) SPANS UP TO 4'-4" CONN TYPE C1	SPANS UP TO 6'-4" CONN TYPE C1	SPANS UP TO 9'-4" CONN TYPE C1
HOLLOW BLOCK	1/4-20 ALL POINTS SOLID-SET ANCHOR WITH MIN 7/8" EMBEDMENT	22	12"	12"	12"
		38	12"	11"	8"
		47	12"	9"	7"
		54	11"	8"	6"
		61	10"	7"	6"
	1/4" ELCO PANELMATE (FEMALE) WITH 1-1/4" MIN. EMBED	18	10"	10"	10"
		36	10"	8"	6"
		47	9"	6"	5"
		54	8"	6"	4"
		61	7"	5"	4"

ANCHOR SCHEDULE 3

NOTE: ANCHOR SCHEDULE NOTES, SEE SHEET 3.0

James R. Bailey
4/14/20
STATE OF TEXAS
JAMES R. BAILEY
74911
LICENSED
PROFESSIONAL ENGINEER

Hendee Enterprises, Inc.
The Innovative Solutions Company
P.O. Box 4288, Houston, TX 77210-4288 9350 South Point Dr., Houston, TX 77054
(713) 796-2322, Fax (713) 796-2494, (800) 231-7275 (toll), (800) 222-3841 (fax)

EXPORT WARNING: EXPORT OF THIS DOCUMENT TO COUNTRIES OUTSIDE OF THE U.S. SUBJECT TO U.S. EXPORT ADMINISTRATION REGULATIONS.

COPYRIGHT
COPYRIGHT © 2002
HENDEE ENTERPRISES, INC.
ALL RIGHTS RESERVED

CONSULTANTS:
James R. Bailey, P.E.
Texas PE # 74911
Platinum Risk Consulting LLC
4931 Chappel Hill Dr.
Missouri City, Texas 77459
281-403-2825
Texas Firm # 11044

CLIENT: HENDEE ENTERPRISES
LOCATION: HOUSTON, TX
TITLE: FORCE 12 - SERIES 100 - DIAMOND SCREEN
DATE: 10/31/12
REVISION: 0

BY:	REV:	DATE	DESCRIPTION
KLL	0	10/31/12	TEXAS DEPARTMENT OF INSURANCE SUBMITTAL

THIS DOCUMENT, DRAWING, CONCEPTION, AND TRADE SECRET INFORMATION, IS THE PROPERTY OF HENDEE ENTERPRISES, INC. AND IS ONLY TO BE EXECUTED IN CONNECTION WITH HENDEE ENTERPRISES, INC. PRODUCTS. HENDEE ENTERPRISES, INC. ASSUMES NO LIABILITY OR RESPONSIBILITY FOR ANY USE OF THIS DOCUMENT OR PARTS THEREOF CONTRARY TO THE FOREGOING, OR IN ANY OTHER CONNECTION WITH ANY PRODUCT OR PERSON OTHER THAN HENDEE ENTERPRISES, INC. THIS DOCUMENT OR PARTS THEREOF MUST NOT BE REPRODUCED, DISCLOSED OR DISTRIBUTED WITHOUT THE EXPRESS WRITTEN PERMISSION OF HENDEE ENTERPRISES, INC.

CHECKED BY:
DRAWN BY: PAR
FILE NAME: F-12 DIAMOND
JOB NUMBER: DES07
DOCUMENT DATE: 07/26/07

SHEET: 7.0

J:\FORCE 12\2012 TEXAS DEPARTMENT OF INSURANCE\F12-SERIES-100-DIAMOND_SCREEN\F12-SERIES 100-DIAMOND SCREEN.dwg, 4/8/2020 1:55:42 PM, \\HEN-FPAD\DESIGN Kyocera CS 6002i KX