FABRIC-SHIELD PULL DOWN PROTECTION SYSTEM

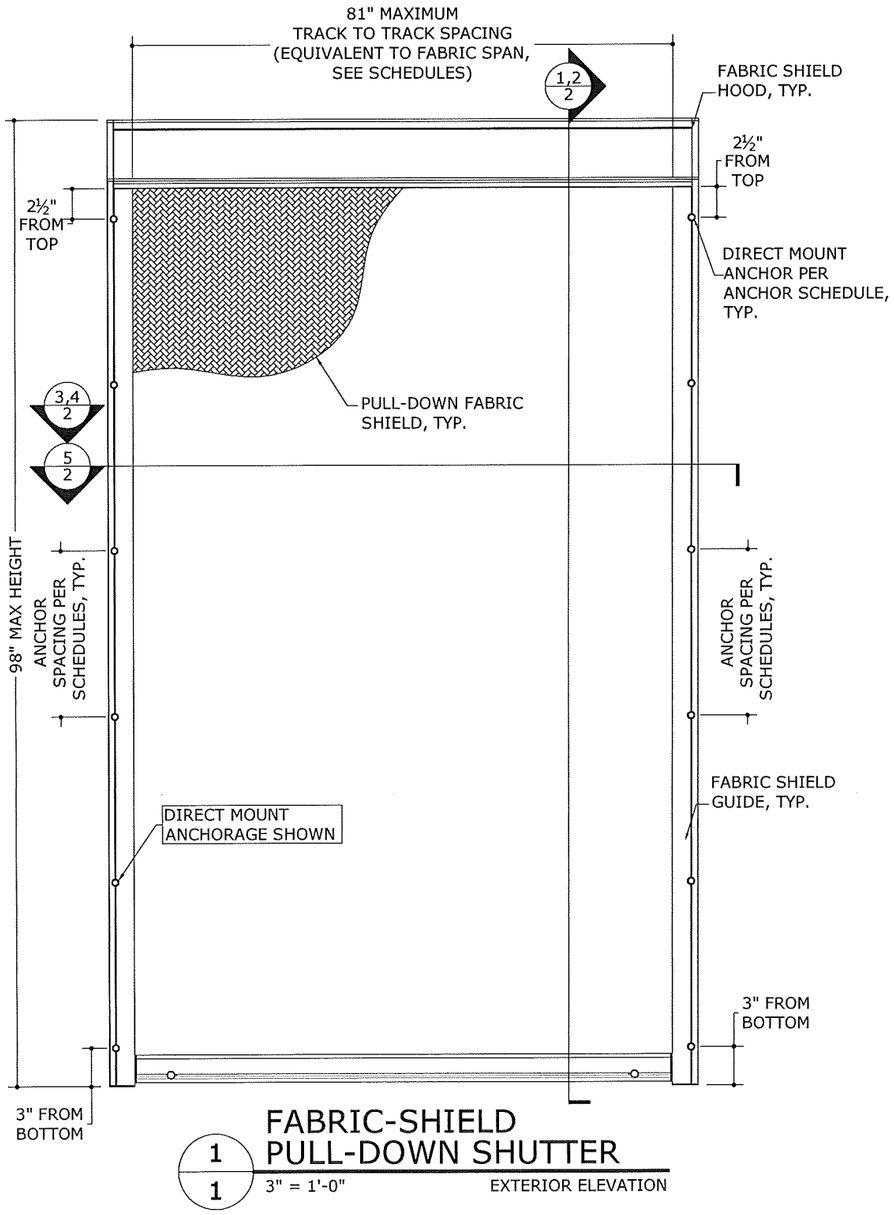

1
1 FABRIC-SHIELD PULL-DOWN SHUTTER
3" = 1'-0" EXTERIOR ELEVATION

MAXIMUM ALLOWABLE DESIGN PRESSURES:

AS NOTED IN SCHEDULES

DESIGN NOTES:

POSITIVE AND NEGATIVE DESIGN PRESSURES CALCULATED FOR USE WITH THIS SYSTEM SHALL BE DETERMINED BY OTHERS ON A JOB-SPECIFIC BASIS IN ACCORDANCE WITH THE GOVERNING CODE. SITE-SPECIFIC WIND LOAD REQUIREMENTS SHALL BE DETERMINED IN ACCORDANCE WITH ASCE 7 AND THE 2009 INTERNATIONAL BUILDING CODE BY SEPARATE ENGINEERING CERTIFICATION AND SHALL BE LESS THAN OR EQUAL TO THE POSITIVE OR NEGATIVE DESIGN PRESSURE CAPACITY VALUE LISTED HEREIN FOR ANY ASSEMBLY WITHIN THE LIMITATIONS STATED HEREIN.

GENERAL NOTES:

1. THE SYSTEM DESCRIBED HEREIN HAS BEEN DESIGNED AND TESTED IN ACCORDANCE WITH THE 2009 INTERNATIONAL BUILDING CODE, FOR USE WITHIN TEXAS INLAND ZONE II, INLAND ZONE I AND SEAWARD ZONE PER TAS 201/202/203 AND ASTM E330/1996/1886 TEST STANDARDS PER TEST REPORTS HETI-07-2134A/B, HETI-02-2137, HETI-07-2136A/B, HETI-07-2135, HETI-07-T641, HETI-06-4101, HETI-06-4102, HETI-06-4103, HETI-06-4104, HETI-06-4105, HETI-06-4106 & HETI-06-T652 BY HURRICANE ENGINEERING & TESTING, INC.
2. THIS PRODUCT IS NOT INTENDED FOR USE WITHIN ASTM WIND ZONE 4 OR ESSENTIAL FACILITIES. SEPARATION FROM GLAZING IS NOT REQUIRED FOR USE WITH THIS PRODUCT.
3. NO 33-1/3% INCREASE IN ALLOWABLE STRESS HAS BEEN USED IN THE DESIGN OF THIS SYSTEM. WIND LOAD DURATION FACTOR Cd=1.6 HAS BEEN USED FOR WOOD ANCHOR DESIGN.
4. DESIGN PRESSURES NOTED HEREIN ARE BASED ON MAXIMUM TESTED PRESSURES DIVIDED BY A 1.5 SAFETY FACTOR.
5. THE SYSTEM DETAILED HEREIN IS GENERIC AND DOES NOT PROVIDE INFORMATION FOR A SPECIFIC SITE. FOR SITE CONDITIONS DIFFERENT FROM THE CONDITIONS DETAILED HEREIN, A LICENSED ENGINEER OR REGISTERED ARCHITECT SHALL PREPARE SITE SPECIFIC DOCUMENTS FOR USE IN CONJUNCTION WITH THIS DOCUMENT.
6. PERMIT HOLDER SHALL VERIFY THE ADEQUACY OF THE EXISTING STRUCTURE TO WITHSTAND SUPERIMPOSED LOADS. WOOD BUCKS (BY OTHERS) SHALL BE ANCHORED PROPERLY TO TRANSFER LOADS TO THE EXISTING STRUCTURE.
7. THIS SYSTEM IS INTENDED FOR USE ONLY DURING WIND STORM EVENTS. WHEN NOT IN USE, PRODUCT SHALL BE PROPERLY STORED AWAY FROM PROLONGED EXPOSURE TO DIRECT SUNLIGHT OR OTHER WEATHERING CONDITIONS.
8. UNLESS OTHERWISE NOTED HEREIN, ALL SCREWS SHALL BE SAE GR. 5 CARBON STEEL.
9. MAXIMUM FABRIC PANEL SPAN: 6'-8" (EQUIVALENT TO THE TRACK TO TRACK SPACING).
10. MAXIMUM ALLOWABLE DESIGN PRESSURE: ±66 PSF.
11. ALL ALUMINUM SHALL BE 6063-T5 UNLESS OTHERWISE NOTED.
12. THE CONTRACTOR IS RESPONSIBLE TO INSULATE ALL MEMBERS FROM DISSIMILAR MATERIALS TO PREVENT ELECTROLYSIS, I.E. ALUMINUM PER F.B.C. 2003.8.4.
13. EXCEPT AS EXPRESSLY PROVIDED HEREIN, NO ADDITIONAL CERTIFICATIONS OR AFFIRMATIONS ARE INTENDED.
14. FABRIC SPECIFICATIONS SHALL BE AS FOLLOWS:
    14.1. TYPE OF YARN: 1350 DENIER (3300 YDS/LBS)
    14.2. DIAMETER: 0.018-0.019 IN
    14.3. FINISH: (FT-340): 3-6%
    14.4. TENSILE RANGE: 45-55 LBS
15. ENGINEER SEAL AFFIXED HERE TO VALIDATES STRUCTURAL DESIGN AS SHOWN ONLY. USE OF THIS SPECIFICATION BY CONTRACTOR, et. al. INDEMNIFIES & SAVES HARMLESS THIS ENGINEER FOR ALL COST & DAMAGES INCLUDING LEGAL FEES & APPELLATE FEES RESULTING FROM MATERIAL FABRICATION, SYSTEM ERECTION, & CONSTRUCTION PRACTICES BEYOND THAT WHICH IS CALLED FOR BY LOCAL, STATE, & FEDERAL CODES & FROM DEVIATIONS OF THIS PLAN.
16. ALTERATIONS, ADDITIONS OR OTHER MARKINGS TO THIS DOCUMENT ARE NOT PERMITTED AND INVALIDATE THIS CERTIFICATION.
17. PANELS SHALL BE LABELED WITH THE MINIMUM REQUIREMENTS AS GOVERNED BY THE TEXAS DEPARTMENT OF INSURANCE OR ASTM.

FRANK L. BENNARDO, P.E.
PE96064
05/30/2013
CERT OF REG. #F-11383

FRANK L. BENNARDO, P.E.
160 SW 12th AVENUE, #106
DEERFIELD BEACH, FL 33442
PH: (954) 354-0660 FAX: (954) 354-0443
POWERED BY THE INNOVATIONS OF ENGINEERING EXPRESS®
EXPERIENCE MORE AT WWW.ENGEXP.COM

WAYNE-DALTON
A DIVISION OF OVERHEAD DOOR CORP.
3395 ADDISON DRIVE
PENSACOLA, FL 32514

FABRIC-SHIELD STORM PANEL
TEXAS DEPARTMENT OF INSURANCE PRODUCT APPROVAL
www.wayne-dalton.com

REMARKS	DRWN	CHKD	DATE
INIT ISSUE	CSL	TSB	05-29-13

THIS DOCUMENT IS THE PROPERTY OF ENGINEERING EXPRESS AND SHALL NOT BE REPRODUCED IN WHOLE OR IN PART WITHOUT THE WRITTEN CONSENT OF THE CERTIFYING ENGINEER. ALTERATIONS, ADDITIONS OR OTHER MARKINGS TO THIS DOCUMENT ARE NOT PERMITTED AND INVALIDATE OUR CERTIFICATION.
COPYRIGHT ENGINEERING EXPRESS

13-WDF-03
SCALE: - 01
PAGE DESCRIPTION:
WAYNE-DALTON PART #317477
-

05/30/2013 - 10:51am chen F:\01 Project Files\Wayne-Dalton (WDF)\2013\13-WDF-03 Fabric Shield Pull Down Shutter TDI\01- Update TDI SHU-112 Fabric Shield\Draw\13-WDF-03_01b-Fabric-Shield Pull Down Shutter (TDI).dwg

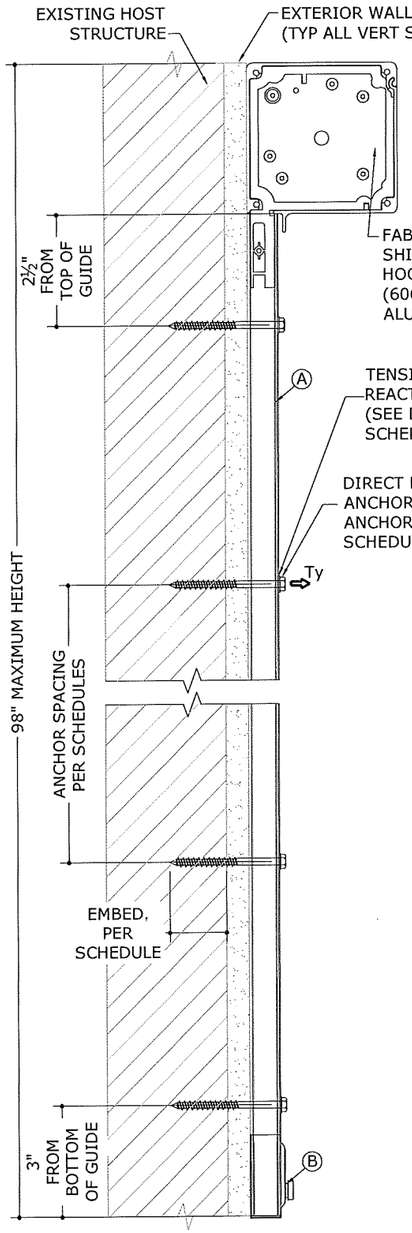

1/2 DIRECT MOUNT SECTION

3" = 1'-0" VERT SECTION

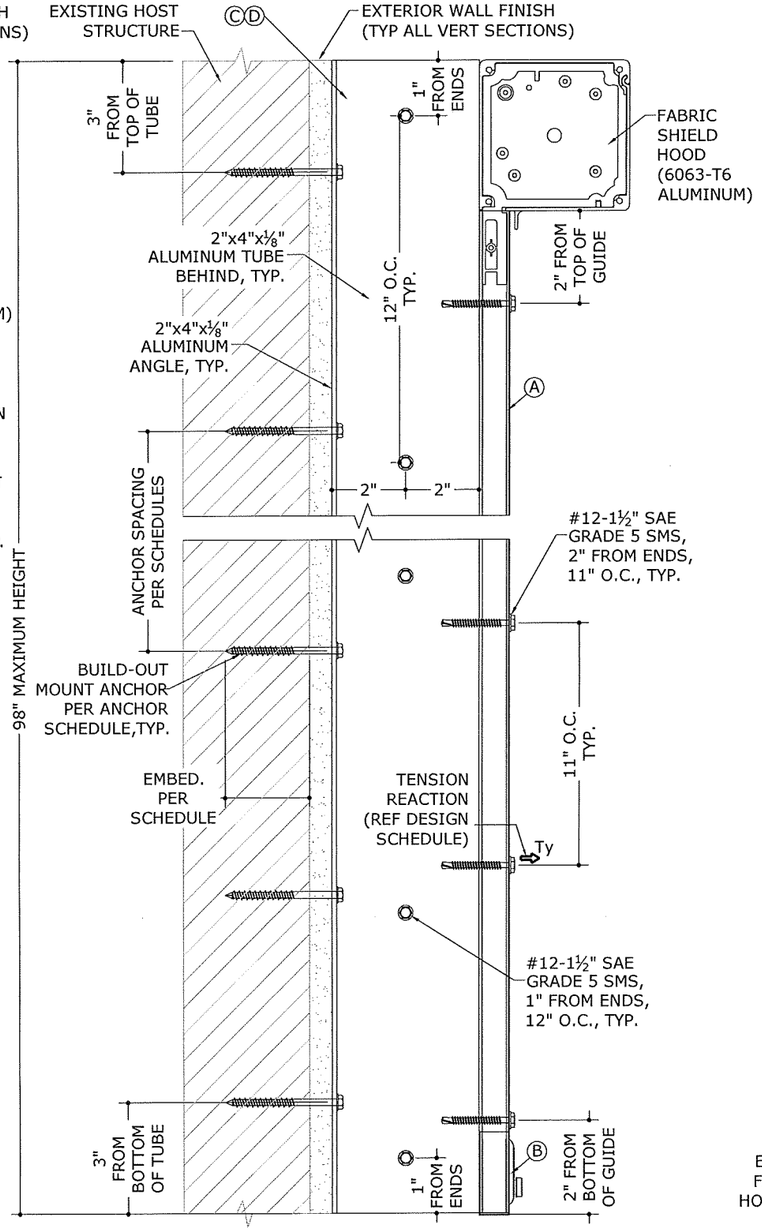

2/2 BUILD-OUT MOUNT SECTION

3" = 1'-0" VERT SECTION

SIDE ANGLE OPTION SHOWN HEREIN. FOR TUBE-MOUNT OPTION, HOST ANCHOR WILL BE PLACED INSIDE TUBE.

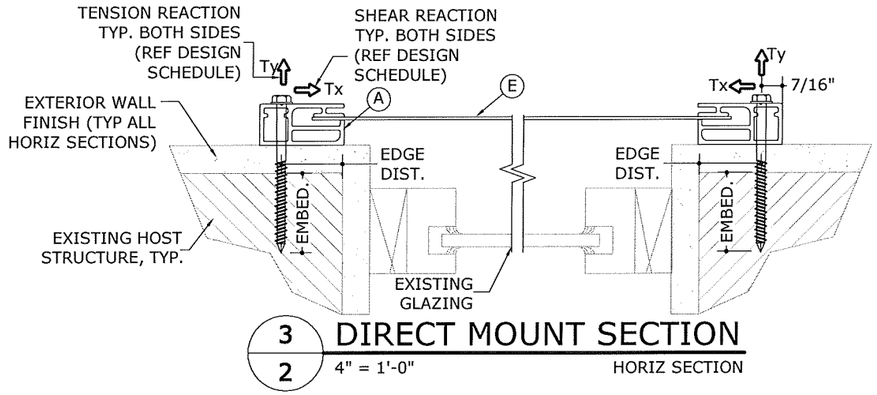

3/2 DIRECT MOUNT SECTION

4" = 1'-0" HORIZ SECTION

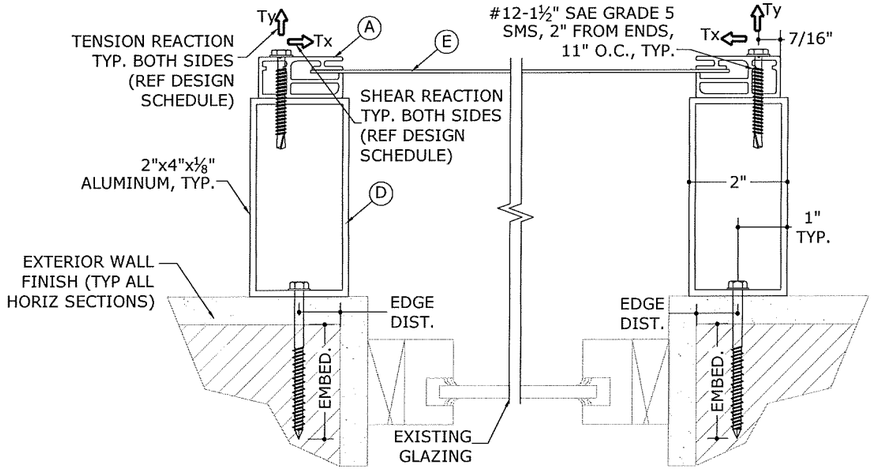

4/2 BUILD-OUT MOUNT

4" = 1'-0" HORIZ SECTION

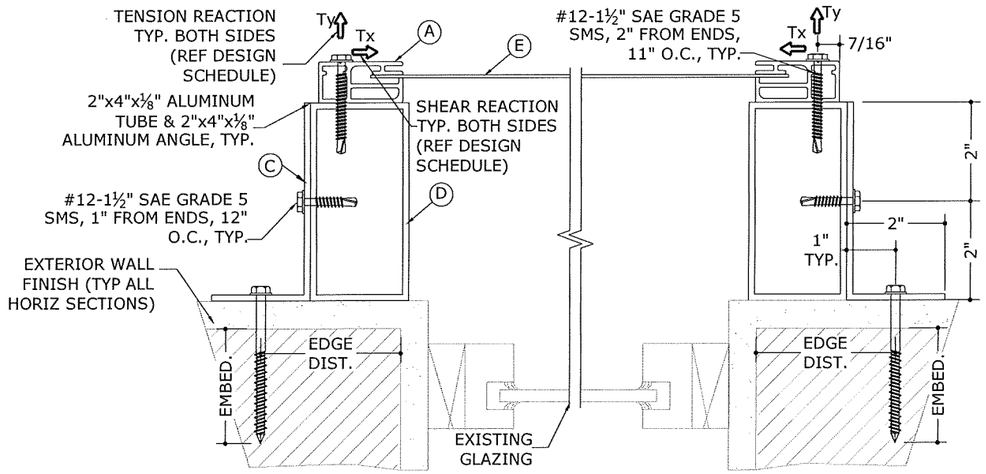

5/2 BUILD-OUT MOUNT WITH SIDE ANGLE

4" = 1'-0" HORIZ SECTION

FRANK L. BENNARDO, P.E.
PE96064
05/30/2013
CERT OF REG. #F-11383

FRANK L. BENNARDO, P.E.
160 SW 12th AVENUE, #106
DEERFIELD BEACH, FL 33442
PH: (954) 354-0660 FAX: (954) 354-0443

POWERED BY THE INNOVATIONS OF ENGINEERING EXPRESS®
EXPERIENCE MORE AT WWW.ENGEXP.COM

WAYNE-DALTON
A DIVISION OF OVERHEAD DOOR CORP.
3395 ADDISON DRIVE
PENSACOLA, FL 32514

FABRIC-SHIELD STORM PANEL
TEXAS DEPARTMENT OF INSURANCE PRODUCT APPROVAL
www.wayne-dalton.com

REMARKS	DRWN	CHKD	DATE
INIT ISSUE	CSL	TSB	05-29-13

THIS DOCUMENT IS THE PROPERTY OF ENGINEERING EXPRESS AND SHALL NOT BE REPRODUCED, CHANGED, OR COPIED IN ANY FORM OR MANNER WHATSOEVER NOR ASSIGNED TO ANY THIRD PARTY WITHOUT FIRST OBTAINING THE EXPRESS WRITTEN PERMISSION AND ADAPTATION OF THE ENGINEER. ALTERATIONS, ADDITIONS, HIGHLIGHTING, OR OTHER MARKINGS TO THIS DOCUMENT ARE NOT PERMITTED AND INVALIDATE OUR CERTIFICATION.

COPYRIGHT ENGINEERING EXPRESS

13-WDF-03

SCALE: - 01

PAGE DESCRIPTION:
WAYNE-DALTON PART #317477
-

2 OF 7

F:\01 Project Files\Wayne-Dalton (WDF)\2013\13-WDF-03 Fabric Shield Pull Down Shutter (TDI)\Draw\13-WDF-03_01b-Fabric-Shield Pull Down Shutter (TDI).dwg
05/30/2013 - 10:51am chen

ANCHOR NOTES:

1) ALL TAPCONS UTILIZED HEREIN SHALL BE BY ITW AND SHALL BE INSTALLED PER MANUFACTURER'S SPECIFICATIONS.
2) ENSURE MINIMUM EDGE DISTANCE FOR ALL ANCHORS PER RESPECTIVE ANCHOR SCHEDULE.
3) MINIMUM EMBEDMENT & EDGE DISTANCE SHALL BE AS NOTED IN ANCHOR SCHEDULE. MINIMUM EMBEDMENT AND EDGE DISTANCE EXCLUDES STUCCO, FOAM, BRICK, AND OTHER WALL FINISHES. EXISTING FINISHES SHALL NOT EXCEED ½" IN THICKNESS OR LOADS SHALL BE TRANSFERRED TO THE HOST STRUCTURE AS CERTIFIED BY OTHERS.
4) ANCHORS SHALL BE INSTALLED IN ACCORDANCE WITH MANUFACTURERS' RECOMMENDATIONS.
5) ALL CONCRETE ANCHORS SPECIFIED HEREIN SHALL BE INSTALLED TO NON-CRACKED CONCRETE ONLY, AS DEFINED IN ACI 355.2.
6) WHERE EXISTING STRUCTURE IS WOOD FRAMING, EXISTING CONDITIONS MAY VARY. FIELD VERIFY THAT ANCHORS ARE INTO ADEQUATE WOOD FRAMING MEMBERS, NOT INTO PLYWOOD.
7) ALL FASTENERS TO BE SAE GRADE 5 UNLESS NOTED OTHERWISE. FASTENERS SHALL BE CADMIUM-PLATED OR OTHERWISE CORROSION-RESISTANT MATERIAL AND SHALL COMPLY WITH "SPECIFICATIONS FOR ALUMINUM STRUCTURES" SECTION 5.2.1 BY THE ALUMINUM ASSOCIATION, INC., & ANY APPLICABLE FEDERAL, STATE, AND/OR LOCAL CODES.
8) FOR ALUMINUM MEMBERS ALL ANCHORS SHALL BE SPACED WITH 2xDIAMETER END DISTANCE AND 2.5xDIAMETER MIN. SPACING TO ADJACENT ANCHORS, UNLESS NOTED OTHERWISE. PROVIDE (5) PINCHES MINIMUM PAST THREAD PLANE FOR ALL SHEET METAL SCREWS.
9) ANCHORS FASTENED TO NARROW FACE OF STUD FRAMING SHALL BE LOCATED IN CENTER OF NOMINAL 2x4 (MIN) WOOD STUD (i.e. 3/4" EDGE DISTANCE IS ACCEPTABLE FOR ¼" ANCHORS ONLY TO WOOD FRAMING). WOOD STRUCTURE SHALL BE "SOUTHERN PINE" G=0.55.
10) ANCHOR SCHEDULE APPLIES FOR ALL PRODUCTS CERTIFIED HEREIN, BUT ONLY PROVIDES MAXIMUM ALLOWABLE ANCHOR SPACING. MAXIMUM ALLOWABLE SPANS AND PRESSURES INDICATED IN SPAN SCHEDULE SHALL APPLY.
11) ▨ INDICATES VALUES NOT APPROVED FOR USE.

EMBEDMENT & EDGE DISTANCE SCHEDULE:

ANCHOR	SUBSTRATE	EMBEDMENT	EDGE DISTANCE
¼" SIMPSON TITEN ANCHOR	3000 PSI CONCRETE	1½"	2½"
	HOLLOW BLOCK	1¼"	1½"
¼" ITW TAPCON	3192 PSI CONCRETE	1¾"	2½"
	HOLLOW BLOCK	1¼"	2½"
#14 WOOD SCREW & ¼" LAG SCREW	WOOD G=0.55	1¾"	¾"
5/16" ELCO ULTRACON	3515 PSI CONCRETE	2"	3⅛"
	GROUT FILLED BLOCK	2¼"	2½"
	WOOD G=0.55	2¾"	1¼"
5/16" ITW TAPCON	2899 PSI CONCRETE	2¼"	3⅛"
	GROUT FILLED BLOCK	1¾"	4"
5/16" WOOD SCREW & LAG SCREW	WOOD G=0.55	2¾"	1¼"

DIRECT MOUNT ANCHOR SCHEDULES:

TRACK TO TRACK SPAN	DIRECT MOUNT CONDITION (IN O.C.)													
	1/4" SIMPSON TITEN ANCHOR							1/4" ITW TAPCON						
	3000 PSI MIN CONCRETE							3192 PSI MIN CONCRETE						
	DESIGN PRESURE (+/-PSF)							DESIGN PRESURE (+/-PSF)						
	35	40	45	50	55	60	66	35	40	45	50	55	60	66
36"	11.0 "	11.0 "	11.0 "	10.4 "	9.6 "	8.9 "	8.2 "	11.0 "	11.0 "	11.0 "	11.0 "	10.3 "	9.6 "	8.9 "
40"	11.0 "	11.0 "	10.4 "	9.5 "	8.8 "	8.2 "	7.5 "	11.0 "	11.0 "	11.0 "	10.2 "	9.5 "	8.8 "	8.2 "
44"	11.0 "	10.5 "	9.6 "	8.8 "	8.1 "	7.5 "	7.0 "	11.0 "	11.0 "	10.3 "	9.5 "	8.8 "	8.2 "	7.6 "
48"	10.9 "	9.8 "	8.9 "	8.2 "	7.5 "	7.0 "	6.5 "	11.0 "	10.5 "	9.6 "	8.8 "	8.2 "	7.6 "	7.1 "
52"	10.3 "	9.2 "	8.3 "	7.6 "	7.1 "	6.6 "	6.1 "	11.0 "	9.9 "	9.0 "	8.3 "	7.7 "	7.2 "	6.6 "
56"	9.7 "	8.7 "	7.8 "	7.2 "	6.6 "	6.2 "	5.7 "	10.4 "	9.3 "	8.5 "	7.8 "	7.2 "	6.7 "	6.2 "
60"	9.1 "	8.2 "	7.4 "	6.8 "	6.3 "	5.8 "	5.4 "	9.8 "	8.8 "	8.0 "	7.4 "	6.8 "	6.4 "	5.9 "
64"	8.7 "	7.7 "	7.0 "	6.4 "	5.9 "	5.5 "	5.1 "	9.3 "	8.4 "	7.6 "	7.0 "	6.5 "	6.1 "	5.6 "
68"	8.2 "	7.4 "	6.7 "	6.1 "	5.6 "	5.2 "	4.8 "	8.9 "	8.0 "	7.3 "	6.7 "	6.2 "	5.8 "	5.3 "
72"	7.8 "	7.0 "	6.4 "	5.8 "	5.4 "	5.0 "	4.6 "	8.5 "	7.6 "	6.9 "	6.4 "	5.9 "	5.5 "	5.1 "
76"	7.5 "	6.7 "	6.1 "	5.6 "	5.1 "	4.8 "	4.4 "	8.1 "	7.3 "	6.7 "	6.1 "	5.7 "	5.3 "	4.9 "
81"	7.1 "	6.4 "	5.7 "	5.3 "	4.8 "	4.5 "	4.1 "	7.7 "	6.9 "	6.3 "	5.8 "	5.4 "	5.0 "	4.6 "

TRACK TO TRACK SPAN	DIRECT MOUNT CONDITION (IN O.C.)													
	1/4" SIMPSON TITEN ANCHOR							1/4" ITW TAPCON						
	HOLLOW OR GROUT FILLED BLOCK (ASTM C90 MIN)							HOLLOW OR GROUT FILLED BLOCK (ASTM C90 MIN)						
	DESIGN PRESURE (+/-PSF)							DESIGN PRESURE (+/-PSF)						
	35	40	45	50	55	60	66	35	40	45	50	55	60	66
36"	6.4 "	5.7 "	5.1 "	4.6 "	4.3 "	3.9 "	3.6 "	5.4 "	4.8 "	4.3 "	3.9 "	3.6 "	3.3 "	3.1 "
40"	5.8 "	5.1 "	4.6 "	4.2 "	3.9 "	3.6 "	3.3 "	4.9 "	4.4 "	3.9 "	3.6 "	3.3 "	3.0 "	▨
44"	5.3 "	4.7 "	4.3 "	3.9 "	3.5 "	3.3 "	3.0 "	4.5 "	4.0 "	3.6 "	3.3 "	3.0 "	▨	▨
48"	4.9 "	4.4 "	3.9 "	3.6 "	3.3 "	3.0 "	▨	4.2 "	3.7 "	3.3 "	3.0 "	▨	▨	▨
52"	4.6 "	4.1 "	3.7 "	3.3 "	3.0 "	▨	▨	3.9 "	3.5 "	3.1 "	▨	▨	▨	▨
56"	4.3 "	3.8 "	3.4 "	3.1 "	▨	▨	▨	3.7 "	3.2 "	▨	▨	▨	▨	▨
60"	4.0 "	3.6 "	3.2 "	▨	▨	▨	▨	3.4 "	3.0 "	▨	▨	▨	▨	▨
64"	3.8 "	3.4 "	3.0 "	▨	▨	▨	▨	3.2 "	▨	▨	▨	▨	▨	▨
68"	3.6 "	3.2 "	▨	▨	▨	▨	▨	3.1 "	▨	▨	▨	▨	▨	▨
72"	3.4 "	3.0 "	▨	▨	▨	▨	▨	▨	▨	▨	▨	▨	▨	▨
76"	3.3 "	▨	▨	▨	▨	▨	▨	▨	▨	▨	▨	▨	▨	▨
81"	3.1 "	▨	▨	▨	▨	▨	▨	▨	▨	▨	▨	▨	▨	▨

TRACK TO TRACK SPAN	DIRECT MOUNT CONDITION (IN O.C.)													
	#14 WOOD SCREW ANCHOR SCHEDULE							1/4" ITW TAPCON						
	WOOD MEMBER (G=0.55 MIN)							WOOD MEMBER (G=0.55 MIN)						
	DESIGN PRESURE (+/-PSF)							DESIGN PRESURE (+/-PSF)						
	35	40	45	50	55	60	66	35	40	45	50	55	60	66
36"	9.3 "	8.4 "	7.6 "	7.0 "	6.5 "	6.1 "	5.7 "	7.0 "	6.4 "	5.8 "	5.4 "	5.0 "	4.7 "	4.4 "
40"	8.5 "	7.7 "	7.0 "	6.5 "	6.0 "	5.6 "	5.2 "	6.5 "	5.9 "	5.4 "	5.0 "	4.6 "	4.4 "	4.1 "
44"	7.9 "	7.2 "	6.5 "	6.0 "	5.6 "	5.2 "	4.9 "	6.0 "	5.5 "	5.0 "	4.6 "	4.3 "	4.1 "	3.8 "
48"	7.4 "	6.7 "	6.1 "	5.6 "	5.2 "	4.9 "	4.5 "	5.7 "	5.1 "	4.7 "	4.4 "	4.1 "	3.8 "	3.5 "
52"	7.0 "	6.3 "	5.8 "	5.3 "	4.9 "	4.6 "	4.3 "	5.3 "	4.8 "	4.4 "	4.1 "	3.8 "	3.6 "	3.3 "
56"	6.6 "	5.9 "	5.4 "	5.0 "	4.6 "	4.3 "	4.0 "	5.1 "	4.6 "	4.2 "	3.9 "	3.6 "	3.4 "	3.2 "
60"	6.3 "	5.6 "	5.1 "	4.7 "	4.4 "	4.1 "	3.8 "	4.8 "	4.4 "	4.0 "	3.7 "	3.4 "	3.2 "	3.0 "
64"	5.9 "	5.4 "	4.9 "	4.5 "	4.2 "	3.9 "	3.6 "	4.6 "	4.2 "	3.8 "	3.5 "	3.3 "	3.1 "	2.9 "
68"	5.7 "	5.1 "	4.7 "	4.3 "	4.0 "	3.7 "	3.4 "	4.4 "	4.0 "	3.6 "	3.4 "	3.1 "	2.9 "	2.7 "
72"	5.4 "	4.9 "	4.5 "	4.1 "	3.8 "	3.6 "	3.3 "	4.2 "	3.8 "	3.5 "	3.2 "	3.0 "	2.8 "	2.6 "
76"	5.2 "	4.7 "	4.3 "	3.9 "	3.6 "	3.4 "	3.2 "	4.0 "	3.7 "	3.3 "	3.1 "	2.9 "	2.7 "	2.5 "
81"	4.9 "	4.5 "	4.1 "	3.7 "	3.5 "	3.2 "	3.0 "	3.8 "	3.5 "	3.2 "	2.9 "	2.7 "	2.6 "	2.4 "

FRANK L. BENNARDO, P.E.
PE96064
05/30/2013
CERT OF REG. #F-11383

FRANK L. BENNARDO, P.E.
160 SW 12th AVENUE, #106
DEERFIELD BEACH, FL 33442
PH: (954) 354-0660 FAX: (954) 354-0443
POWERED BY THE INNOVATIONS OF ENGINEERING EXPRESS®
EXPERIENCE MORE AT WWW.ENGEXP.COM

WAYNE-DALTON
A DIVISION OF OVERHEAD DOOR CORP.
3395 ADDISON DRIVE
PENSACOLA, FL 32514
FABRIC-SHIELD STORM PANEL
TEXAS DEPARTMENT OF INSURANCE PRODUCT APPROVAL
www.wayne-dalton.com

REMARKS	DRWN	CHKD	DATE
INIT ISSUE	CSL	TSB	05-29-13

THIS DOCUMENT IS THE PROPERTY OF ENGINEERING EXPRESS AND SHALL NOT BE REPRODUCED, ALTERED OR MODIFIED WITHOUT THE EXPRESS WRITTEN CONSENT OF ENGINEERING EXPRESS. ALTERATIONS, ADDITIONS, HIGHLIGHTING, OR OTHER MARKINGS TO THIS DOCUMENT ARE NOT PERMITTED AND INVALIDATE OUR CERTIFICATION.

COPYRIGHT ENGINEERING EXPRESS

13-WDF-03
SCALE: - 01
PAGE DESCRIPTION:
WAYNE-DALTON PART #317477
-

05/30/2013 - 10:51am chen F:\01 Project Files\Wayne-Dalton (WDF)\2013\13-WDF-03 Fabric Shield Pull Down Shutter TDI\01- Update TDI SHU-112 Fabric Shield\Draw\13-WDF-03_01b-Fabric-Shield Pull Down Shutter (TD).dwg

DIRECT MOUNT ANCHOR SCHEDULES:

TRACK TO TRACK SPAN	DIRECT MOUNT CONDITION (IN O.C.)													
	5/16" ELCO ULTRACON							5/16" ITW TAPCON						
	3515 PSI MIN CONCRETE							2899 PSI MIN CONCRETE						
	DESIGN PRESURE (+/-PSF)							DESIGN PRESURE (+/-PSF)						
	35	40	45	50	55	60	66	35	40	45	50	55	60	66
36"	11.0"	11.0"	11.0"	11.0"	11.0"	11.0"	11.0"	11.0"	11.0"	11.0"	11.0"	11.0"	11.0"	11.0"
40"	11.0"	11.0"	11.0"	11.0"	11.0"	11.0"	11.0"	11.0"	11.0"	11.0"	11.0"	11.0"	11.0"	11.0"
44"	11.0"	11.0"	11.0"	11.0"	11.0"	11.0"	11.0"	11.0"	11.0"	11.0"	11.0"	11.0"	11.0"	11.0"
48"	11.0"	11.0"	11.0"	11.0"	11.0"	11.0"	11.0"	11.0"	11.0"	11.0"	11.0"	11.0"	11.0"	11.0"
52"	11.0"	11.0"	11.0"	11.0"	11.0"	11.0"	11.0"	11.0"	11.0"	11.0"	11.0"	11.0"	11.0"	11.0"
56"	11.0"	11.0"	11.0"	11.0"	11.0"	11.0"	11.0"	11.0"	11.0"	11.0"	11.0"	11.0"	11.0"	11.0"
60"	11.0"	11.0"	11.0"	11.0"	11.0"	11.0"	10.8"	11.0"	11.0"	11.0"	11.0"	11.0"	11.0"	10.4"
64"	11.0"	11.0"	11.0"	11.0"	11.0"	11.0"	10.2"	11.0"	11.0"	11.0"	11.0"	11.0"	10.7"	9.9"
68"	11.0"	11.0"	11.0"	11.0"	11.0"	10.5"	9.7"	11.0"	11.0"	11.0"	11.0"	11.0"	10.2"	9.3"
72"	11.0"	11.0"	11.0"	11.0"	10.8"	10.0"	9.2"	11.0"	11.0"	11.0"	11.0"	10.4"	9.7"	8.9"
76"	11.0"	11.0"	11.0"	11.0"	10.3"	9.5"	8.8"	11.0"	11.0"	11.0"	10.8"	9.9"	9.2"	8.5"
81"	11.0"	11.0"	11.0"	10.6"	9.7"	9.0"	8.3"	11.0"	11.0"	11.0"	10.2"	9.4"	8.7"	8.0"

TRACK TO TRACK SPAN	DIRECT MOUNT CONDITION (IN O.C.)													
	5/16" ELCO ULTRACON							5/16" ITW TAPCON						
	GROUT FILLED BLOCK (ASTM C90 MIN)							GROUT FILLED BLOCK (ASTM C90 MIN)						
	DESIGN PRESURE (+/-PSF)							DESIGN PRESURE (+/-PSF)						
	35	40	45	50	55	60	66	35	40	45	50	55	60	66
36"	11.0"	9.9"	8.9"	8.2"	7.5"	7.0"	6.4"	11.0"	11.0"	11.0"	11.0"	11.0"	11.0"	11.0"
40"	10.1"	9.0"	8.2"	7.5"	6.9"	6.4"	5.9"	11.0"	11.0"	11.0"	11.0"	11.0"	11.0"	11.0"
44"	9.3"	8.3"	7.5"	6.9"	6.3"	5.9"	5.4"	11.0"	11.0"	11.0"	11.0"	11.0"	11.0"	11.0"
48"	8.7"	7.7"	7.0"	6.4"	5.9"	5.4"		11.0"	11.0"	11.0"	11.0"	11.0"	11.0"	10.7"
52"	8.1"	7.2"	6.5"	5.9"	5.5"	5.0"		11.0"	11.0"	11.0"	11.0"	11.0"	10.9"	10.0"
56"	7.6"	6.8"	6.1"	5.6"	5.1"			11.0"	11.0"	11.0"	11.0"	11.0"	10.2"	9.4"
60"	7.1"	6.4"	5.7"	5.2"				11.0"	11.0"	11.0"	11.0"	10.4"	9.6"	8.9"
64"	6.8"	6.0"	5.4"					11.0"	11.0"	11.0"	10.6"	9.8"	9.1"	8.4"
68"	6.4"	5.7"	5.1"					11.0"	11.0"	11.0"	10.1"	9.3"	8.7"	8.0"
72"	6.1"	5.4"						11.0"	11.0"	10.5"	9.6"	8.9"	8.3"	7.6"
76"	5.8"	5.2"						11.0"	11.0"	10.1"	9.2"	8.5"	7.9"	7.3"
81"	5.5"							11.0"	10.5"	9.5"	8.7"	8.1"	7.5"	6.9"

TRACK TO TRACK SPAN	DIRECT MOUNT CONDITION (IN O.C.)													
	5/16" ELCO ULTRACON							5/16" WOOD SCREW						
	WOOD MEMBER (G=0.55 MIN)							WOOD MEMBER (G=0.55 MIN)						
	DESIGN PRESURE (+/-PSF)							DESIGN PRESURE (+/-PSF)						
	35	40	45	50	55	60	66	35	40	45	50	55	60	66
36"	11.0"	10.2"	9.4"	8.7"	8.1"	7.6"	7.1"	11.0"	10.6"	9.8"	9.0"	8.4"	7.9"	7.4"
40"	10.4"	9.5"	8.7"	8.0"	7.5"	7.0"	6.5"	10.9"	9.9"	9.0"	8.4"	7.8"	7.3"	6.8"
44"	9.7"	8.8"	8.1"	7.5"	7.0"	6.5"	6.1"	10.1"	9.2"	8.4"	7.8"	7.3"	6.8"	6.4"
48"	9.1"	8.3"	7.6"	7.0"	6.5"	6.1"	5.7"	9.5"	8.6"	7.9"	7.3"	6.8"	6.4"	6.0"
52"	8.6"	7.8"	7.1"	6.6"	6.2"	5.8"	5.4"	9.0"	8.1"	7.5"	6.9"	6.4"	6.0"	5.6"
56"	8.2"	7.4"	6.8"	6.3"	5.8"	5.5"	5.1"	8.5"	7.7"	7.1"	6.5"	6.1"	5.7"	5.3"
60"	7.7"	7.0"	6.4"	5.9"	5.5"	5.2"	4.8"	8.1"	7.3"	6.7"	6.2"	5.8"	5.4"	5.1"
64"	7.4"	6.7"	6.1"	5.7"	5.3"	4.9"	4.6"	7.7"	7.0"	6.4"	5.9"	5.5"	5.2"	4.8"
68"	7.1"	6.4"	5.9"	5.4"	5.0"	4.7"	4.4"	7.4"	6.7"	6.1"	5.7"	5.3"	5.0"	4.6"
72"	6.8"	6.1"	5.6"	5.2"	4.8"	4.5"	4.2"	7.1"	6.4"	5.9"	5.4"	5.1"	4.7"	4.4"
76"	6.5"	5.9"	5.4"	5.0"	4.6"	4.3"	4.0"	6.8"	6.2"	5.6"	5.2"	4.9"	4.6"	4.2"
81"	6.2"	5.6"	5.1"	4.7"	4.4"	4.1"	3.8"	6.5"	5.9"	5.4"	5.0"	4.6"	4.3"	4.0"

BUILD-OUT MOUNT w/ SIDE ANGLE ANCHOR SCHEDULES:

TRACK TO TRACK SPAN	BUILD-OUT ANGLE CONDITION (IN O.C.)													
	1/4" SIMPSON TITEN ANCHOR							1/4" ITW TAPCON						
	3000 PSI MIN CONCRETE							3192 PSI MIN CONCRETE						
	DESIGN PRESURE (+/-PSF)							DESIGN PRESURE (+/-PSF)						
	35	40	45	50	55	60	66	35	40	45	50	55	60	66
36"	9.3"	8.4"	7.8"	7.2"	6.7"	6.3"	5.9"	10.6"	9.7"	8.9"	8.2"	7.7"	7.2"	6.7"
40"	8.6"	7.8"	7.2"	6.7"	6.2"	5.8"	5.4"	9.9"	9.0"	8.2"	7.6"	7.1"	6.7"	6.3"
44"	8.0"	7.3"	6.7"	6.2"	5.8"	5.4"	5.1"	9.2"	8.4"	7.7"	7.1"	6.7"	6.3"	5.8"
48"	7.6"	6.9"	6.3"	5.8"	5.4"	5.1"	4.7"	8.7"	7.9"	7.2"	6.7"	6.3"	5.9"	5.5"
52"	7.1"	6.5"	5.9"	5.5"	5.1"	4.8"	4.5"	8.2"	7.4"	6.8"	6.3"	5.9"	5.5"	5.2"
56"	6.8"	6.1"	5.6"	5.2"	4.8"	4.5"	4.2"	7.8"	7.0"	6.5"	6.0"	5.6"	5.2"	4.9"
60"	6.4"	5.8"	5.3"	4.9"	4.6"	4.3"	4.0"	7.4"	6.7"	6.2"	5.7"	5.3"	5.0"	4.7"
64"	6.1"	5.6"	5.1"	4.7"	4.4"	4.1"	3.8"	7.0"	6.4"	5.9"	5.4"	5.1"	4.8"	4.4"
68"	5.9"	5.3"	4.9"	4.5"	4.2"	3.9"	3.7"	6.7"	6.1"	5.6"	5.2"	4.9"	4.6"	4.2"
72"	5.6"	5.1"	4.7"	4.3"	4.0"	3.8"	3.5"	6.5"	5.9"	5.4"	5.0"	4.7"	4.4"	4.1"
76"	5.4"	4.9"	4.5"	4.2"	3.9"	3.6"	3.4"	6.2"	5.6"	5.2"	4.8"	4.5"	4.2"	3.9"
81"	5.1"	4.7"	4.3"	4.0"	3.7"	3.5"	3.2"	5.9"	5.4"	4.9"	4.6"	4.3"	4.0"	3.7"

TRACK TO TRACK SPAN	BUILD-OUT ANGLE CONDITION (IN O.C.)													
	#14 WOOD SCREW ANCHOR SCHEDULE							1/4" ITW TAPCON						
	WOOD MEMBER (G=0.55 MIN)							WOOD MEMBER (G=0.55 MIN)						
	DESIGN PRESURE (+/-PSF)							DESIGN PRESURE (+/-PSF)						
	35	40	45	50	55	60	66	35	40	45	50	55	60	66
36"	7.1"	6.5"	5.9"	5.5"	5.2"	4.9"	4.5"	5.8"	5.3"	4.9"	4.5"	4.3"	4.0"	3.7"
40"	6.6"	6.0"	5.5"	5.1"	4.8"	4.5"	4.2"	5.4"	4.9"	4.5"	4.2"	4.0"	3.7"	3.5"
44"	6.2"	5.6"	5.2"	4.8"	4.5"	4.2"	3.9"	5.1"	4.6"	4.3"	4.0"	3.7"	3.5"	3.3"
48"	5.8"	5.3"	4.9"	4.5"	4.2"	4.0"	3.7"	4.8"	4.3"	4.0"	3.7"	3.5"	3.3"	3.1"
52"	5.5"	5.0"	4.6"	4.3"	4.0"	3.7"	3.5"	4.5"	4.1"	3.8"	3.5"	3.3"	3.1"	2.9"
56"	5.2"	4.7"	4.4"	4.0"	3.8"	3.5"	3.3"	4.3"	3.9"	3.6"	3.3"	3.1"	2.9"	2.8"
60"	5.0"	4.5"	4.1"	3.8"	3.6"	3.4"	3.2"	4.1"	3.7"	3.4"	3.2"	3.0"	2.8"	2.6"
64"	4.7"	4.3"	4.0"	3.7"	3.4"	3.2"	3.0"	3.9"	3.6"	3.3"	3.0"	2.8"	2.7"	2.5"
68"	4.5"	4.1"	3.8"	3.5"	3.3"	3.1"	2.9"	3.7"	3.4"	3.1"	2.9"	2.7"	2.6"	2.4"
72"	4.4"	4.0"	3.6"	3.4"	3.2"	3.0"	2.8"	3.6"	3.3"	3.0"	2.8"	2.6"	2.5"	2.3"
76"	4.2"	3.8"	3.5"	3.2"	3.0"	2.8"	2.7"	3.5"	3.2"	2.9"	2.7"	2.5"	2.4"	2.2"
81"	4.0"	3.6"	3.3"	3.1"	2.9"	2.7"	2.5"	3.3"	3.0"	2.8"	2.6"	2.4"	2.3"	2.1"

SEE ANCHOR NOTES ON SHEET 3

FRANK L. BENNARDO, P.E.
PE96064
05/30/2013
CERT OF REG. #F-11383
FRANK L. BENNARDO, P.E.
160 SW 12th AVENUE, #106
DEERFIELD BEACH, FL 33442
PH: (954) 354-0660 FAX: (954) 354-0443
POWERED BY THE INNOVATIONS OF
ENGINEERING EXPRESS®
EXPERIENCE MORE AT WWW.ENGEXP.COM

WAYNE-DALTON
A DIVISION OF OVERHEAD DOOR CORP.
3395 ADDISON DRIVE
PENSACOLA, FL 32514

FABRIC-SHIELD STORM PANEL
TEXAS DEPARTMENT OF INSURANCE PRODUCT APPROVAL
www.wayne-dalton.com

REMARKS	DRWN	CHKD	DATE
INIT ISSUE	CSL	TSB	05-29-13
-	-	-	-
-	-	-	-
-	-	-	-
-	-	-	-

THIS DOCUMENT IS THE PROPERTY OF ENGINEERING EXPRESS AND SHALL NOT BE REPRODUCED IN WHOLE OR PART WITHOUT WRITTEN CONSENT OF THE CERTIFYING ENGINEER. ALTERATIONS, ADDITIONS, HIGHLIGHTING, OR OTHER MARKINGS TO THIS DOCUMENT ARE NOT PERMITTED AND INVALIDATE OUR CERTIFICATION.
COPYRIGHT ENGINEERING EXPRESS

13-WDF-03
SCALE: - 01
PAGE DESCRIPTION:
WAYNE-DALTON PART #317477
-

F:\01 Project Files\Wayne-Dalton (WDF)\2013\13-WDF-03 Fabric Shield Pull Down Shutter TDI\01- Update TDI SHU-112 Fabric Shield\Draw13-WDF-03_01b-Fabric-Shield Pull Down Shutter (TDI).dwg chen 05/30/2013 - 10:51am

BUILD-OUT MOUNT w/ SIDE ANGLE ANCHOR SCHEDULES:

TRACK TO TRACK SPAN	BUILD-OUT ANGLE CONDITION (IN O.C.)													
	5/16" ELCO ULTRACON 3515 PSI MIN CONCRETE DESIGN PRESURE (+/-PSF)							5/16" ITW TAPCON 2899 PSI MIN CONCRETE DESIGN PRESURE (+/-PSF)						
	35	40	45	50	55	60	66	35	40	45	50	55	60	66
36"	11.0 "	11.0 "	11.0 "	11.0 "	11.0 "	11.0 "	11.0 "	11.0 "	11.0 "	11.0 "	11.0 "	11.0 "	11.0 "	11.0 "
40"	11.0 "	11.0 "	11.0 "	11.0 "	11.0 "	11.0 "	10.8 "	11.0 "	11.0 "	11.0 "	11.0 "	11.0 "	11.0 "	10.3 "
44"	11.0 "	11.0 "	11.0 "	11.0 "	11.0 "	10.8 "	10.0 "	11.0 "	11.0 "	11.0 "	11.0 "	11.0 "	10.3 "	9.6 "
48"	11.0 "	11.0 "	11.0 "	11.0 "	10.8 "	10.1 "	9.4 "	11.0 "	11.0 "	11.0 "	11.0 "	10.3 "	9.7 "	9.0 "
52"	11.0 "	11.0 "	11.0 "	10.9 "	10.1 "	9.5 "	8.9 "	11.0 "	11.0 "	11.0 "	10.4 "	9.7 "	9.1 "	8.5 "
56"	11.0 "	11.0 "	11.0 "	10.3 "	9.6 "	9.0 "	8.4 "	11.0 "	11.0 "	10.7 "	9.9 "	9.2 "	8.6 "	8.0 "
60"	11.0 "	11.0 "	10.6 "	9.8 "	9.1 "	8.6 "	8.0 "	11.0 "	11.0 "	10.1 "	9.4 "	8.7 "	8.2 "	7.6 "
64"	11.0 "	11.0 "	10.1 "	9.3 "	8.7 "	8.2 "	7.6 "	11.0 "	10.5 "	9.7 "	8.9 "	8.3 "	7.8 "	7.3 "
68"	11.0 "	10.5 "	9.7 "	8.9 "	8.3 "	7.8 "	7.3 "	11.0 "	10.1 "	9.2 "	8.5 "	8.0 "	7.5 "	6.9 "
72"	11.0 "	10.1 "	9.3 "	8.6 "	8.0 "	7.5 "	7.0 "	10.7 "	9.7 "	8.9 "	8.2 "	7.6 "	7.1 "	6.7 "
76"	10.7 "	9.7 "	8.9 "	8.2 "	7.7 "	7.2 "	6.7 "	10.3 "	9.3 "	8.5 "	7.9 "	7.3 "	6.9 "	6.4 "
81"	10.2 "	9.2 "	8.5 "	7.8 "	7.3 "	6.8 "	6.4 "	9.8 "	8.8 "	8.1 "	7.5 "	7.0 "	6.5 "	6.1 "

TRACK TO TRACK SPAN	BUILD-OUT ANGLE CONDITION (IN O.C.)													
	5/16" ELCO ULTRACON GROUT FILLED BLOCK (ASTM C90 MIN) DESIGN PRESURE (+/-PSF)							5/16" ITW TAPCON GROUT FILLED BLOCK (ASTM C90 MIN) DESIGN PRESURE (+/-PSF)						
	35	40	45	50	55	60	66	35	40	45	50	55	60	66
36"	6.8 "	6.2 "	5.7 "	5.2 "				11.0 "	11.0 "	11.0 "	11.0 "	11.0 "	10.6 "	9.9 "
40"	6.3 "	5.7 "	5.2 "					11.0 "	11.0 "	11.0 "	11.0 "	10.5 "	9.8 "	9.2 "
44"	5.9 "	5.3 "						11.0 "	11.0 "	11.0 "	10.5 "	9.8 "	9.2 "	8.5 "
48"	5.5 "							11.0 "	11.0 "	10.6 "	9.8 "	9.2 "	8.6 "	8.0 "
52"	5.2 "							11.0 "	10.9 "	10.0 "	9.3 "	8.6 "	8.1 "	7.6 "
56"								11.0 "	10.3 "	9.5 "	8.8 "	8.2 "	7.7 "	7.2 "
60"								10.8 "	9.8 "	9.0 "	8.3 "	7.8 "	7.3 "	6.8 "
64"								10.3 "	9.4 "	8.6 "	8.0 "	7.4 "	7.0 "	6.5 "
68"								9.9 "	9.0 "	8.2 "	7.6 "	7.1 "	6.7 "	6.2 "
72"								9.5 "	8.6 "	7.9 "	7.3 "	6.8 "	6.4 "	5.9 "
76"								9.1 "	8.3 "	7.6 "	7.0 "	6.5 "	6.1 "	5.7 "
81"								8.7 "	7.9 "	7.2 "	6.7 "	6.2 "	5.8 "	5.4 "

TRACK TO TRACK SPAN	BUILD-OUT ANGLE CONDITION (IN O.C.)													
	5/16" ELCO ULTRACON WOOD MEMBER (G=0.55 MIN) DESIGN PRESURE (+/-PSF)							5/16" WOOD SCREW WOOD MEMBER (G=0.55 MIN) DESIGN PRESURE (+/-PSF)						
	35	40	45	50	55	60	66	35	40	45	50	55	60	66
36"	9.4 "	8.5 "	7.9 "	7.3 "	6.8 "	6.4 "	6.0 "	9.9 "	9.1 "	8.4 "	7.8 "	7.3 "	6.8 "	6.4 "
40"	8.7 "	7.9 "	7.3 "	6.8 "	6.4 "	6.0 "	5.6 "	9.2 "	8.4 "	7.8 "	7.2 "	6.8 "	6.4 "	6.0 "
44"	8.1 "	7.4 "	6.8 "	6.4 "	5.9 "	5.6 "	5.2 "	8.7 "	7.9 "	7.3 "	6.8 "	6.3 "	6.0 "	5.6 "
48"	7.7 "	7.0 "	6.4 "	6.0 "	5.6 "	5.3 "	4.9 "	8.2 "	7.4 "	6.8 "	6.4 "	6.0 "	5.6 "	5.2 "
52"	7.2 "	6.6 "	6.1 "	5.7 "	5.3 "	5.0 "	4.7 "	7.7 "	7.0 "	6.5 "	6.0 "	5.6 "	5.3 "	5.0 "
56"	6.9 "	6.3 "	5.8 "	5.4 "	5.0 "	4.7 "	4.4 "	7.3 "	6.7 "	6.2 "	5.7 "	5.4 "	5.0 "	4.7 "
60"	6.6 "	6.0 "	5.5 "	5.1 "	4.8 "	4.5 "	4.2 "	7.0 "	6.4 "	5.9 "	5.4 "	5.1 "	4.8 "	4.5 "
64"	6.3 "	5.7 "	5.3 "	4.9 "	4.6 "	4.3 "	4.0 "	6.7 "	6.1 "	5.6 "	5.2 "	4.9 "	4.6 "	4.3 "
68"	6.0 "	5.5 "	5.0 "	4.7 "	4.4 "	4.1 "	3.9 "	6.4 "	5.8 "	5.4 "	5.0 "	4.7 "	4.4 "	4.1 "
72"	5.8 "	5.3 "	4.8 "	4.5 "	4.2 "	4.0 "	3.7 "	6.2 "	5.6 "	5.2 "	4.8 "	4.5 "	4.2 "	4.0 "
76"	5.6 "	5.1 "	4.7 "	4.3 "	4.1 "	3.8 "	3.6 "	5.9 "	5.4 "	5.0 "	4.6 "	4.3 "	4.1 "	3.8 "
81"	5.3 "	4.8 "	4.5 "	4.1 "	3.9 "	3.6 "	3.4 "	5.7 "	5.2 "	4.8 "	4.4 "	4.1 "	3.9 "	3.6 "

BUILD-OUT MOUNT ANCHOR SCHEDULES (HOST ANCHOR INSIDE TUBE):

TRACK TO TRACK SPAN	TUBE MOUNT CONDITION (IN O.C.)													
	1/4" SIMPSON TITEN ANCHOR 3000 PSI MIN CONCRETE DESIGN PRESURE (+/-PSF)							1/4" ITW TAPCON 3192 PSI MIN CONCRETE DESIGN PRESURE (+/-PSF)						
	35	40	45	50	55	60	66	35	40	45	50	55	60	66
36"	4.3 "	4.0 "	3.6 "	3.4 "	3.2 "			5.3 "	4.9 "	4.5 "	4.2 "	3.9 "	3.7 "	3.4 "
40"	4.0 "	3.7 "	3.4 "	3.1 "				5.0 "	4.5 "	4.2 "	3.9 "	3.6 "	3.4 "	3.2 "
44"	3.8 "	3.4 "	3.2 "					4.6 "	4.2 "	3.9 "	3.6 "	3.4 "	3.2 "	
48"	3.6 "	3.2 "						4.4 "	4.0 "	3.7 "	3.4 "	3.2 "		
52"	3.4 "	3.1 "						4.1 "	3.8 "	3.5 "	3.2 "	3.0 "		
56"	3.2 "							3.9 "	3.6 "	3.3 "	3.1 "			
60"	3.0 "							3.7 "	3.4 "	3.1 "				
64"								3.6 "	3.3 "					
68"								3.4 "	3.1 "					
72"								3.3 "						
76"								3.2 "						
81"								3.0 "						

TRACK TO TRACK SPAN	TUBE MOUNT CONDITION (IN O.C.)													
	#14 WOOD SCREW ANCHOR SCHEDULE WOOD MEMBER (G=0.55 MIN) DESIGN PRESURE (+/-PSF)							1/4" ITW TAPCON WOOD MEMBER (G=0.55 MIN) DESIGN PRESURE (+/-PSF)						
	35	40	45	50	55	60	66	35	40	45	50	55	60	66
36"	4.2 "	3.8 "	3.5 "	3.3 "	3.1 "	2.9 "	2.7 "	3.9 "	3.5 "	3.3 "	3.0 "	2.8 "	2.7 "	2.5 "
40"	3.9 "	3.6 "	3.3 "	3.0 "	2.9 "	2.7 "	2.5 "	3.6 "	3.3 "	3.0 "	2.8 "	2.6 "	2.5 "	2.3 "
44"	3.7 "	3.3 "	3.1 "	2.9 "	2.7 "	2.5 "	2.4 "	3.4 "	3.1 "	2.8 "	2.6 "	2.5 "	2.3 "	2.2 "
48"	3.4 "	3.1 "	2.9 "	2.7 "	2.5 "	2.4 "	2.2 "	3.2 "	2.9 "	2.7 "	2.5 "	2.3 "	2.2 "	2.1 "
52"	3.3 "	3.0 "	2.7 "	2.5 "	2.4 "	2.2 "	2.1 "	3.0 "	2.7 "	2.5 "	2.4 "	2.2 "	2.1 "	1.9 "
56"	3.1 "	2.8 "	2.6 "	2.4 "	2.3 "	2.1 "	2.0 "	2.9 "	2.6 "	2.4 "	2.2 "	2.1 "	2.0 "	1.9 "
60"	2.9 "	2.7 "	2.5 "	2.3 "	2.2 "	2.0 "	1.9 "	2.7 "	2.5 "	2.3 "	2.1 "	2.0 "	1.9 "	1.8 "
64"	2.8 "	2.6 "	2.4 "	2.2 "	2.1 "	1.9 "	1.8 "	2.6 "	2.4 "	2.2 "	2.0 "	1.9 "	1.8 "	1.7 "
68"	2.7 "	2.5 "	2.3 "	2.1 "	2.0 "	1.9 "	1.7 "	2.5 "	2.3 "	2.1 "	2.0 "	1.8 "	1.7 "	1.6 "
72"	2.6 "	2.4 "	2.2 "	2.0 "	1.9 "	1.8 "	1.7 "	2.4 "	2.2 "	2.0 "	1.9 "	1.8 "	1.7 "	1.6 "
76"	2.5 "	2.3 "	2.1 "	2.0 "	1.8 "	1.7 "	1.6 "	2.3 "	2.1 "	2.0 "	1.8 "	1.7 "	1.6 "	
81"	2.4 "	2.2 "	2.0 "	1.9 "	1.7 "	1.6 "	1.5 "	2.2 "	2.0 "	1.9 "	1.7 "	1.6 "	1.5 "	

SEE ANCHOR NOTES ON SHEET 3

FRANK L. BENNARDO, P.E.
PE96064
05/30/2013
CERT OF REG. #F-11383
FRANK L. BENNARDO, P.E.
160 SW 12th AVENUE, #106
DEERFIELD BEACH, FL 33442
PH: (954) 354-0660 FAX: (954) 354-0443
POWERED BY THE INNOVATIONS OF
ENGINEERING EXPRESS®
EXPERIENCE MORE AT WWW.ENGEXP.COM

WAYNE-DALTON
A DIVISION OF OVERHEAD DOOR CORP.
3395 ADDISON DRIVE
PENSACOLA, FL 32514

FABRIC-SHIELD STORM PANEL
TEXAS DEPARTMENT OF INSURANCE PRODUCT APPROVAL
www.wayne-dalton.com

REMARKS	DRWN	CHKD	DATE
INIT ISSUE	CSL	TSB	05-29-13

THIS DOCUMENT IS THE PROPERTY OF ENGINEERING EXPRESS AND SHALL NOT BE REPRODUCED IN WHOLE OR IN PART WITHOUT THE WRITTEN CONSENT OF THE UNDERSIGNED ENGINEER. ALTERATIONS, ANY USE OF THIS DOCUMENT FOR OTHER THAN THE SPECIFIC PROJECT FOR WHICH IT WAS PREPARED, OR ANY REPRODUCTION OF THIS DOCUMENT ARE NOT PERMITTED AND INVALIDATE OUR CERTIFICATION.

COPYRIGHT ENGINEERING EXPRESS

13-WDF-03
SCALE: - 01
PAGE DESCRIPTION:
WAYNE-DALTON PART #317477
-

05/30/2013 - 10:51am chen F:\01 Project Files\Wayne-Dalton (WDF)\2013\13-WDF-03_01b-Fabric-Shield Pull Down Shutter (TDI).dwg
Wayne Dalton Shutter TDI01- Update TDI SHU-112 Fabric Shield\Draw13-WDF-03_01b-Fabric-Shield Pull Down Shutter (TDI).dwg

BUILD-OUT MOUNT ANCHOR SCHEDULES (HOST ANCHOR INSIDE TUBE):

TRACK TO TRACK SPAN	TUBE MOUNT CONDITION (IN O.C.)													
	5/16" ELCO ULTRACON 3515 PSI MIN CONCRETE DESIGN PRESURE (+/-PSF)							5/16" ITW TAPCON 2899 PSI MIN CONCRETE DESIGN PRESURE (+/-PSF)						
	35	40	45	50	55	60	66	35	40	45	50	55	60	66
36"	8.4 "	7.7 "	7.1 "	6.6 "	6.2 "	5.8 "	5.4 "	8.0 "	7.3 "	6.7 "	6.2 "	5.8 "	5.5 "	5.1 "
40"	7.9 "	7.2 "	6.6 "	6.1 "	5.7 "	5.4 "	5.0 "	7.4 "	6.8 "	6.2 "	5.8 "	5.4 "	5.1 "	4.8 "
44"	7.3 "	6.7 "	6.2 "	5.7 "	5.4 "	5.0 "		7.0 "	6.3 "	5.8 "	5.4 "	5.1 "	4.8 "	4.5 "
48"	6.9 "	6.3 "	5.8 "	5.4 "	5.0 "			6.6 "	6.0 "	5.5 "	5.1 "	4.8 "	4.5 "	4.2 "
52"	6.5 "	6.0 "	5.5 "	5.1 "				6.2 "	5.6 "	5.2 "	4.8 "	4.5 "	4.2 "	4.0 "
56"	6.2 "	5.7 "	5.2 "					5.9 "	5.4 "	4.9 "	4.6 "	4.3 "	4.0 "	3.8 "
60"	5.9 "	5.4 "						5.6 "	5.1 "	4.7 "	4.4 "	4.1 "	3.8 "	
64"	5.7 "	5.1 "						5.4 "	4.9 "	4.5 "	4.2 "	3.9 "		
68"	5.4 "							5.1 "	4.7 "	4.3 "	4.0 "			
72"	5.2 "							4.9 "	4.5 "	4.1 "	3.8 "			
76"	5.0 "							4.8 "	4.3 "	4.0 "				
81"								4.5 "	4.1 "	3.8 "				

TRACK TO TRACK SPAN	TUBE MOUNT CONDITION (IN O.C.)						
	5/16" ITW TAPCON GROUT FILLED BLOCK (ASTM C90 MIN) DESIGN PRESURE (+/-PSF)						
	35	40	45	50	55	60	66
36"	7.5 "	6.8 "	6.3 "	5.8 "	5.5 "	5.1 "	4.8 "
40"	7.0 "	6.3 "	5.8 "	5.4 "	5.1 "	4.8 "	4.5 "
44"	6.5 "	5.9 "	5.5 "	5.1 "	4.8 "	4.5 "	4.2 "
48"	6.1 "	5.6 "	5.1 "	4.8 "	4.5 "	4.2 "	3.9 "
52"	5.8 "	5.3 "	4.9 "	4.5 "	4.2 "	4.0 "	3.7 "
56"	5.5 "	5.0 "	4.6 "	4.3 "	4.0 "	3.8 "	3.5 "
60"	5.2 "	4.8 "	4.4 "	4.1 "	3.8 "	3.6 "	3.4 "
64"	5.0 "	4.6 "	4.2 "	3.9 "	3.7 "	3.4 "	3.2 "
68"	4.8 "	4.4 "	4.0 "	3.7 "	3.5 "	3.3 "	3.1 "
72"	4.6 "	4.2 "	3.9 "	3.6 "	3.4 "	3.2 "	3.0 "
76"	4.4 "	4.0 "	3.7 "	3.5 "	3.2 "	3.0 "	2.8 "
81"	4.2 "	3.9 "	3.6 "	3.3 "	3.1 "	2.9 "	2.7 "

TRACK TO TRACK SPAN	TUBE MOUNT CONDITION (IN O.C.)													
	5/16" ELCO ULTRACON WOOD MEMBER (G=0.55 MIN) DESIGN PRESURE (+/-PSF)							5/16" WOOD SCREW WOOD MEMBER (G=0.55 MIN) DESIGN PRESURE (+/-PSF)						
	35	40	45	50	55	60	66	35	40	45	50	55	60	66
36"	6.2 "	5.7 "	5.2 "	4.9 "	4.6 "	4.3 "	4.0 "	6.9 "	6.3 "	5.8 "	5.4 "	5.0 "	4.7 "	4.4 "
40"	5.8 "	5.3 "	4.9 "	4.5 "	4.2 "	4.0 "	3.7 "	6.4 "	5.8 "	5.4 "	5.0 "	4.7 "	4.4 "	4.1 "
44"	5.4 "	4.9 "	4.6 "	4.2 "	4.0 "	3.7 "	3.5 "	6.0 "	5.5 "	5.0 "	4.7 "	4.4 "	4.1 "	3.9 "
48"	5.1 "	4.6 "	4.3 "	4.0 "	3.7 "	3.5 "	3.3 "	5.6 "	5.1 "	4.7 "	4.4 "	4.1 "	3.9 "	3.6 "
52"	4.8 "	4.4 "	4.1 "	3.8 "	3.5 "	3.3 "	3.1 "	5.3 "	4.9 "	4.5 "	4.2 "	3.9 "	3.7 "	3.4 "
56"	4.6 "	4.2 "	3.9 "	3.6 "	3.4 "	3.2 "	3.0 "	5.1 "	4.6 "	4.3 "	4.0 "	3.7 "	3.5 "	3.3 "
60"	4.4 "	4.0 "	3.7 "	3.4 "	3.2 "	3.0 "	2.8 "	4.8 "	4.4 "	4.1 "	3.8 "	3.5 "	3.3 "	3.1 "
64"	4.2 "	3.8 "	3.5 "	3.3 "	3.1 "	2.9 "	2.7 "	4.6 "	4.2 "	3.9 "	3.6 "	3.4 "	3.2 "	3.0 "
68"	4.0 "	3.7 "	3.4 "	3.1 "	2.9 "	2.8 "	2.6 "	4.4 "	4.0 "	3.7 "	3.5 "	3.2 "	3.1 "	2.9 "
72"	3.9 "	3.5 "	3.2 "	3.0 "	2.8 "	2.7 "	2.5 "	4.3 "	3.9 "	3.6 "	3.3 "	3.1 "	2.9 "	2.8 "
76"	3.7 "	3.4 "	3.1 "	2.9 "	2.7 "	2.6 "	2.4 "	4.1 "	3.7 "	3.5 "	3.2 "	3.0 "	2.8 "	2.7 "
81"	3.6 "	3.2 "	3.0 "	2.8 "	2.6 "	2.4 "	2.3 "	3.9 "	3.6 "	3.3 "	3.1 "	2.9 "	2.7 "	2.5 "

SYSTEM REACTION DESIGN SCHEDULES:

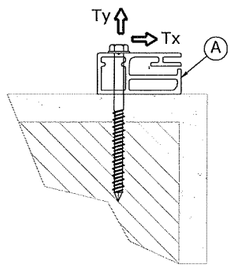

LOAD ON EXISTING STRUCTURE FROM SCREEN SYSTEM Tx = SHEAR REACTION (PLF)							
TRACK TO TRACK SPACING	DESIGN PRESSURE (+/- PSF)						
	35	40	45	50	55	60	66
36"	257	280	303	325	347	367	392
40"	275	301	325	349	372	394	420
44"	293	321	347	372	396	420	448
48"	311	340	367	394	420	445	474
52"	328	358	388	416	443	470	500
56"	344	376	407	437	466	493	526
60"	361	394	426	457	487	517	550
64"	376	412	445	478	509	539	575
68"	392	428	463	497	530	561	598
72"	407	445	481	517	550	583	622
76"	422	461	499	535	571	605	644
81"	441	482	521	559	596	632	673

LOAD ON EXISTING STRUCTURE FROM SCREEN SYSTEM Ty = TENSION REACTION (PLF)							
TRACK TO TRACK SPACING	DESIGN PRESSURE (+/- PSF)						
	35	40	45	50	55	60	66
36"	53	60	68	75	83	90	99
40"	58	67	75	83	92	100	110
44"	64	73	83	92	101	110	121
48"	70	80	90	100	110	120	132
52"	76	87	98	108	119	130	143
56"	82	93	105	117	128	140	154
60"	88	100	113	125	138	150	165
64"	93	107	120	133	147	160	176
68"	99	113	128	142	156	170	187
72"	105	120	135	150	165	180	198
76"	111	127	143	158	174	190	209
81"	118	135	152	169	186	203	223

SEE ANCHOR NOTES ON SHEET 3

FRANK L. BENNARDO, P.E.
PE96064
05/30/2013
CERT OF REG. #F-11383

FRANK L. BENNARDO, P.E.
160 SW 12th AVENUE, #106
DEERFIELD BEACH, FL 33442
PH: (954) 354-0660 FAX: (954) 354-0443
POWERED BY THE INNOVATIONS OF
ENGINEERING EXPRESS®
EXPERIENCE MORE AT WWW.ENGEXP.COM

WAYNE-DALTON
A DIVISION OF OVERHEAD DOOR CORP.
3395 ADDISON DRIVE
PENSACOLA, FL 32514

FABRIC-SHIELD STORM PANEL
TEXAS DEPARTMENT OF INSURANCE PRODUCT APPROVAL
www.wayne-dalton.com

REMARKS	DRWN	CHKD	DATE
INIT ISSUE	CSL	TSB	05-29-13

THIS DOCUMENT IS THE PROPERTY OF ENGINEERING EXPRESS AND SHALL NOT BE REPRODUCED IN WHOLE OR IN PART WITHOUT THE WRITTEN CONSENT OF ENGINEERING EXPRESS. ALTERATIONS, ADDITIONS, HOLE LIGHTING, OR OTHER MARKINGS TO THIS DOCUMENT ARE NOT PERMITTED AND INVALIDATE OUR CERTIFICATION.

COPYRIGHT ENGINEERING EXPRESS

13-WDF-03
SCALE: - 01
PAGE DESCRIPTION:
WAYNE-DALTON PART #317477
-

05/30/2013 - 10:51am chen F:\01 Project Files\Wayne-Dalton (WDF)\2013\13-WDF-03 Fabric Shield Pull Down Shutter TDI\01- Update TDI SHU-112 Fabric Shield\Drawr13-WDF-03_01b-Fabric-Shield Pull Down Shutter (TDI).dwg

SYSTEM COMPONENTS:

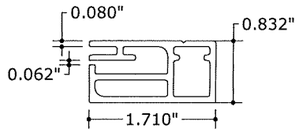

A SIDE GUIDE
6" = 1'-0" 6063-T5 ALUMINUM

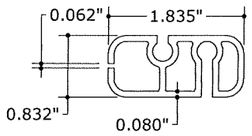

B CURTAIN BAR
6" = 1'-0" 6063-T6 ALUMINUM

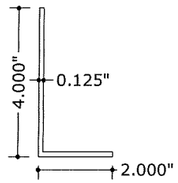

C ANGLE MOUNT
6" = 1'-0" 6063-T5 ALUMINUM

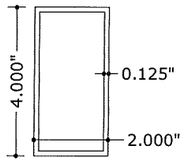

D SUPPORT TUBE
6" = 1'-0" 6063-T5 ALUMINUM

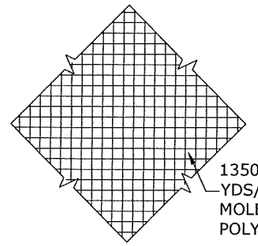

E FABRIC SHIELD
6" = 1'-0" POLYETHYLENE

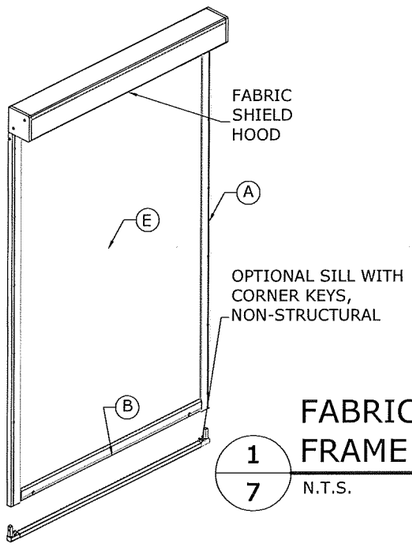

1/7 FABRIC-SHIELD FRAME ASSEMBLY
N.T.S. ISOMETRIC

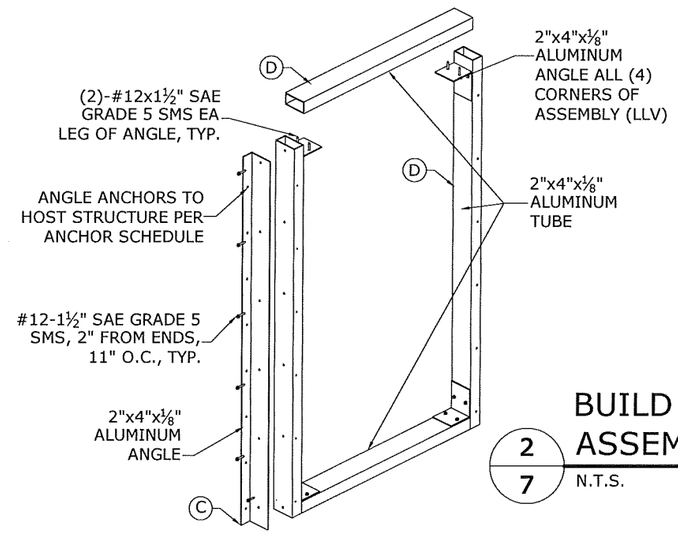

2/7 BUILD OUT TUBE ASSEMBLY
N.T.S. ISOMETRIC

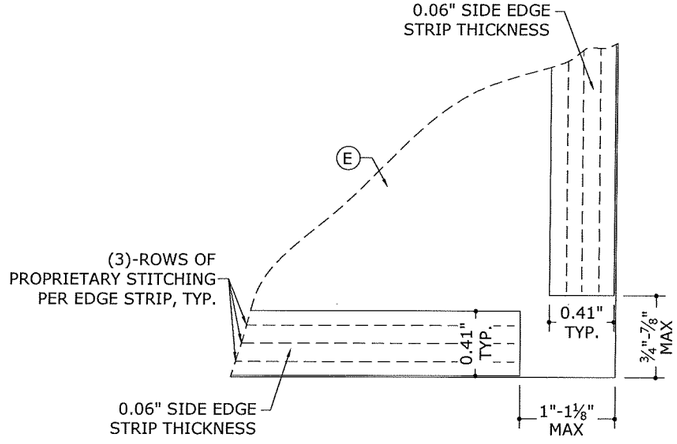

3/7 FABRIC SHIELD THICKENED EDGE
N.T.S. ISOMETRIC

FRANK L. BENNARDO, P.E.
PE96064
05/30/2013
CERT OF REG. #F-11383

FRANK L. BENNARDO, P.E.
160 SW 12th AVENUE, #106
DEERFIELD BEACH, FL 33442
PH: (954) 354-0660 FAX: (954) 354-0443
POWERED BY THE INNOVATIONS OF ENGINEERING EXPRESS®
EXPERIENCE MORE AT WWW.ENGEXP.COM

WAYNE-DALTON
A DIVISION OF OVERHEAD DOOR CORP.
3395 ADDISON DRIVE
PENSACOLA, FL 32514

FABRIC-SHIELD STORM PANEL
TEXAS DEPARTMENT OF INSURANCE PRODUCT APPROVAL
www.wayne-dalton.com

REMARKS	DRWN	CHKD	DATE
INIT ISSUE	CSL	TSB	05-29-13

THIS DOCUMENT IS THE PROPERTY OF ENGINEERING EXPRESS AND SHALL NOT BE REPRODUCED, IN WHOLE OR IN PART, WITHOUT THE WRITTEN CONSENT OF THE ENGINEER. ALTERATIONS, ADDITIONS, HIGHLIGHTING, OR OTHER MARKINGS TO THIS DOCUMENT ARE NOT PERMITTED AND INVALIDATE OUR CERTIFICATION.

COPYRIGHT ENGINEERING EXPRESS

13-WDF-03
SCALE: - 01
PAGE DESCRIPTION:
WAYNE-DALTON PART #317477
-

05/30/2013 - 10:51am chen F:\01 Project Files\Wayne-Dalton (WDF)\2013\13-WDF-03 Fabric Shield Pull Down Shutter TDI\01- Update TDI SHU-112 Fabric Shield\Draw\13-WDF-03_01b-Fabric-Shield Pull Down Shutter (TDI).dwg