QUADWALL SYSTEM – ROOF NOTES:

1. MAX. DESIGN PRESSURE APPLIES TO ASSEMBLIES SUCH THAT PURLIN & BATTEN SPACING ARE NOT EXCEED AS SHOWN HEREIN.
2. MAX. DESIGN PRESSURES INDICATED ARE FOR POSITIVE AND NEGATIVE LOADS.
3. STRUCTURAL ADEQUACY OF SUPPORTING SUBSTRUCTURE IS NOT PART OF THIS APPROVAL AND SHALL BE REVIEWED BY THE AUTHORITY HAVING JURISDICTION.
4. ALUMINUM TUBE FRAMING IS MINIMUM 1/8" THICK, 6005–T5 ALLOY.

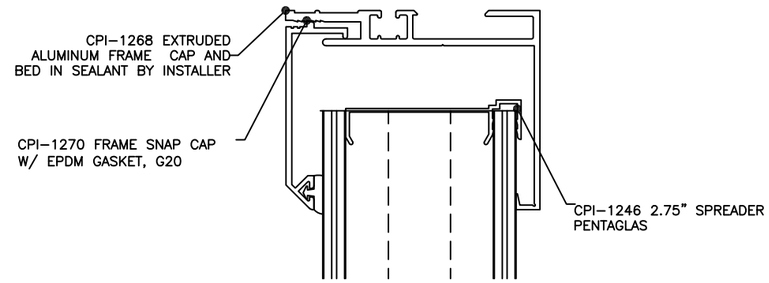

A 1 SECTION @ TOP

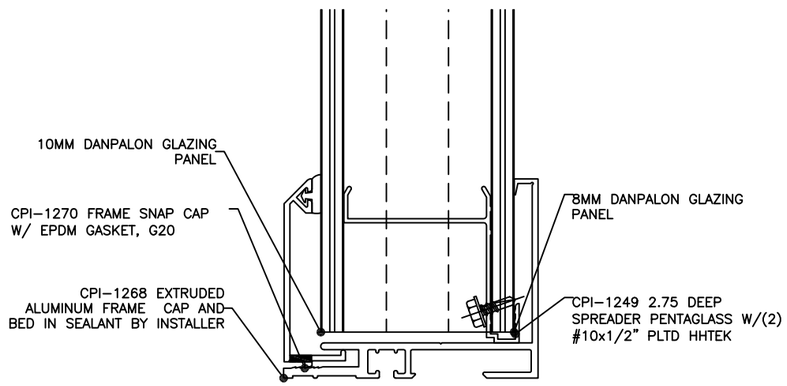

B 1 SECTION @ BOTTOM

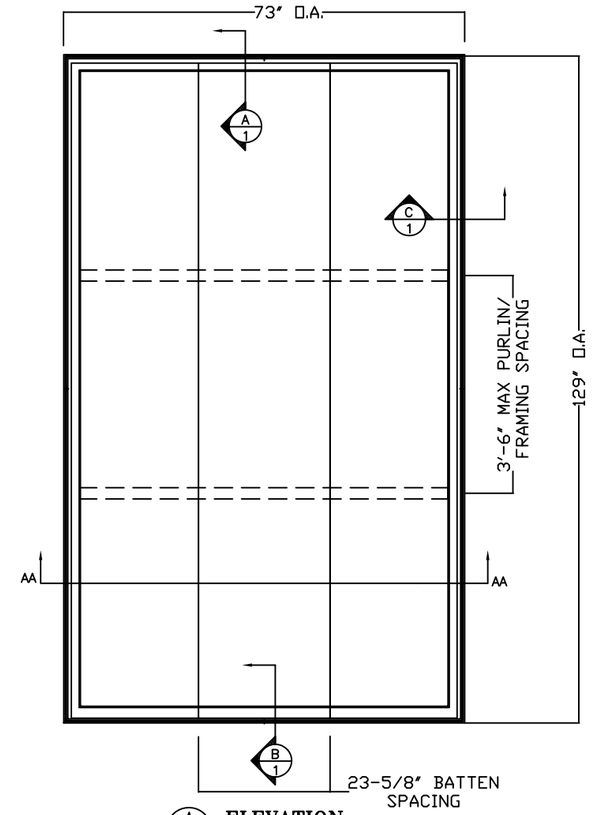

A 1 ELEVATION

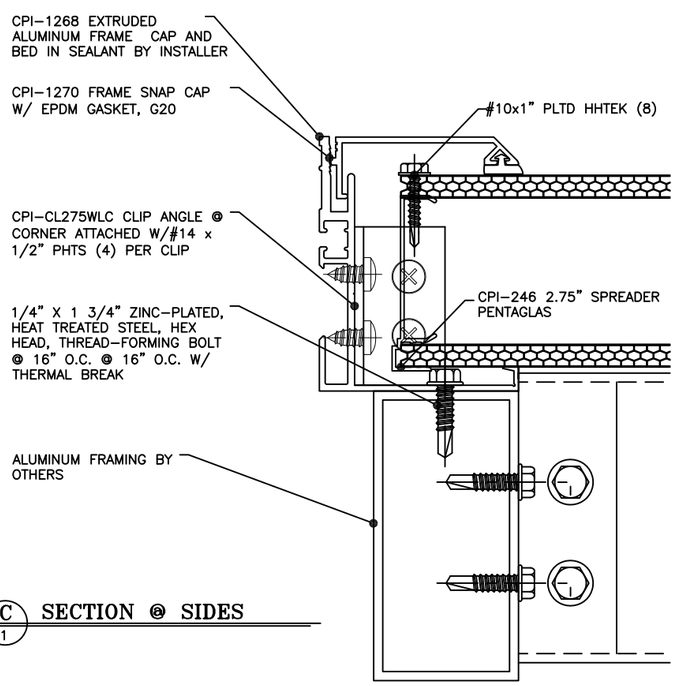

C 1 SECTION @ SIDES

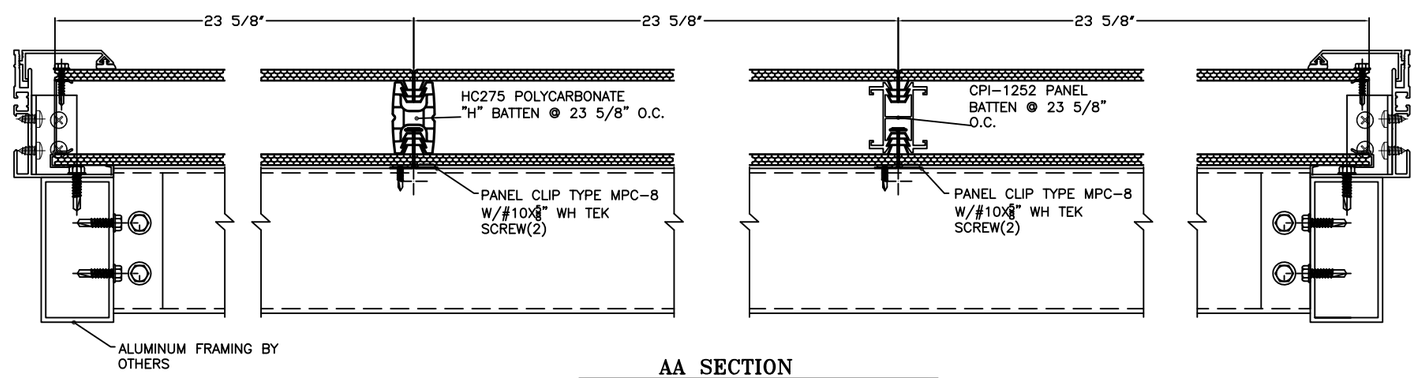

AA SECTION
HALF SCALE

Design Load (PSF) With 1.5x Safety Factor	Maximum Purlin Spacing	Maximum Grid Size
69.3 PSF	3'6"	23–5/8" x 42"

Digitally signed by Hermes F Norero, P.E.
Reason: I am approving this document
Date: 2016.01.31 20:42:57 -05'00'

STATE OF TEXAS
HERMES F. NORERO
118471
LICENSED
PROFESSIONAL ENGINEER
HERMES F. NORERO
Norero & Assoc.
398 E. Dania Beach Blvd. #338
Dania Beach, FL 33004
TBPE Firm# 13734

REV.	DESCRIPTION	DATE
A	REV. PER TDI COMMENTS	01.13.16

CPI Daylighting
Made with Nano-Cell Technology
Quality Comes to Light
28862 N. BALLARD DR. – LAKE FOREST, IL 60045 – (847) 816–1080 • FAX (847) 816–0425

QUADWALL INSTALLATION INSTRUCTION
WALL OR ROOF APPLICATION

PROJECT:
ARCHITECT: PHONE #: NO PHONE FOUND
CUSTOMER: PHONE #: NO PHONE FOUND
CONTRACTOR: PHONE #: NO PHONE FOUND

JOB NO. REV.
DRAWN BY JKM
DATE 03/17/14
PROJECT MGR
DATE
SHEET NO.
1 OF 1