Large Missile Impact Resistant Max rated design pressure : +53.0 / -112.0 PSF

Legend

1. A & B are the model size of the vent.
2. The table to the right shows the principle dimensions for IV hurricane vents
3. The maximum vent weight and maximum curb weight are taken from the largest model sizes in each row
4. All dimensions listed, except for E,H, & J, are related to the throat dimensions, A & B

General Notes:

1. Product evaluated in accordance with requirements of 2006 International Building Code and ASCE 7-05.

2. Roof structure must be designed for weight of unit and wind load reactions transferred from the unit.

3. Product evaluated for the structural capacity of the exterior housing only. Interior mechanisms and/or electrical components have not been evaluated.

4. All fasteners must be corrosion resistant.

EV Hurricane Vents

Size	A	B	C	D	E	F	G	H	J	C1	C2	C3	C4	Max Vent Weight	Max Curb Weight	Max Fan Weight	# 1/4" Sheet Metal Screws*
0854	08	54	26	77	8	16	62	33	42	23	68	15	60	53	62	115	28
0954	09	54	26	77	8	17	62	33	42	23	68	16	60	59	63	122	28
1054	10	54	26	77	8	18	62	33	42	23	68	17	60	65	63	128	28
1154	11	54	26	77	8	19	62	33	42	23	68	18	60	70	64	134	30
1254	12	54	26	77	8	20	62	33	42	23	68	19	60	76	65	141	30
1354	13	54	26	77	8	21	62	33	42	24	68	20	60	80	65	145	30
1454	14	54	26	77	8	22	62	33	42	25	68	21	60	84	67	151	30
1554	15	54	26	77	8	23	62	33	42	26	68	22	60	85	67	152	30
1654	16	54	27	77	8	24	62	33	42	27	68	23	60	86	68	154	30
1754	17	54	29	77	8	25	62	33	42	28	68	24	60	90	68	158	32
1854	18	54	30	77	8	26	62	33	42	29	68	25	60	94	70	164	32
1954	19	54	32	77	9	27	62	33	42	30	68	26	60	101	71	172	32
2054	20	54	33	77	9	28	62	33	42	31	68	27	60	109	71	180	32
2154	21	54	35	77	9	29	62	33	42	32	68	28	60	119	72	191	32
2254	22	54	36	77	9	30	62	33	42	33	68	29	60	129	72	201	32
2354	23	54	38	77	11	31	62	34	42	34	68	30	60	137	73	210	34
2454	24	54	39	77	11	32	62	34	42	35	68	31	60	146	73	219	34
2554	25	54	42	77	13	33	62	36	42	36	68	32	60	150	75	225	34
2654	26	54	43	77	13	34	62	36	42	37	68	33	60	153	75	228	34
2754	27	54	44	77	13	35	62	36	42	38	68	34	60	157	76	233	34
2854	28	54	45	77	13	36	62	36	42	39	68	35	60	161	78	239	34
2954	29	54	47	77	13	37	62	36	42	40	68	36	60	165	78	243	36
3054	30	54	48	77	13	38	62	36	42	41	68	37	60	169	79	248	36
3154	31	54	50	77	15	39	62	38	42	42	68	38	60	173	79	252	36
3254	32	54	51	77	15	40	62	38	42	43	68	39	60	177	81	258	36
3354	33	54	52	77	15	41	62	38	42	44	68	40	60	181	81	262	36
3454	34	54	53	77	15	42	62	38	42	45	68	41	60	185	82	267	36
3554	35	54	54	77	15	43	62	38	42	46	68	42	60	189	84	273	38
3654	36	54	55	77	15	44	62	38	42	47	68	43	60	193	84	277	38
3754	37	54	56	77	15	45	62	38	42	48	68	44	60	198	85	283	38
3854	38	54	57	77	15	46	62	38	42	49	68	45	60	202	85	287	38
3954	39	54	58	77	15	47	62	38	42	50	68	46	60	207	86	293	38
4054	40	54	59	77	15	48	62	38	42	51	68	47	60	211	86	297	38
4154	41	54	61	77	15	49	62	38	42	52	68	48	60	216	88	304	40
4254	42	54	62	77	15	50	62	38	42	53	68	49	60	220	88	308	40
4354	43	54	65	77	17	51	62	40	42	54	68	50	60	224	89	313	40
4454	44	54	66	77	17	52	62	40	42	55	68	51	60	228	91	319	40
4554	45	54	67	77	17	53	62	40	42	56	68	52	60	233	91	324	40
4654	46	54	68	77	17	54	62	40	42	57	68	53	60	237	92	329	40
4754	47	54	69	77	17	55	62	40	42	58	68	54	60	241	92	333	42
4854	48	54	70	77	17	56	62	40	42	59	68	55	60	246	94	340	42
4954	49	54	72	77	19	57	62	42	42	60	68	56	60	251	94	345	42
5054	50	54	73	77	19	58	62	42	42	61	68	57	60	255	95	350	42
5154	51	54	74	77	19	59	62	42	42	62	68	58	60	260	97	357	42
5254	52	54	75	77	19	60	62	42	42	63	68	59	60	265	97	362	42
5354	53	54	76	77	19	61	62	42	42	64	68	60	60	270	98	368	44
5454	54	54	77	77	19	62	62	42	42	65	68	61	60	275	98	373	44

B A

ALL DIMENSIONS ARE IN INCHES UNLESS OTHERWISE NOTED *VENT CURB TO ROOF CURB ANCHORS

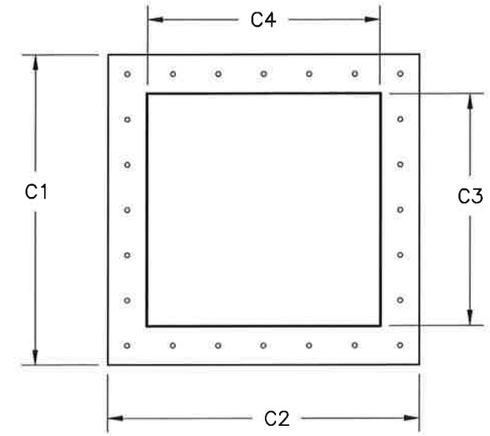

Plan View - Curb Installation

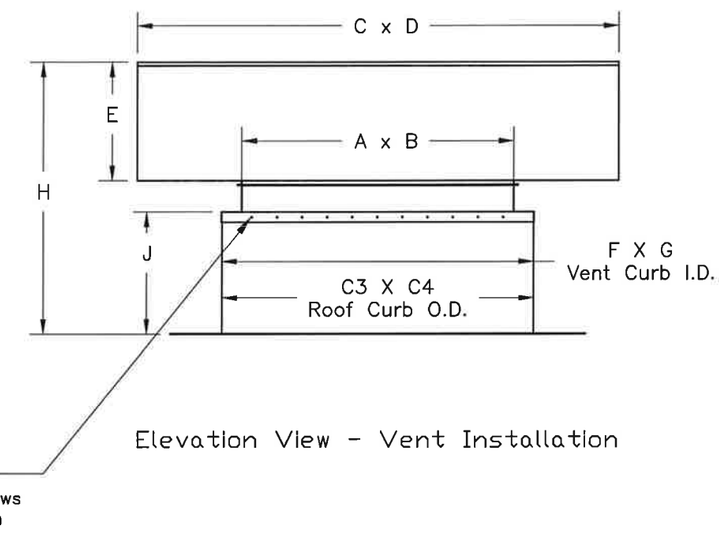

Elevation View - Vent Installation

STATE OF TEXAS
JOSEPH A. REED
100777
LICENSED
PROFESSIONAL ENGINEER
3/7/17

Joseph A. Reed, PE
TX PE 100777
Architectural Testing, Inc.
TX Firm F-11869
130 Derry Ct.
York, PA 17404
717-764-7700

Project No.: E8434.05-122-34

DWG NO. 686789	Sheet 1/7
TITLE EV & IV HURRICANE VENTS	
MAT'L	
DRAFTER TGB	DATE 3/5/13
DESIGN ENG. TGB 3/5/13	RELEASED
CHKD BY / MFG.	SCALE NTS

LET.	REVISION RECORD	BY	CKD.	DATE
A	Changed Number of Anchors based on C3 & C4	TGB	TCR	4/24/13
B	Added sizes 0854-1154	TGB	TCR	6/19/13
C	Inserted Year 2010 to FBC.	TGB	TCR	6/27/14
D	REVISED TO MEET FLORIDA BUILDING CODE 2014	TCR	TGB	6/2/15
E	REVISED FOR 42" TALL CURBS	TCR	TGB	6/30/15
G	WOOD SCREW PENETRATION AND CONCRETE STRENGTH	TCR	TGB	3/1/17

Acme Engineering & Manufacturing Corp.
1820 N. York Street
Muskogee, OK 74403
918-682-7791

Large Missile Impact Resistant Max rated design pressure : +53.0 / -112.0 PSF

Legend

1. A & B are the model size of the vent.
2. The table to the right shows the principle dimensions for IV hurricane vents
3. The maximum vent weight and maximum curb weight are taken from the largest model sizes in each row
4. All dimensions listed, except for E,H, & J, are related to the throat dimensions, A & B

IV Hurricane Vents

Size	A	B	C	D	E	F	G	H	J	C1	C2	C3	C4	Max Vent Weight	Max Curb Weight	Max Fan Weight	# 1/4" Sheet Metal Screws*
0854	08	54	26	95	8	16	62	33	42	23	68	15	60	49	62	111	28
0954	09	54	26	95	8	17	62	33	42	23	68	16	60	55	63	118	28
1054	10	54	26	95	8	18	62	33	42	23	68	17	60	65	63	128	28
1154	11	54	28	95	8	19	62	33	42	23	68	18	60	75	64	139	30
1254	12	54	29	95	8	20	62	33	42	23	68	19	60	75	65	140	30
1354	13	54	31	95	8	21	62	33	42	24	68	20	60	80	65	145	30
1454	14	54	32	95	8	22	62	33	42	25	68	21	60	85	67	152	30
1554	15	54	35	95	9	23	62	33	42	26	68	22	60	92	67	159	30
1654	16	54	36	95	9	24	62	33	42	27	68	23	60	97	68	165	30
1754	17	54	39	95	10	25	62	33	42	28	68	24	60	111	68	179	32
1854	18	54	40	95	10	26	62	33	42	29	68	25	60	109	70	179	32
1954	19	54	42	95	11	27	62	34	42	30	68	26	60	132	71	203	32
2054	20	54	43	95	11	28	62	34	42	31	68	27	60	130	71	201	32
2154	21	54	45	95	11	29	62	34	42	32	68	28	60	152	72	224	32
2254	22	54	46	95	11	30	62	34	42	33	68	29	60	150	72	222	32
2354	23	54	49	95	11	31	62	34	42	34	68	30	60	173	73	246	34
2454	24	54	50	95	11	32	62	34	42	35	68	31	60	171	73	244	34
2554	25	54	53	95	13	33	62	36	42	36	68	32	60	177	75	252	34
2654	26	54	54	95	13	34	62	36	42	37	68	33	60	184	75	259	34
2754	27	54	55	95	13	35	62	36	42	38	68	34	60	191	76	267	34
2854	28	54	56	95	13	36	62	36	42	39	68	35	60	189	78	267	34
2954	29	54	59	95	13	37	62	36	42	40	68	36	60	199	78	277	36
3054	30	54	60	95	13	38	62	36	42	41	68	37	60	198	79	277	36
3154	31	54	64	95	15	39	62	38	42	42	68	38	60	202	79	281	36
3254	32	54	65	95	15	40	62	38	42	43	68	39	60	209	81	290	36
3354	33	54	66	95	15	41	62	38	42	44	68	40	60	215	81	296	36
3454	34	54	67	95	15	42	62	38	42	45	68	41	60	221	82	303	36
3554	35	54	68	95	15	43	62	38	42	46	68	42	60	227	84	311	38
3654	36	54	69	95	15	44	62	38	42	47	68	43	60	227	84	311	38
3754	37	54	71	95	17	45	62	40	42	48	68	44	60	234	85	319	38
3854	38	54	72	95	17	46	62	40	42	49	68	45	60	240	85	325	38
3954	39	54	73	95	17	47	62	40	42	50	68	46	60	246	86	332	38
4054	40	54	74	95	17	48	62	40	42	51	68	47	60	248	86	334	38
4154	41	54	77	95	18	49	62	41	42	52	68	48	60	256	88	344	40
4254	42	54	78	95	18	50	62	41	42	53	68	49	60	268	88	356	40
4354	43	54	82	95	20	51	62	43	42	54	68	50	60	260	89	349	40
4454	44	54	83	95	20	52	62	43	42	55	68	51	60	266	91	357	40
4554	45	54	84	95	20	53	62	43	42	56	68	52	60	272	91	363	40
4654	46	54	85	95	20	54	62	43	42	57	68	53	60	278	92	370	40
4754	47	54	86	95	20	55	62	43	42	58	68	54	60	283	92	375	42
4854	48	54	87	95	20	56	62	43	42	59	68	55	60	289	94	383	42
4954	49	54	90	95	23	57	62	46	42	60	68	56	60	291	94	385	42
5054	50	54	91	95	23	58	62	46	42	61	68	57	60	297	95	392	42
5154	51	54	92	95	23	59	62	46	42	62	68	58	60	302	97	399	42
5254	52	54	93	95	23	60	62	46	42	63	68	59	60	312	97	409	42
5354	53	54	94	95	23	61	62	46	42	64	68	60	60	312	98	410	44
5454	54	54	95	95	23	62	62	46	42	65	68	61	60	323	98	421	44

ALL DIMENSIONS ARE IN INCHES UNLESS OTHERWISE NOTED *VENT CURB TO ROOF CURB ANCHORS

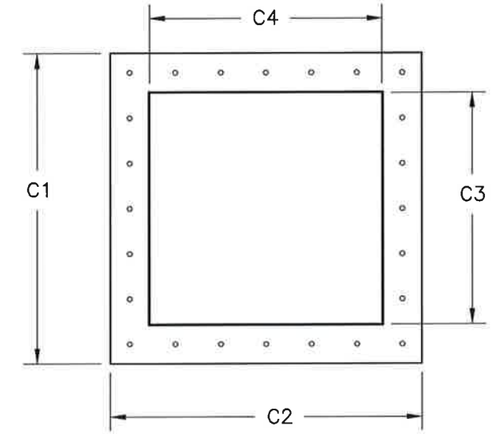

Plan View - Curb Installation

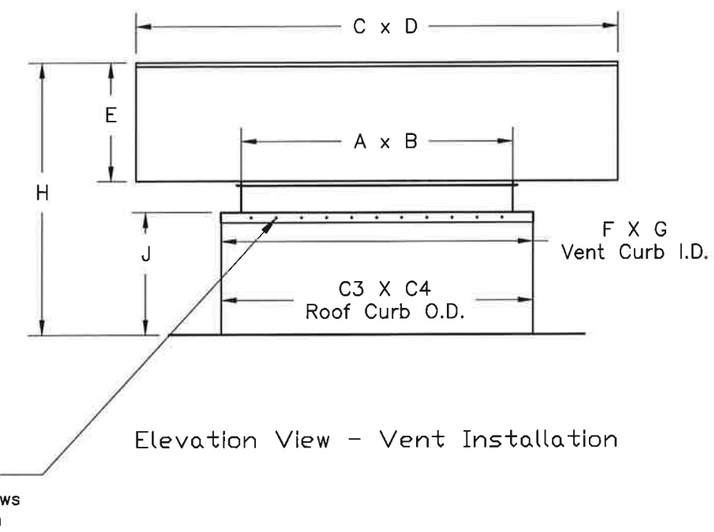

Elevation View - Vent Installation

Dimensions (inches)

STATE OF TEXAS
JOSEPH A. REED
100777
LICENSED
PROFESSIONAL ENGINEER
3/7/17

Joseph A. Reed, PE
TX PE 100777
Architectural Testing, Inc.
TX Firm F-11869
130 Derry Ct.
York, PA 17404
717-764-7700
Project No.: E8434.05-122-34

DWG NO.	686789 Sheet 2/7
TITLE	EV & IV HURRICANE VENTS
MAT'L	
DRAFTER	TGB
DATE	3/5/13
DESIGN ENG.	TGB 3/5/13
RELEASED	
CHKD BY	
MFG.	
SCALE	NTS

LET.	REVISION RECORD	BY	CKD.	DATE
A	Changed Number of Anchors based on C3 & C4	TGB	TCR	4/24/13
B	Added sizes 0854-1154	TGB	TCR	6/19/13
C	Inserted Year 2010 to FBC.	TGB	TCR	6/27/14
D	REVISED TO MEET FLORIDA BUILDING CODE 2014	TCR	TGB	6/2/15
E	REVISED FOR 42" TALL CURBS	TCR	TGB	6/30/15
G	WOOD SCREW PENETRATION AND CONCRETE STRENGTH	TCR	TGB	3/1/17

Acme Engineering &
Manufacturing Corp.
1820 N. York Street
Muskogee, OK 74403
918-682-7791

Large Missile Impact Resistant
Max rated design pressure : +53.0 / −112.0 PSF

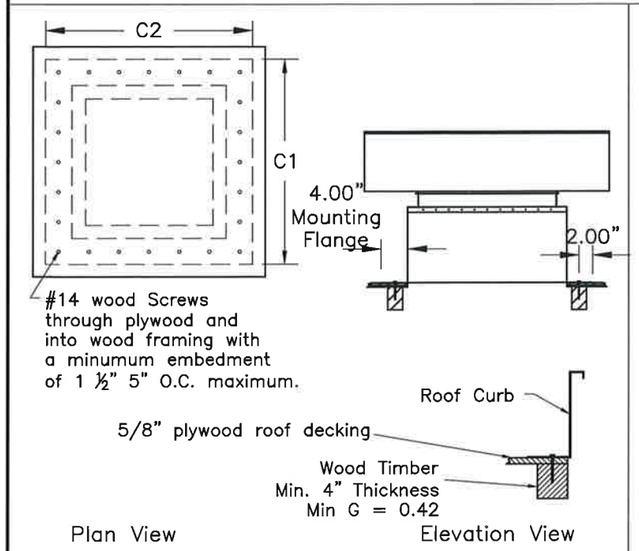

Wood Deck Installation

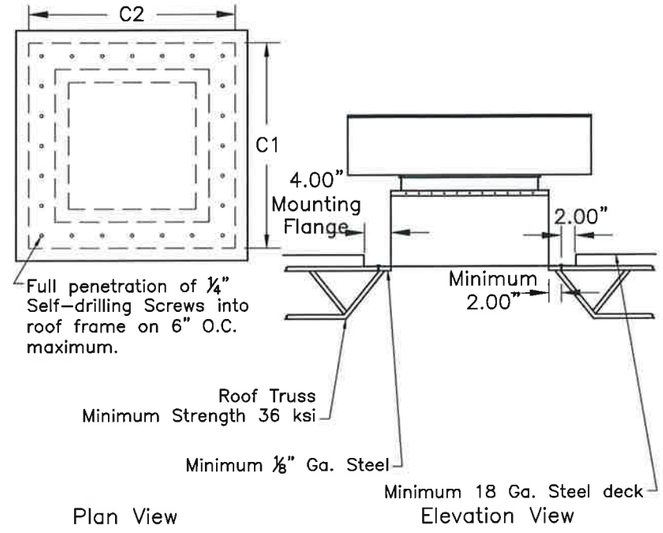

Metal Building Installation

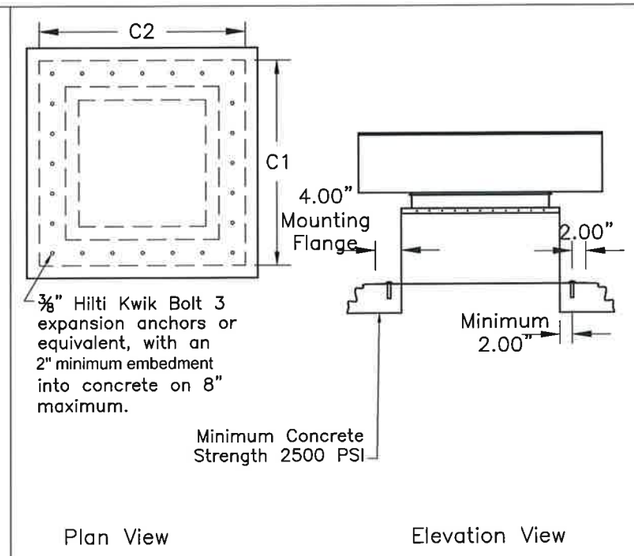

Concrete Deck Installation

Roof Curb Connection Anchors IV-EV

Installation Type			Wood Deck	Metal Building	Concrete Deck
Anchor Type			#14 X 2" Wood Screws	1/4" Self Drilling Screws	3/8" Hilti Kwik Bolt 3 or Equiv
Size	C1	C2	# Anchors	# Anchors	# Anchors
0854	23	68	38	32	24
0954	23	68	38	32	24
1054	23	68	38	32	24
1154	23	68	38	32	24
1254	23	68	38	32	24
1354	24	68	38	32	24
1454	25	68	38	34	26
1554	26	68	40	34	26
1654	27	68	40	34	26
1754	28	68	40	34	26
1854	29	68	40	34	26
1954	30	68	40	34	26
2054	31	68	42	34	26
2154	32	68	42	34	26
2254	33	68	42	36	28
2354	34	68	42	36	28
2454	35	68	42	36	28
2554	36	68	44	36	28
2654	37	68	44	36	28
2754	38	68	44	36	28
2854	39	68	44	36	28
2954	40	68	44	36	28
3054	41	68	46	38	30
3154	42	68	46	38	30
3254	43	68	46	38	30
3354	44	68	46	38	30
3454	45	68	46	38	30
3554	46	68	46	38	30
3654	47	68	46	38	30
3754	48	68	46	38	30
3854	49	68	48	40	32
3954	50	68	48	40	32
4054	51	68	48	40	32
4154	52	68	48	40	32
4254	53	68	48	40	32
4354	54	68	48	40	32
4454	55	68	48	40	32
4554	56	68	48	40	32
4654	57	68	50	42	34
4754	58	68	50	42	34
4854	59	68	50	42	34
4954	60	68	50	42	34
5054	61	68	56	42	34
5154	62	68	56	42	34
5254	63	68	56	42	34
5354	64	68	56	42	34
5454	65	68	56	44	34

DIMENSIONS ARE IN INCHES UNLESS OTHERWISE SPECIFIED

Joseph A. Reed, PE
TX PE 100777
Architectural Testing, Inc.
TX Firm F-11869
130 Derry Ct.
York, PA 17404
717-764-7700
Project No.: E8434.05-122-34

DWG NO. 686789	Sheet 3/7
TITLE EV & IV Hurricane Vents	
MAT'L	
DRAFTER TGB	DATE 3/5/13
DESIGN ENG. TGB 3/5/13	RELEASED
CHKD BY / MFG.	SCALE NTS

LET.	REVISION RECORD	BY	CKD.	DATE
A	No Changes Required.	TGB	TCR	4/24/13
B	Added Sizes 0854–1154	TGB	TCR	6/19/13
C	Added Fastener O.C. Notes.	TGB	TCR	6/27/14
D	REVISED TO MEET FLORIDA BUILDING CODE 2014	TCR	TGB	6/2/15
E	REVISED FOR 42" TALL CURBS	TCR	TGB	6/30/15
G	WOOD SCREW PENETRATION AND CONCRETE STRENGTH	TCR	TGB	3/1/17

Acme Engineering &
Manufacturing Corp.
1820 N. York Street
Muskogee, OK 74403
918-682-7791

Large Missile Impact Resistant
Max rated design pressure : +53.0 / -112.0 PSF

Item	Part Description	Material Description
1	Vent wall	0.062 Aluminum 3003-H14
2	End bracket	0.096 Aluminum 3003-H14
3	Intermediate Bracket	0.083 Aluminum 3003-H14
4	Hood Strut #1	0.084 Aluminum 3003-H14
5	Hood Strut #2	0.095 Aluminum 3003-H14
6	Hood Strut #3	0.091 Aluminum 3003-H14
7	Hood Strut #4	0.092 Aluminum 3003-H14
8	Hood Strut #5	0.094 Aluminum 3003-H14
9	Mounting Strut	0.129 Aluminum 6065-T6 Extruded Channel
10	Curb Side wall	0.047 G90 Galvanized Steel (30,000 psi yield)
11	Bird Screen	0.036 Aluminum Wire Mesh
12	Bird Screen Retainer	0.078 Aluminum 3003-H14
13	Curb Cap	0.077 Aluminum 3003-H14

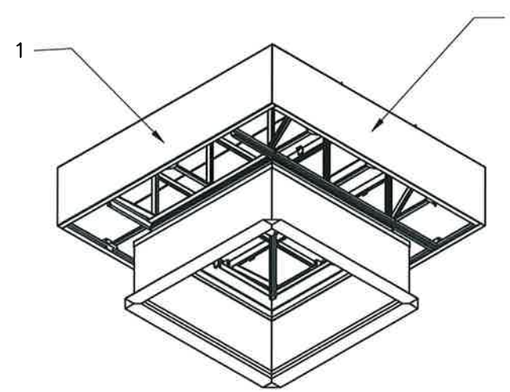

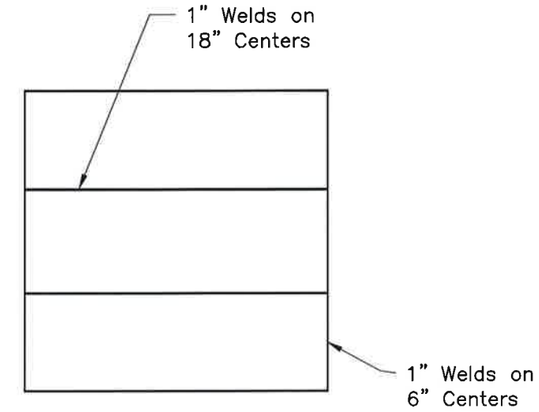

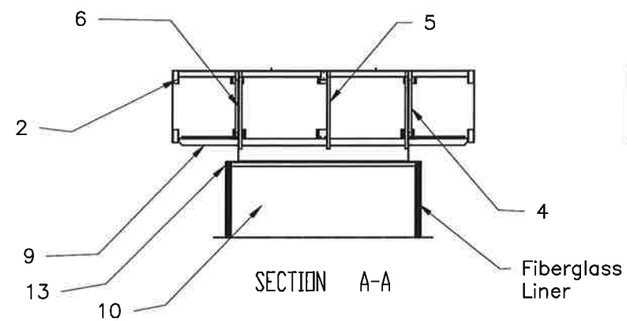

SECTION A-A

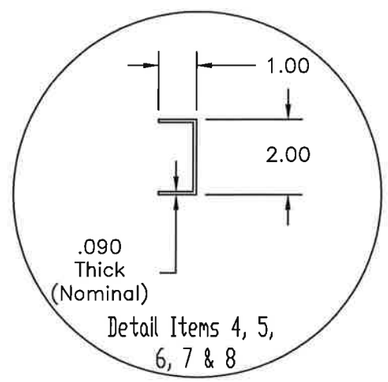

Detail Items 4, 5, 6, 7 & 8

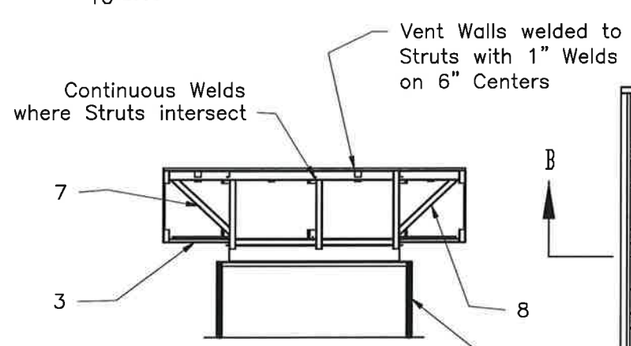

SECTION B-B

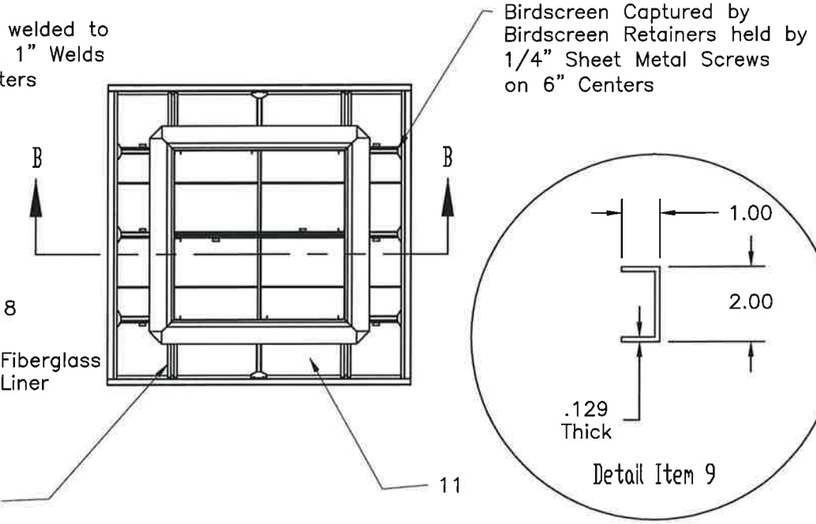

Detail Item 9

STATE OF TEXAS
JOSEPH A. REED
100777
LICENSED
PROFESSIONAL ENGINEER
3/7/17

Joseph A. Reed, PE
TX PE 100777
Architectural Testing, Inc.
TX Firm F-11869
130 Derry Ct.
York, PA 17404
717-764-7700

Project No.: E8434.05-122-34

DWG NO. 686789	Sheet 4/7
TITLE EV & IV HURRICANE VENTS	
MAT'L	
DRAFTER TCR	DATE 03/05/13
DESIGN ENG. TCR 03/05/13	RELEASED
CHKD BY / MFG.	SCALE NTS

LET.	REVISION RECORD	BY	CKD.	DATE
A	ADDED SECTION DETAILS FOR ITEMS 4 - 8	TCR	TGB	4/24/13
B	NO CHANGES THIS REVISION	TGB	TCR	6/19/13
C	INSERTED YEAR 2010 TO FBC.	TGB	TCR	6/27/14
D	REVISED TO MEET FLORIDA BUILDING CODE 2014	TCR	TGB	6/2/15
E	NO CHANGES THIS REVISION	TCR	TGB	6/30/15
G	WOOD SCREW PENETRATION AND CONCRETE STRENGTH	TCR	TGB	3/1/17

Acme Engineering &
Manufacturing Corp.
1820 N. York Street
Muskogee, OK 74403
918-682-7791

Large Missile Impact Resistant
Max rated design pressure:
+53.0 / -112.0 PSF

Legend

1. A & B are the model size of the vent.
2. The table to the right shows the principle dimensions for LEV & LIV hurricane vents
3. The maximum vent weight and maximum curb weight are taken from the largest model sizes in each row
4. All dimensions listed, except for E,H, & J, are related to the throat dimensions, A & B

LEV & LIV Hurricane Vents

Size	A	B	C	D	# of tiers	E	F	G	H	J	C1	C2	C3	C4	Max Vent Weight	Max Curb Weight	Max Fan Weight	# Anchors (1/4" SMS)*
0860	8	60	21.75	73.75	9	32.7	16	68	50	42	23.7	74.5	15.7	67.7	140	68	208	30
0960	9	60	22.75	73.75	9	32.7	17	68	50	42	24.7	74.5	16.7	67.7	145	69	214	30
1060	10	60	23.75	73.75	9	32.7	18	68	50	42	25.7	74.5	17.7	67.7	145	69	214	30
1160	11	60	24.75	73.75	9	32.7	19	68	50	42	26.7	74.5	18.7	67.7	145	70	215	32
1260	12	60	25.75	73.75	9	32.7	20	68	50	42	27.7	74.5	19.7	67.7	145	70	215	32
1360	13	60	26.75	73.75	9	32.7	21	68	50	42	28.7	74.5	20.7	67.7	150	71	221	32
1460	14	60	27.75	73.75	9	32.7	22	68	50	42	29.7	74.5	21.7	67.7	150	71	221	32
1560	15	60	28.75	73.75	9	32.7	23	68	50	42	30.7	74.5	22.7	67.7	150	72	222	32
1660	16	60	29.75	73.75	9	32.7	24	68	50	42	31.7	74.5	23.7	67.7	150	72	222	32
1760	17	60	30.75	73.75	9	32.7	25	68	50	42	32.7	74.5	24.7	67.7	160	73	233	34
1860	18	60	31.75	73.75	9	32.7	26	68	50	42	33.7	74.5	25.7	67.7	160	73	233	34
1960	19	60	32.75	73.75	9	32.7	27	68	50	42	34.7	74.5	26.7	67.7	160	75	235	34
2060	20	60	33.75	73.75	9	32.7	28	68	50	42	35.7	74.5	27.7	67.7	160	75	235	34
2160	21	60	34.75	73.75	9	32.7	29	68	50	42	36.7	74.5	28.7	67.7	165	76	241	34
2260	22	60	35.75	73.75	9	32.7	30	68	50	42	37.7	74.5	29.7	67.7	165	78	243	34
2360	23	60	36.75	73.75	9	32.7	31	68	50	42	38.7	74.5	30.7	67.7	165	78	243	36
2460	24	60	37.75	73.75	9	32.7	32	68	50	42	39.7	74.5	31.7	67.7	165	79	244	36
2560	25	60	38.75	73.75	9	32.7	33	68	50	42	40.7	74.5	32.7	67.7	172	79	251	36
2660	26	60	39.75	73.75	9	32.7	34	68	50	42	41.7	74.5	33.7	67.7	172	81	253	36
2760	27	60	40.75	73.75	9	32.7	35	68	50	42	42.7	74.5	34.7	67.7	172	81	253	36
2860	28	60	41.75	73.75	9	32.7	36	68	50	42	43.7	74.5	35.7	67.7	172	82	254	36
2960	29	60	42.75	73.75	9	32.7	37	68	50	42	44.7	74.5	36.7	67.7	178	84	262	38
3060	30	60	43.75	73.75	9	32.7	38	68	50	42	45.7	74.5	37.7	67.7	178	84	262	38
3160	31	60	44.75	73.75	9	32.7	39	68	50	42	46.7	74.5	38.7	67.7	178	85	263	38
3260	32	60	45.75	73.75	9	32.7	40	68	50	42	47.7	74.5	39.7	67.7	178	85	263	38
3360	33	60	46.75	73.75	9	32.7	41	68	50	42	48.7	74.5	40.7	67.7	184	86	270	38
3460	34	60	47.75	73.75	9	32.7	42	68	50	42	49.7	74.5	41.7	67.7	184	86	270	38
3560	35	60	48.75	73.75	9	32.7	43	68	50	42	50.7	74.5	42.7	67.7	184	88	272	40
3660	36	60	49.75	73.75	9	32.7	44	68	50	42	51.7	74.5	43.7	67.7	184	88	272	40
3760	37	60	50.75	73.75	9	32.7	45	68	50	42	52.7	74.5	44.7	67.7	192	89	281	40
3860	38	60	51.75	73.75	9	32.7	46	68	50	42	53.7	74.5	45.7	67.7	192	91	283	40
3960	39	60	52.75	73.75	9	32.7	47	68	50	42	54.7	74.5	46.7	67.7	192	91	283	40
4060	40	60	53.75	73.75	9	32.7	48	68	50	42	55.7	74.5	47.7	67.7	192	92	284	40
4160	41	60	54.75	73.75	9	32.7	49	68	50	42	56.7	74.5	48.7	67.7	200	92	292	42
4260	42	60	55.75	73.75	9	32.7	50	68	50	42	57.7	74.5	49.7	67.7	200	94	294	42
4360	43	60	56.75	73.75	9	32.7	51	68	50	42	58.7	74.5	50.7	67.7	200	94	294	42
4460	44	60	57.75	73.75	9	32.7	52	68	50	42	59.7	74.5	51.7	67.7	200	95	295	42
4560	45	60	58.75	73.75	9	32.7	53	68	50	42	60.7	74.5	52.7	67.7	205	97	302	42
4660	46	60	59.75	73.75	9	32.7	54	68	50	42	61.7	74.5	53.7	67.7	205	97	302	42
4760	47	60	60.75	73.75	9	32.7	55	68	50	42	62.7	74.5	54.7	67.7	205	98	303	44
4860	48	60	61.75	73.75	9	32.7	56	68	50	42	63.7	74.5	55.7	67.7	205	98	303	44
4960	49	60	62.75	73.75	9	32.7	57	68	50	42	64.7	74.5	56.7	67.7	212	100	312	44
5060	50	60	63.75	73.75	9	32.7	58	68	50	42	65.7	74.5	57.7	67.7	212	100	312	44
5160	51	60	64.75	73.75	9	32.7	59	68	50	42	66.7	74.5	58.7	67.7	212	100	312	44
5260	52	60	65.75	73.75	9	32.7	60	68	50	42	67.7	74.5	59.7	67.7	212	100	312	44
5360	53	60	66.75	73.75	9	32.7	61	68	50	42	68.7	74.5	60.7	67.7	218	102	320	46
5460	54	60	67.75	73.75	9	32.7	62	68	50	42	69.7	74.5	61.7	67.7	218	103	321	46
5560	55	60	68.75	73.75	9	32.7	63	68	50	42	70.7	74.5	62.7	67.7	218	103	321	46
5660	56	60	69.75	73.75	9	32.7	64	68	50	42	71.7	74.5	63.7	67.7	218	105	323	46
5760	57	60	70.75	73.75	9	32.7	65	68	50	42	72.7	74.5	64.7	67.7	224	105	329	46
5860	58	60	71.75	73.75	9	32.7	66	68	50	42	73.7	74.5	65.7	67.7	224	106	330	46
5960	59	60	72.75	73.75	9	32.7	67	68	50	42	74.7	74.5	66.7	67.7	224	106	330	48
6060	60	60	73.75	73.75	9	32.7	68	68	50	42	75.7	74.5	67.7	67.7	224	108	332	48

ALL DIMENSIONS ARE IN INCHES UNLESS OTHERWISE NOTED

*VENT CURB TO ROOF CURB ANCHORS

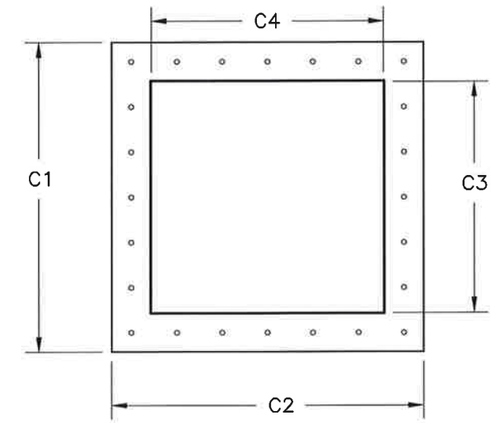

Plan View - Curb Installation

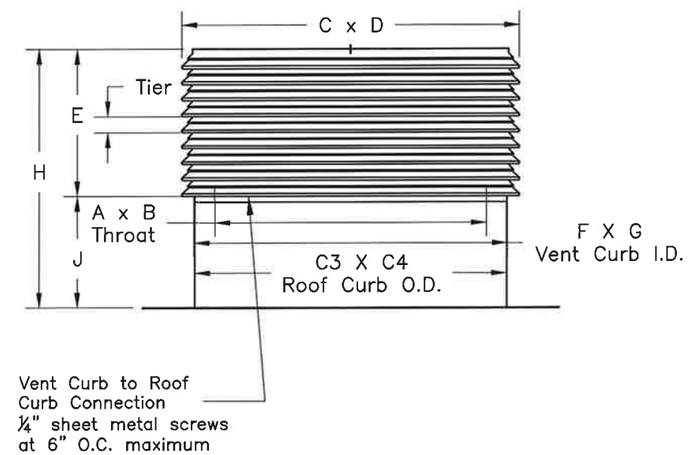

Elevation View - Vent Installation

Dimensions (inches)

STATE OF TEXAS
JOSEPH A. REED
100777
LICENSED
PROFESSIONAL ENGINEER
3/7/17

Joseph A. Reed, PE
TX PE 100777
Architectural Testing, Inc.
TX Firm F-11869
130 Derry Ct.
York, PA 17404
717-764-7700

Project No.: E8434.05-122-34

DWG NO. 686789	Sheet 5/7
TITLE LEV & LIV HURRICANE VENTS	
MAT'L	
DRAFTER TGB	DATE 3/5/13
DESIGN ENG. TGB 3/5/13	RELEASED
CHKD BY / MFG.	SCALE NTS

LET.	REVISION RECORD	BY	CKD.	DATE
A	Changed Number of Anchors based on C3 & C4	TGB	TCR	4/24/13
B	Added sizes 0860-1160	TGB	TCR	6/19/13
C	Inserted Year 2010 to FBC.	TGB	TCR	6/27/14
D	REVISED TO MEET FLORIDA BUILDING CODE 2014	TCR	TGB	6/2/15
E	REVISED FOR 42" TALL CURBS	TCR	TGB	6/30/15
G	WOOD SCREW PENETRATION AND CONCRETE STRENGTH	TCR	TGB	3/1/17

Acme Engineering &
Manufacturing Corp.
1820 N. York Street
Muskogee, OK 74403
918-682-7791

Large Missile Impact Resistant
Max rated design pressure : +53.0 / −112.0 PSF

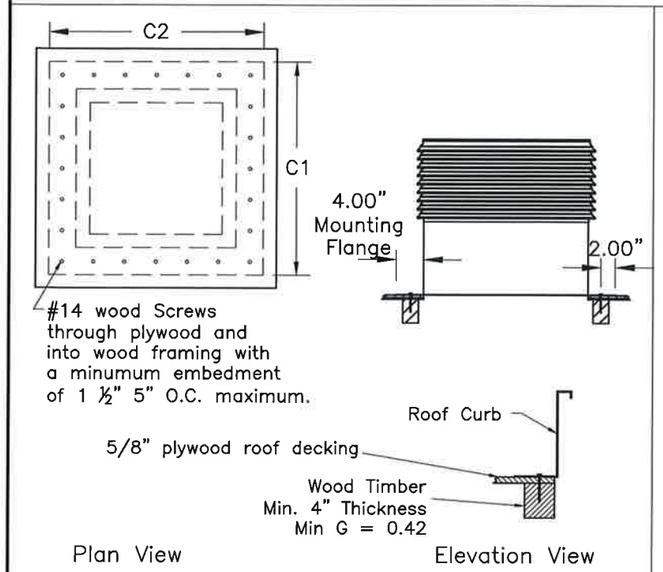

Wood Deck Installation

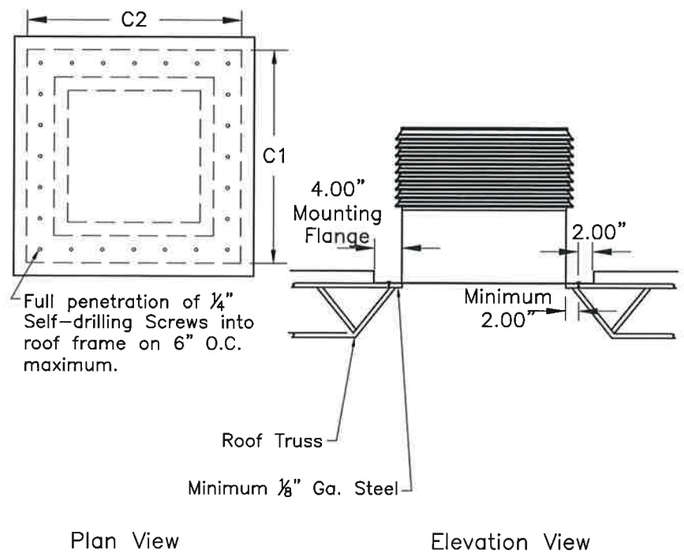

Metal Building Installation

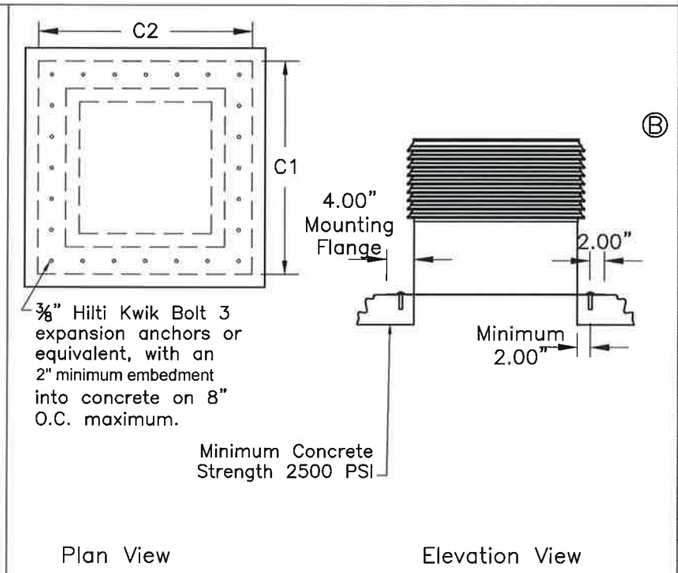

Concrete Deck Installation

Ⓑ

Roof Curb Connection Anchors LEV-LIV

Installation Type			Wood Deck	Metal Building	Concrete Deck
Anchor Type			#14 X 2" Wood Screws	1/4" Self Drilling Screws	3/8" Hilti Kwik Bolt 3 or Equiv
Size	C1	C2	# Anchors	# Anchors	# Anchors
0860	23.7	74.5	50	34	26
0960	24.7	74.5	50	34	28
1060	25.7	74.5	50	36	28
1160	26.7	74.5	50	36	28
1260	27.7	74.5	50	36	28
1360	28.7	74.5	50	36	28
1460	29.7	74.5	50	36	28
1560	30.7	74.5	50	36	28
1660	31.7	74.5	50	36	28
1760	32.7	74.5	50	38	30
1860	33.7	74.5	50	38	30
1960	34.7	74.5	50	38	30
2060	35.7	74.5	50	38	30
2160	36.7	74.5	50	38	30
2260	37.7	74.5	50	38	30
2360	38.7	74.5	50	38	30
2460	39.7	74.5	50	38	30
2560	40.7	74.5	50	40	32
2660	41.7	74.5	50	40	32
2760	42.7	74.5	50	40	32
2860	43.7	74.5	50	40	32
2960	44.7	74.5	50	40	32
3060	45.7	74.5	50	40	32
3160	46.7	74.5	50	40	32
3260	47.7	74.5	50	40	32
3360	48.7	74.5	50	42	34
3460	49.7	74.5	50	42	34
3560	50.7	74.5	50	42	34
3660	51.7	74.5	50	42	34
3760	52.7	74.5	50	42	34
3860	53.7	74.5	50	42	34
3960	54.7	74.5	50	42	34
4060	55.7	74.5	50	42	34
4160	56.7	74.5	50	44	36
4260	57.7	74.5	50	44	36
4360	58.7	74.5	50	44	36
4460	59.7	74.5	50	44	36
4560	60.7	74.5	58	44	36
4660	61.7	74.5	58	44	36
4760	62.7	74.5	58	44	36
4860	63.7	74.5	58	44	36
4960	64.7	74.5	58	46	38
5060	65.7	74.5	60	46	38
5160	66.7	74.5	60	46	38
5260	67.7	74.5	60	46	38
5360	68.7	74.5	60	46	38
5460	69.7	74.5	60	46	38
5560	70.7	74.5	64	46	38
5660	71.7	74.5	64	46	38
5760	72.7	74.5	64	48	40
5860	73.7	74.5	64	48	40
5960	74.7	74.5	64	48	40
6060	75.7	74.5	64	50	40

DIMENSIONS ARE IN INCHES UNLESS OTHERWISE SPECIFIED

Joseph A. Reed, PE
TX PE 100777
Architectural Testing, Inc.
TX Firm F-11869
130 Derry Ct.
York, PA 17404
717-764-7700

Project No.: E8434.05-122-34

DWG NO. 686789	Sheet 6/7
TITLE LEV & LIV Hurricane Vents	
MAT'L	
DRAFTER TGB	DATE 3/5/13
DESIGN ENG. TGB 3/5/13	RELEASED
CHKD BY / MFG.	SCALE NTS

LET.	REVISION RECORD	BY	CKD.	DATE
A	No Changes Required.	TGB	TCR	4/24/13
B	Added Sizes 0860–1160	TGB	TCR	6/19/13
C	Added Fastener O.C. Notes	TGB	TCR	6/27/14
D	REVISED TO MEET FLORIDA BUILDING CODE 2014	TCR	TGB	6/2/15
E	REVISED FOR 42" TALL CURBS	TCR	TGB	6/30/15
G	WOOD SCREW PENETRATION AND CONCRETE STRENGTH	TCR	TGB	3/1/17

Acme Engineering & Manufacturing Corp.
1820 N. York Street
Muskogee, OK 74403
918-682-7791

Large Missile Impact Resistant
Max rated design pressure : +53.0 / -112.0 PSF

Item	Part Description	Material Description
1	Louver	0.077 Aluminum 6065-T6 Extrusion
2	Corner Strut	0.113 Aluminum 3003-H14
3	Single Strut	0.148 Aluminum 3003-H14
4	Double Strut	0.111 Aluminum 3003-H15
5	Curb Side Wall	0.047 G90 Galvanized Steel (30,000 psi yield)
6	Bird Screen	0.036 Aluminum Wire Mesh
7	Top Cap	0.062 Aluminum 3003-H14
8	Curb Cap	0.077 Aluminum 3003-H14

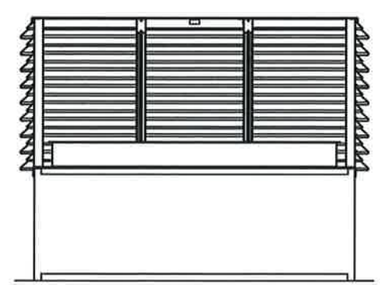

SECTION A-A

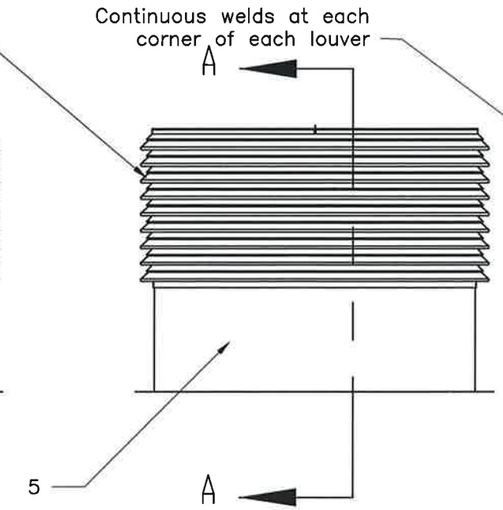

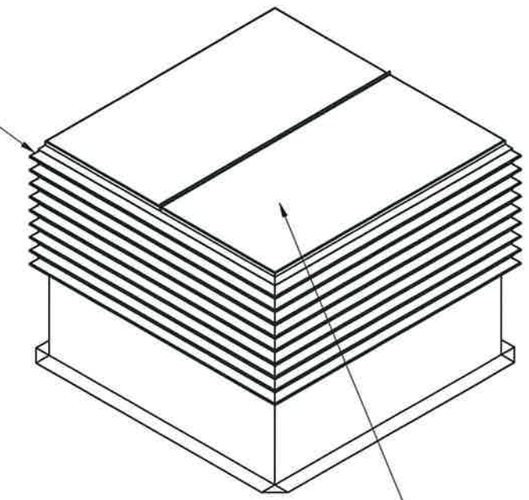

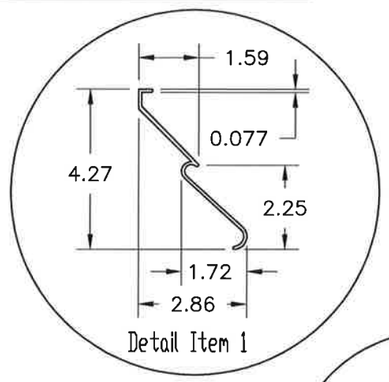

Detail Item 1

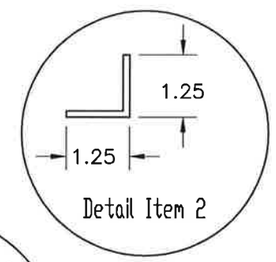

Detail Item 2

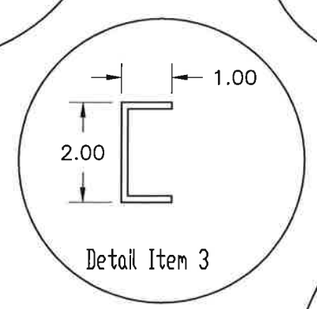

Detail Item 3

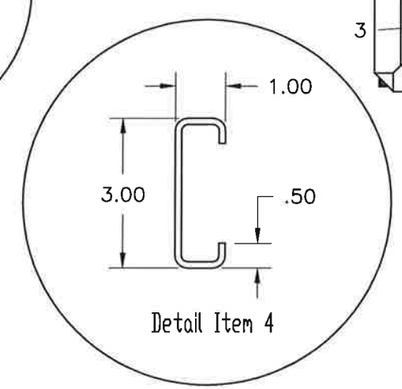

Detail Item 4

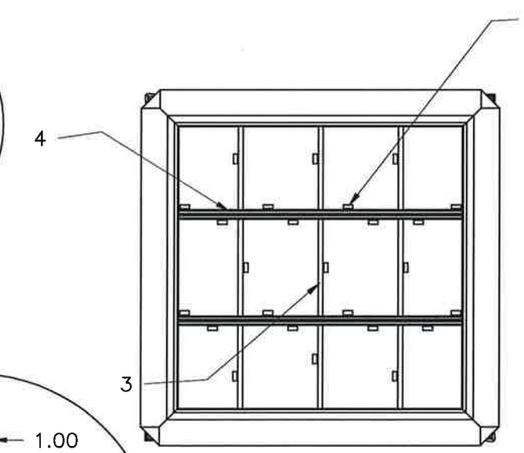

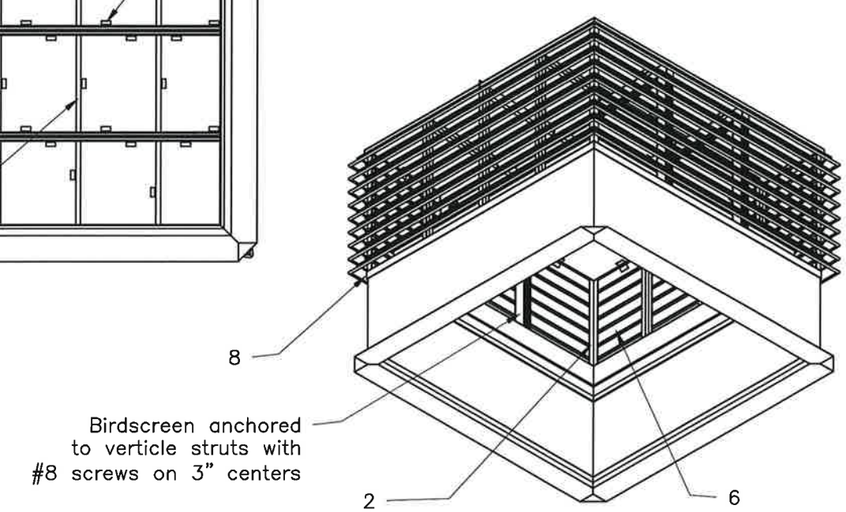

STATE OF TEXAS
JOSEPH A. REED
100777
LICENSED
PROFESSIONAL ENGINEER
3/1/17

Joseph A. Reed, PE
TX PE 100777
Architectural Testing, Inc.
TX Firm F-11869
130 Derry Ct.
York, PA 17404
717-764-7700

Project No.: E8434.05-122-34

DWG NO.	686789 Sheet 7/7
TITLE	LEV & LIV HURRICANE VENTS
MAT'L	
DRAFTER	TCR
DATE	03/05/13
DESIGN ENG.	TCR 03/05/13
RELEASED	
CHKD BY	
MFG.	
SCALE	NTS

LET.	REVISION RECORD	BY	CKD.	DATE
A	ADDED SECTION DETAILS FOR ITEMS 2, 3, AND 4	TCR	TGB	4/24/13
B	NO CHANGES THIS REVISION	TGB	TCR	6/19/13
C	INSERTED YEAR 2010 TO FBC.	TGB	TCR	6/27/14
D	REVISED TO MEET FLORIDA BUILDING CODE 2014	TCR	TGB	6/2/15
E	NO CHANGES FOR THIS REVISION	TCR	TGB	6/30/15
G	WOOD SCREW PENETRATION AND CONCRETE STRENGTH	TCR	TGB	3/1/17

Acme Engineering & Manufacturing Corp.
1820 N. York Street
Muskogee, OK 74403
918-682-7791