Large Missile Impact Resistant
Max rated design pressure : +53.0 / −112.0 PSF

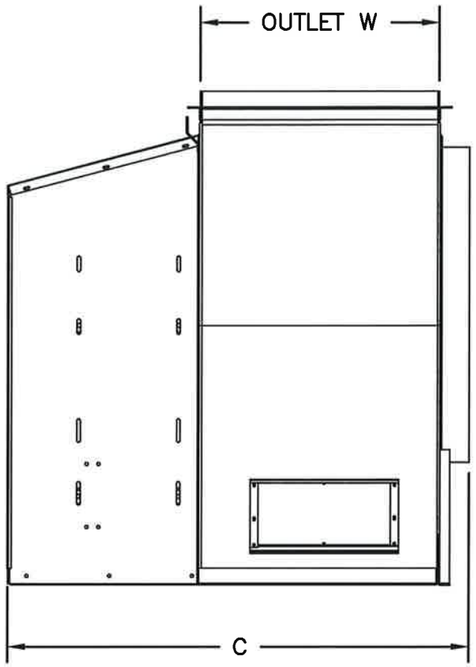

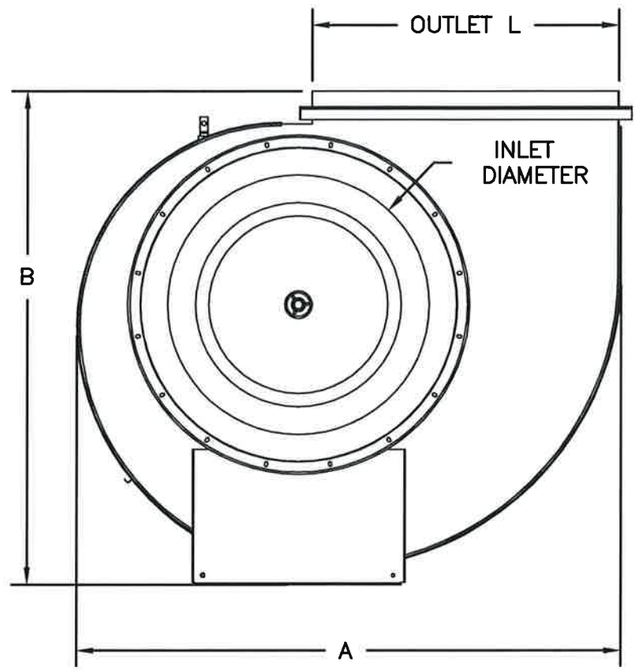

DIMENSIONAL DATA							
MODELS	A	B	C	INLET DIA	OUTLET L X W		EST UNIT WEIGHT (lbs.)
QBR100H	18.94	20.69	18.86	10.13	10.56	7	91
QBR137H	25.9	27.36	25.47	15.13	14.52	10.81	142
QBR161H	30.52	32.26	29.41	16.88	17.16	12.75	190
QBR200H	37.64	38.7	34.93	21.31	21.22	15.75	270
QBR245H	46	48.58	41.42	26.38	26	19.24	356
QBR270H	50.66	53.12	43.33	30.19	28.66	21.15	391
QBR300H	56.22	62.49	47.46	31.69	31.84	23.52	536
QBR330H	61.81	64.35	49.82	36.19	35.02	25.88	585
QBR365H	68.33	70.72	53.55	40.19	38.73	29.61	689
3012H	25.19	33.25	35	13.5	12.94	9.75	160
3013H	27.63	34.06	36.12	14.75	14.25	10.88	180
3015H, 8115H	30.63	35.19	37	16.25	15.88	11.75	221
3016H	33.44	36.19	38.38	18.25	17.38	13.13	252
3018H, 8118H	35	38	45	20	19.25	14.5	275
3020H, 8120H	39	43	47	22	21.13	16	330
3022H, 8122H	43	45	49	24	23.5	17.63	380
3024H, 8124H	47	52	54	27	25.88	19.5	520
3027H, 8127H	52	53	56	30	28.5	21.5	580
3030H, 8130H	58	60	60	33	31.63	23.63	775
3033H, 8133H	63	69	66	36	34.88	26.25	950
3037H, 8137H	70	71	68	39	38.5	28.88	1050
QBR100SEH	18.94	20.69	21.86	10.13	10.56	7	93
QBR137SEH	25.9	27.36	28.47	15.13	14.52	10.81	145
QBR161SEH	30.52	32.26	32.41	16.88	17.16	12.75	194
QBR200SEH	37.64	38.7	37.93	21.31	21.22	15.75	275
QBR245SEH	46	48.58	44.42	26.38	26	19.24	363
QBR270SEH	50.66	53.12	46.33	30.19	28.66	21.15	399
QBR300SEH	56.22	62.49	50.46	31.69	31.84	23.52	547
QBR330SEH	61.81	64.35	52.82	36.19	35.02	25.88	597
QBR365SEH	68.33	70.72	56.55	40.19	38.73	29.61	703
8115SEH	30.63	35.19	40	16.25	15.88	11.75	225
8118SEH	35	38	48	20	19.25	14.5	281
8120SEH	39	43	50	22	21.13	16	337
8122SEH	43	45	52	24	23.5	17.63	388
8124SEH	47	52	57	27	25.88	19.5	530
8127SEH	52	53	59	30	28.5	21.5	592
8130SEH	58	60	63	33	31.63	23.63	791
8133SEH	63	69	69	36	34.88	26.25	969
8137SEH	70	71	71	39	38.5	28.88	1071

Dimensions are in inches unless otherwise noted.

Joseph A. Reed, PE
TX PE 100777
Architectural Testing, Inc.
TX Firm F-11869
130 Derry Ct.
York, PA 17404
717-764-7700
Project No.: E8434.06-122-34

General Notes:

1. Product evaluated in accordance with requirements of 2006 International Building Code and ASCE 7–05.

2. Roof structure must be designed for weight of unit and wind load reactions transferred from the unit.

3. Product evaluated for the structural capacity of the exterior housing only. Interior mechananisms and/or electrical components have not been evaluated.

4. All fasteners must be corrosion resistant.

DWG NO.	646020 Sheet 1/9
TITLE	QBR, 3000, 8100 ROOFTOP FANS
MAT'L	
DRAFTER	BPF
DATE	5/19/11
DESIGN ENG.	TCR 5/19/11
RELEASED	
CHKD BY	
MFG.	
SCALE	NTS

LET.	REVISION RECORD	BY	CKD.	DATE
A	Revisions per Miami–Dade	BPF	TCR	2/27/12
B	Revision to sheet 6 line 12 per Miami Dade.	TCR	TGB	1/24/13
C	Revisions to sheet 5 concerning isolators.	TCR	TGB	8/5/14
D	REVISED FOR FBC 2014	TCR	TGB	6/2/15
E	ADDED SHEET 9	TCR	TGB	12/4/15
F	Revisions to sheets 5 & 9 per Miami Dade.	TGB	TCR	5/19/16
G	Revisions to sheet 9 per Miami Dade.	TGB	TCR	8/23/16
H	WOOD SCREW PENETRATION AND CONCRETE STRENGTH	TGB	TCR	3/1/17

Acme Engineering &
Manufacturing Corp.
1820 N. York Street
Muskogee, OK 74403
918-682-7791

Large Missile Impact Resistant
Max rated design pressure : +53.0 / −112.0 PSF

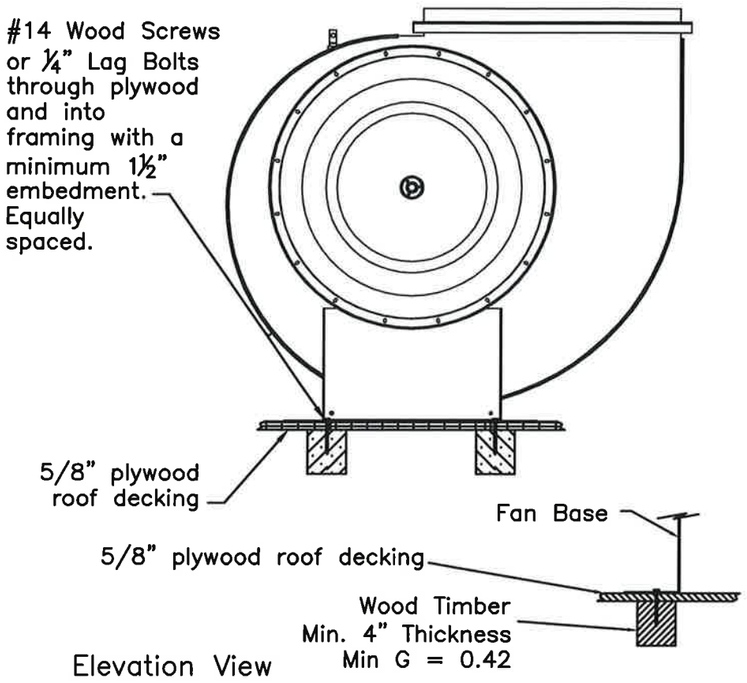

Elevation View

Wood Deck Installation

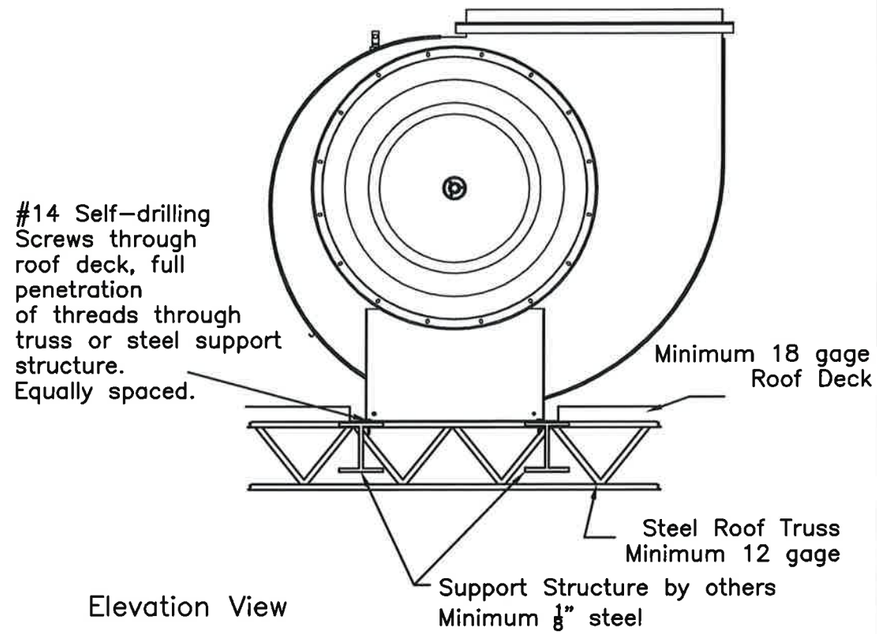

Elevation View

Metal Building Installation

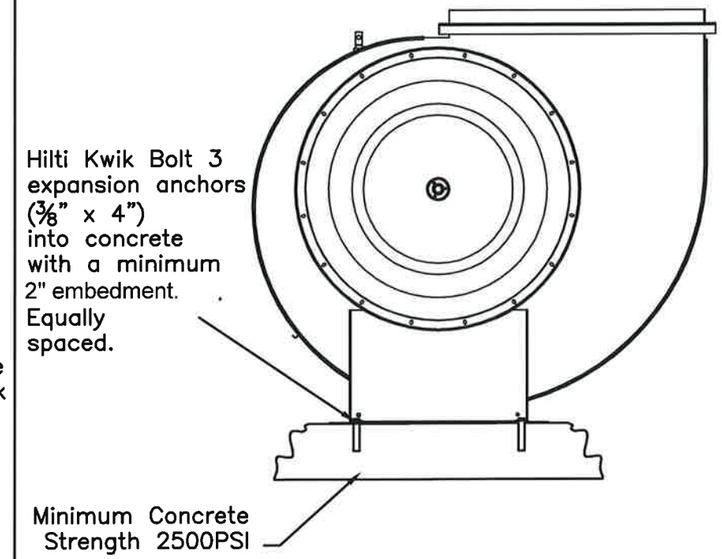

Elevation View

Concrete Deck Installation

STATE OF TEXAS
JOSEPH A. REED
100777
LICENSED
PROFESSIONAL ENGINEER
3/1/17

Joseph A. Reed, PE
TX PE 100777
Architectural Testing, Inc.
TX Firm F-11869
130 Derry Ct.
York, PA 17404
717-764-7700

Project No.: E8434.06-122-34

DWG NO.	646020 Sheet 2/9
TITLE	QBR, 3000, 8100 ROOFTOP FANS
MAT'L	
DRAFTER	BPF
DATE	3-9-11
DESIGN ENG.	TCR 3-9-11
RELEASED	
CHKD BY	
MFG.	
SCALE	NTS

LET.	REVISION RECORD	BY	CKD.	DATE
A	Revisions per Miami-Dade	BPF	TCR	2/27/12
B	Revision to sheet 6 line 12 per Miami Dade.	TCR	TGB	1/24/13
C	Revisions to sheet 5 concerning isolators.	TCR	TGB	8/5/14
D	REVISED FOR FBC 2014	TCR	TGB	6/2/15
E	ADDED SHEET 9	TCR	TGB	12/4/15
F	Revisions to sheets 5 & 9 per Miami Dade.	TGB	TCR	5/19/16
G	Revisions to sheet 9 per Miami Dade.	TGB	TCR	8/23/16
H	WOOD SCREW PENETRATION AND CONCRETE STRENGTH	TGB	TCR	3/1/17

Acme Engineering & Manufacturing Corp.
1820 N. York Street
Muskogee, OK 74403
918-682-7791

Large Missile Impact Resistant
Max rated design pressure : +53.0 / −112.0 PSF

FOUNDATION PLAN - CONCRETE

SMOKE EXHAUST MODELS - FOUNDATION PLAN & FASTENERS FOR CONCRETE						
Model	*BOLT SIZE*	*CC*	*BC*	*BD*	*BE*	*BF*
QBR100SEH	3/8"	5.06	4.25	7.69	17.44	-
QBR137SEH	3/8"	7	6.19	9.5	22	-
QBR161SEH	3/8"	8.31	7	11	24.5	-
QBR200SEH	3/8"	9.5	7.88	12.94	27.44	-
QBR245SEH	3/8"	10	10.5	15.19	30.5	-
QBR270SEH	3/8"	10.03	11.63	16.31	33.31	-
QBR300SEH	3/8"	11.56	12.63	16.38	26.76	37.14
QBR330SEH	3/8"	11.56	14	17.5	27.88	38.23
QBR365SEH	3/8"	12.06	15.69	19.56	29.94	40.32
8115SEH	3/8"	8.25	0	8	14.5	-
8118SEH	3/8"	9.75	8.5	9.38	17	-
8120SEH	3/8"	9.75	9.25	10.13	17	-
8122SEH	3/8"	9.75	10.06	10.94	17	-
8124SEH	3/8"	11.5	11	11.94	21	-
8127SEH	3/8"	11.5	12	12.94	21	-
8130SEH	3/8"	11.5	13.06	14	21	-
MODEL	*BOLT SIZE*	*L*	*Q*	*R*	*S*	*U*
8133SEH	3/8"	21.5	14.34	4.25	24.81	14.19
8137SEH	3/8"	23.25	15.66	4.25	24.81	14.19

STANDARD MODELS - FOUNDATION PLAN & FASTENERS FOR CONCRETE						
Model	*BOLT SIZE*	*CC*	*BC*	*BD*	*BE*	*BF*
QBR100H	3/8"	5.06	4.25	4.69	14.44	-
QBR137H	3/8"	7	6.19	6.5	19	-
QBR161H	3/8"	8.31	7	8	21.5	-
QBR200H	3/8"	9.5	7.88	9.94	24.44	-
QBR245H	3/8"	10	10.5	12.19	27.5	-
QBR270H	3/8"	10.03	11.63	13.31	30.31	-
QBR300H	3/8"	11.56	12.63	13.38	23.76	34.14
QBR330H	3/8"	11.56	14	14.5	24.88	35.23
QBR365H	3/8"	12.06	15.69	16.56	26.94	37.32
3012H	3/8"	8.25	0	7	14.5	-
3013H	3/8"	8.25	0	7.56	14.5	-
3015H, 8115H	3/8"	8.25	0	8	14.5	-
3016H	3/8"	8.25	0	8.69	14.5	-
3018H, 8118H	3/8"	9.75	8.5	9.38	17	-
3020H, 8120H	3/8"	9.75	9.25	10.13	17	-
3022H, 8122H	3/8"	9.75	10.06	10.94	17	-
3024H, 8124H	3/8"	11.5	11	11.94	21	-
3027H, 8127H	3/8"	11.5	12	12.94	21	-
3030H, 8130H	3/8"	11.5	13.06	14	21	-
MODEL	*BOLT SIZE*	*L*	*Q*	*R*	*S*	*U*
3033H, 8133H	3/8"	21.5	14.34	4.25	24.81	14.19
3037H, 8137H	3/8"	23.25	15.66	4.25	24.81	14.19

Dimensions are in inches unless otherwise noted.

Footprint should be referenced for the quantity of bolts required for mounting.

o = 9/16" holes for 1/2" bolts

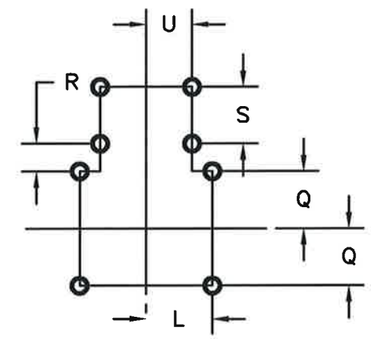

SIZES 3033–3037
SIZES 8133–8137

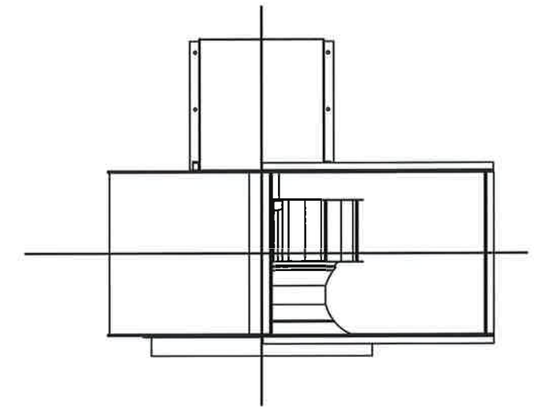

PLAN VIEW

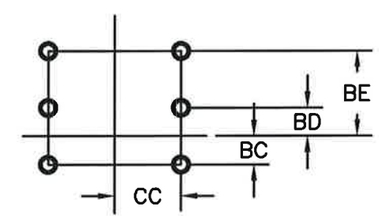

SIZES QBR 100–270
SIZES 3012–3016
SIZES 8115

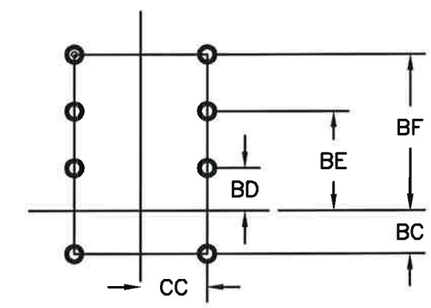

SIZES QBR 300–365
SIZES 3018–3030
SIZES 8118–8130

STATE OF TEXAS
JOSEPH A. REED
100777
LICENSED
PROFESSIONAL ENGINEER
3/7/17

Joseph A. Reed, PE
TX PE 100777
Architectural Testing, Inc.
TX Firm F-11869
130 Derry Ct.
York, PA 17404
717-764-7700

Project No.: E8434.06-122-34

DWG NO. 646020	Sheet 3/9
TITLE QBR, 3000, 8100 ROOFTOP FANS	
MAT'L	
DRAFTER BPF	DATE 5/20/11
DESIGN ENG. TCR 5/20/11	RELEASED
CHKD BY / MFG.	SCALE NTS

LET.	REVISION RECORD	BY	CKD.	DATE
A	Revisions per Miami–Dade	BPF	TCR	2/27/12
B	Revision to sheet 6 line 12 per Miami Dade.	TCR	TGB	1/24/13
C	Revisions to sheet 5 concerning isolators.	TCR	TGB	8/5/14
D	REVISED FOR FBC 2014	TCR	TGB	6/2/15
E	ADDED SHEET 9	TCR	TGB	12/4/15
F	Revisions to sheets 5 & 9 per Miami Dade.	TGB	TCR	5/19/16
G	Revisions to sheet 9 per Miami Dade.	TGB	TCR	8/23/16
H	WOOD SCREW PENETRATION AND CONCRETE STRENGTH	TGB	TCR	3/1/17

Acme Engineering & Manufacturing Corp.
1820 N. York Street
Muskogee, OK 74403
918-682-7791

Large Missile Impact Resistant
Max rated design pressure : +53.0 / −112.0 PSF

FOUNDATION PLAN – WOOD & STEEL

SMOKE EXHAUST MODELS - FOUNDATION PLAN & FASTENERS FOR WOOD/STEEL

Model	Screw Size	# of Screws	CC	BC	BD	BE	BF
QBR100SEH	1/4"	8	5.06	4.25	7.69	17.44	-
QBR137SEH	1/4"	8	7	6.19	9.5	22	-
QBR161SEH	1/4"	8	8.31	7	11	24.5	-
QBR200SEH	1/4"	10	9.5	7.88	12.94	27.44	-
QBR245SEH	1/4"	12	10	10.5	15.19	30.5	-
QBR270SEH	1/4"	12	10.03	11.63	16.31	33.31	-
QBR300SEH	1/4"	16	11.56	12.63	16.38	26.76	37.14
QBR330SEH	1/4"	18	11.56	14	17.5	27.88	38.23
QBR365SEH	1/4"	20	12.06	15.69	19.56	29.94	40.32
8115SEH	1/4"	8	8.25	0	8	14.5	-
8118SEH	1/4"	14	9.75	8.5	9.38	17	-
8120SEH	1/4"	14	9.75	9.25	100.13	17	-
8122SEH	1/4"	14	9.75	10.06	10.94	17	-
8124SEH	1/4"	16	11.5	11	11.94	21	-
8127SEH	1/4"	18	11.5	12	12.94	21	-
8130SEH	1/4"	22	11.5	13.06	14	21	-
Model	**Screw Size**	**# of Screws**	**L**	**Q**	**R**	**S**	**U**
8133SEH	1/4"	28	21.5	14.34	4.25	24.81	14.19
8137SEH	1/4"	30	23.25	15.66	4.25	24.81	14.19

Dimensions are in inches unless otherwise noted.

STANDARD MODELS - FOUNDATION PLAN & FASTENERS FOR WOOD/STEEL

Model	Screw Size	# of Screws	CC	BC	BD	BE	BF
QBR100H	1/4"	8	5.06	4.25	4.69	14.44	-
QBR137H	1/4"	8	7.00	6.19	6.50	19.00	-
QBR161H	1/4"	8	8.31	7.00	8.00	21.50	-
QBR200H	1/4"	10	9.50	7.88	9.94	24.44	-
QBR245H	1/4"	12	10.00	10.50	12.19	27.50	-
QBR270H	1/4"	12	10.03	11.63	13.31	30.31	-
QBR300H	1/4"	16	11.56	12.63	13.38	23.76	37.14
QBR330H	1/4"	18	11.56	14.00	14.50	24.88	38.23
QBR365H	1/4"	20	12.06	15.69	16.56	26.94	40.32
3012H	1/4"	8	8.25	0.00	7.00	14.50	-
3013H	1/4"	8	8.25	0.00	7.56	14.50	-
3015H, 8115H	1/4"	8	8.25	0.00	8.00	14.50	-
3016H	1/4"	8	8.25	0.00	8.69	14.50	-
3018H, 8118H	1/4"	14	9.75	8.50	9.38	17.00	-
3020H, 8120H	1/4"	14	9.75	9.25	10.13	17.00	-
3022H, 8122H	1/4"	14	9.75	10.06	10.94	17.00	
3024H, 8124H	1/4"	16	11.50	11.00	11.94	21.00	-
3027H, 8127H	1/4"	18	11.50	12.00	12.94	21.00	
3030H, 8130H	1/4"	22	11.50	13.06	14.00	21.00	
Model	**Screw Size**	**# of Screws**	**L**	**Q**	**R**	**S**	**U**
3033H, 8133H	1/4"	28	21.50	14.34	4.25	24.81	14.19
3037H, 8137H	1/4"	30	23.25	15.66	4.25	24.81	14.19

Footprint should be referenced for the quantity of bolts required for mounting.

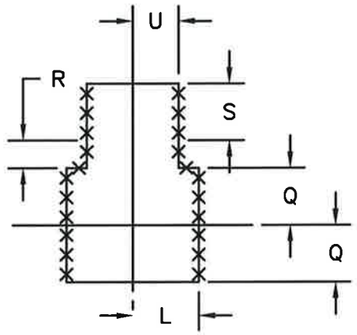

SIZES 3033–3037
SIZES 8133–8137

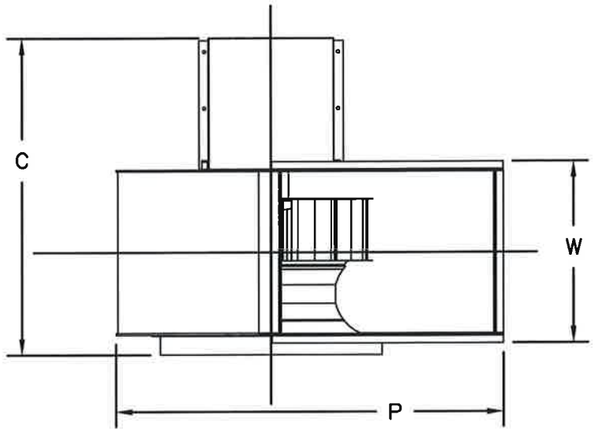

PLAN VIEW

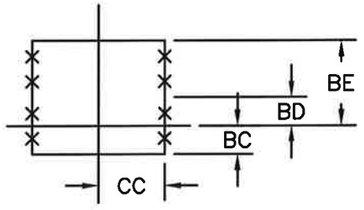

SIZES QBR 100–270
SIZES 3012–3016
SIZES 8115

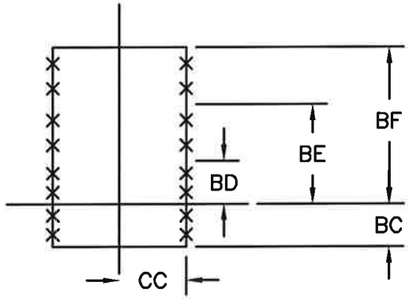

SIZES QBR 300–365
SIZES 3018–3030
SIZES 8118–8130

X = 5/16" HOLES FOR 1/4" SHEET METAL/WOOD SCREWS OR 1/4" LAG BOLTS EQUALLY SPACED.

STATE OF TEXAS
JOSEPH A. REED
100777
LICENSED
PROFESSIONAL ENGINEER
3/2/17

Joseph A. Reed, PE
TX PE 100777
Architectural Testing, Inc.
TX Firm F-11869
130 Derry Ct.
York, PA 17404
717-764-7700
Project No.: E8434.06-122-34

DWG NO. 646020 Sheet 4/9
TITLE QBR, 3000, 8100 ROOFTOP FANS
MAT'L
DRAFTER BPF DATE 5/20/11
DESIGN ENG. TCR 5/20/11 RELEASED
CHKD BY MFG. SCALE NTS

LET.	REVISION RECORD	BY	CKD.	DATE
A	Revisions per Miami–Dade	BPF	TCR	2/27/12
B	Revision to sheet 6 line 12 per Miami Dade.	TCR	TGB	1/24/13
C	Revisions to sheet 5 concerning isolators.	TCR	TGB	8/5/14
D	REVISED FOR FBC 2014	TCR	TGB	6/2/15
E	ADDED SHEET 9	TCR	TGB	12/4/15
F	Revisions to sheets 5 & 9 per Miami Dade.	TGB	TCR	5/19/16
G	Revisions to sheet 9 per Miami Dade.	TGB	TCR	8/23/16
H	WOOD SCREW PENETRATION AND CONCRETE STRENGTH	TGB	TCR	3/1/17

Acme Engineering & Manufacturing Corp.
1820 N. York Street
Muskogee, OK 74403
918-682-7791

Large Missile Impact Resistant
Max rated design pressure : +53.0 / −112.0 PSF

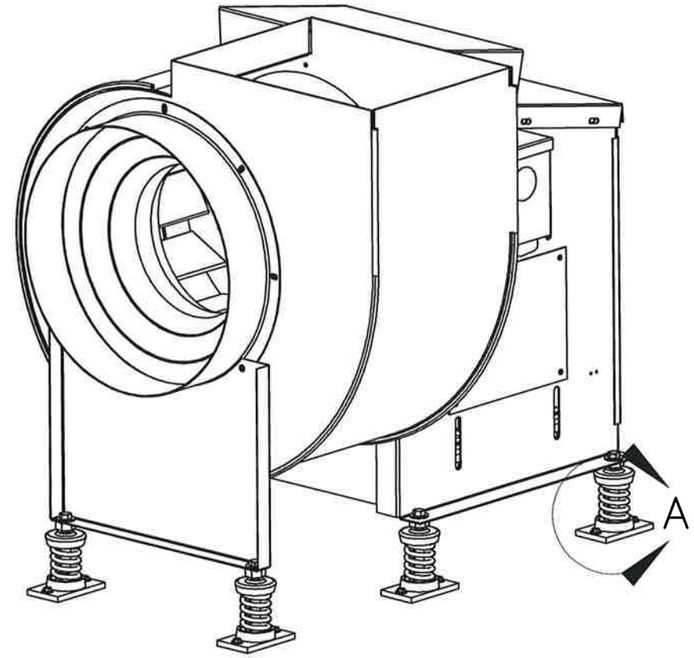

Mounting with Isolators to Roof

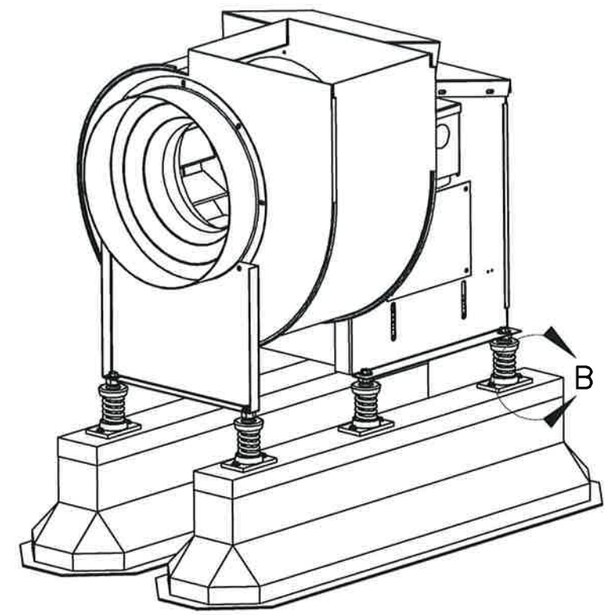

Mounting with Isolators on Rails

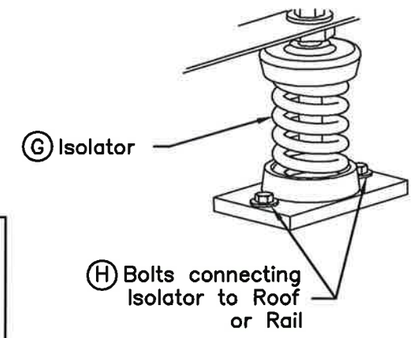

Detail A

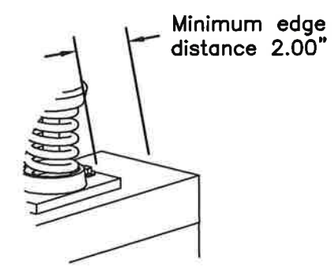

Detail B

STATE OF TEXAS
JOSEPH A. REED
100777
LICENSED
PROFESSIONAL ENGINEER
3/3/17

Joseph A. Reed, PE
TX PE 100777
Architectural Testing, Inc.
TX Firm F-11869
130 Derry Ct.
York, PA 17404
717-764-7700
Project No.: E8434.06-122-34

Isolators by others. This example shows spring isolators, neoprene isolators may also be used.

Reference pages 3, 4, and 5 for bolt sizes and quantities.

DWG NO.	646020 Sheet 5/9
TITLE	QBR, 3000, 8100 ROOFTOP FANS
MAT'L	
DRAFTER	BPF
DATE	5/20/11
DESIGN ENG.	TCR 5/20/11
RELEASED	
CHKD BY	
MFG.	
SCALE	NTS

LET.	REVISION RECORD	BY	CKD.	DATE
A	Revisions per Miami–Dade	BPF	TCR	2/27/12
B	Revision to sheet 6 line 12 per Miami Dade.	TCR	TGB	1/24/13
C	Revisions to sheet 5 concerning isolators.	TCR	TGB	8/5/14
D	REVISED FOR FBC 2014	TCR	TGB	6/2/15
E	ADDED SHEET 9	TCR	TGB	12/4/15
F	Revisions to sheets 5 & 9 per Miami Dade.	TGB	TCR	5/19/16
G	Revisions to sheet 9 per Miami Dade.	TGB	TCR	8/23/16
H	WOOD SCREW PENETRATION AND CONCRETE STRENGTH	TGB	TCR	3/1/17

Acme Engineering &
Manufacturing Corp.
1820 N. York Street
Muskogee, OK 74403
918-682-7791

Models	A -Inlet Connection	Qty	B -Drive-Side Plate	Qty	C -Pedestal Connection	Qty	D -Motor Base	Qty	F -Bearing Base	Qty	G -Weather Cover Top #1	Qty	H -Weather Cover Top #2*	Qty	J -Weather Cover Back	Qty	K -Access Door	Qty	L -Base Angles	Qty
QBRH 100	1/4" Bolts & Nuts	8	1/4" Bolts & Nuts	8	5/16" Bolts & Nuts	4	1/2" Bolts & Nuts	4	1/2" Bolts & Nuts	4	1/4" Bolts & Nuts	4	1/4" Screws	4	1/4" Bolts & Nuts	4	1/4" Bolts & Nuts	8	N/A	N/A
QBRH 137																				
QBRH 161	5/16" Bolts & Nuts		5/16" Bolts & Nuts		3/8" Bolts & Nuts	6						6				6				
QBRH 200																				
QBRH 245	3/8" Bolts & Nuts		3/8" Bolts & Nuts																	
QBRH 270																				
QBRH 300		16		16		8										8			3/8" Bolts & Nuts	8
QBRH 330																				
QBRH 365																				
QBRSEH 137	1/4" Bolts & Nuts	8	1/4" Bolts & Nuts	8	5/16" Bolts & Nuts	6						10				6			N/A	N/A
QBRSEH 161	5/16" Bolts & Nuts		5/16" Bolts & Nuts		3/8" Bolts & Nuts															
QBRSEH 200																				
QBRSEH 245	3/8" Bolts & Nuts		3/8" Bolts & Nuts																	
QBRSEH 270																				
QBRSEH 300		16		16		8										8			3/8" Bolts & Nuts	8
QBRSEH 330																				
QBRSEH 365																				

*Applicable to SE models only

Large Missile Impact Resistant
Max rated design pressure : +53.0 / −112.0 PSF

QBR SERIES – PARTS AND MATERIALS

#	PART DESCRIPTION	100	137	161	200	245	270	300	330	365
1	Pedestal Side	16 ga. crs	14 ga. crs	14 ga. crs	14 ga. crs	12 ga. hrpo	12 ga. hrpo	12 ga. hrpo	12 ga. hrpo	12 ga. hrpo
2	Drive Base	12 ga. crs	12 ga. crs	12 ga. hrpo	10 ga. hrpo	10 ga. hrpo	10 ga. hrpo	7 ga. hrpo	7 ga. hrpo	7 ga. hrpo
3	Mounting Plate	14 ga. crs	14 ga. crs	14 ga. crs	12 ga. hrpo	12 ga. hrpo	12 ga. hrpo	12 ga. hrpo	12 ga. hrpo	12 ga. hrpo
4	Access Door	20 ga. crs	20 ga. crs	20 ga. crs	20 ga. crs	18 ga. crs	18 ga. crs	18 ga. crs	18 ga. crs	18 ga. crs
5	Reinforcement Strip	12 ga. crs	12 ga. crs	12 ga. hrpo	12 ga. hrpo	12 ga. hrpo	12 ga. hrpo	12 ga. hrpo	12 ga. hrpo	12 ga. hrpo
6	Adapter Ring	16 ga. crs	16 ga. crs	16 ga. crs	14 ga. crs	14 ga. crs	14 ga. crs	14 ga. crs	14 ga. crs	14 ga. crs
7	Orifice	Alum 3003–0 .050	Alum 3003–14 .050	Alum 3003–0 .050	Alum 3003–0 .050	Alum 3003–0 .063	Alum 3003–0 .063	Alum 3003–0 .063	Alum 3003–0 .080	Alum 3003–14 .080
8	Weather Cover Top #1	20 ga. crs	18 ga. crs	18 ga. crs	18 ga. crs	16 ga. crs	16 ga. crs	16 ga. crs	16 ga. crs	16 ga. crs
9	Front Support	18 ga. crs	14 ga. crs	16 ga. crs	16 ga. crs	14 ga. crs	12 ga. hrpo	12 ga. hrpo	12 ga. hrpo	12 ga. hrpo
10	Weather Cover Back	20 ga. crs	18 ga. crs	18 ga. crs	18 ga. crs	16 ga. crs	14 ga. crs	16 ga. crs	16 ga. crs	16 ga. crs
11	Base Angle	–	–	–	–	–	–	12 ga. hrpo	12 ga. hrpo	12 ga. hrpo
12	Housing Scroll	12 ga. crs	12 ga. crs	12 ga. crs	14 ga. crs	14 ga. crs	14 ga. crs	14 ga. crs	14 ga. crs	14 ga. crs
13	Outlet Angle	16 ga. crs	16 ga. crs	16 ga. crs	14 ga. crs	14 ga. crs	14 ga. crs	10 ga. hrpo	10 ga. hrpo	10 ga. hrpo
14	Housing Side	14 ga. crs	14 ga. crs	12 ga. hrpo	12 ga. hrpo	12 ga. hrpo	12 ga. hrpo	12 ga. hrpo	12 ga. hrpo	12 ga. hrpo
15	Birdscreen*	19 ga. 1/2" x 1/2" Galvanized Wire	19 ga. 1/2" x 1/2" Galvanized Wire	19 ga. 1/2" x 1/2" Galvanized Wire	19 ga. 1/2" x 1/2" Galvanized Wire	19 ga. 1/2" x 1/2" Galvanized Wire	19 ga. 1/2" x 1/2" Galvanized Wire	19 ga. 1/2" x 1/2" Galvanized Wire	19 ga. 1/2" x 1/2" Galvanized Wire	19 ga. 1/2" x 1/2" Galvanized Wire
16	Weather Cover Top #2*	20 ga. crs	18 ga. crs	18 ga. crs	18 ga. crs	16 ga. crs	16 ga. crs	16 ga. crs	16 ga. crs	16 ga. crs
17	Wheel	Alum 3003–H14 .080	Alum 3003–H14 .050	Alum 3003–H14 .063	Alum 3003–H14 .063	Alum 3003–H14 .063	Alum 3003–H14 .063	Alum 3003–H14 .080	Alum 3003–H14 .080	Alum 3003–H14 .080

*Applicable to SE models only

1. "CRS" is an acronym for "cold rolled steel".
2. "HRPO" is an acronym for "hot rolled, pickled, and oiled".
3. Items 12, 13, and 14 make the housing weldment.
4. All pieces made of steel are painted using baked enamel.
5. In table above, line 17 gives material of backplate, the major structural component of wheel.

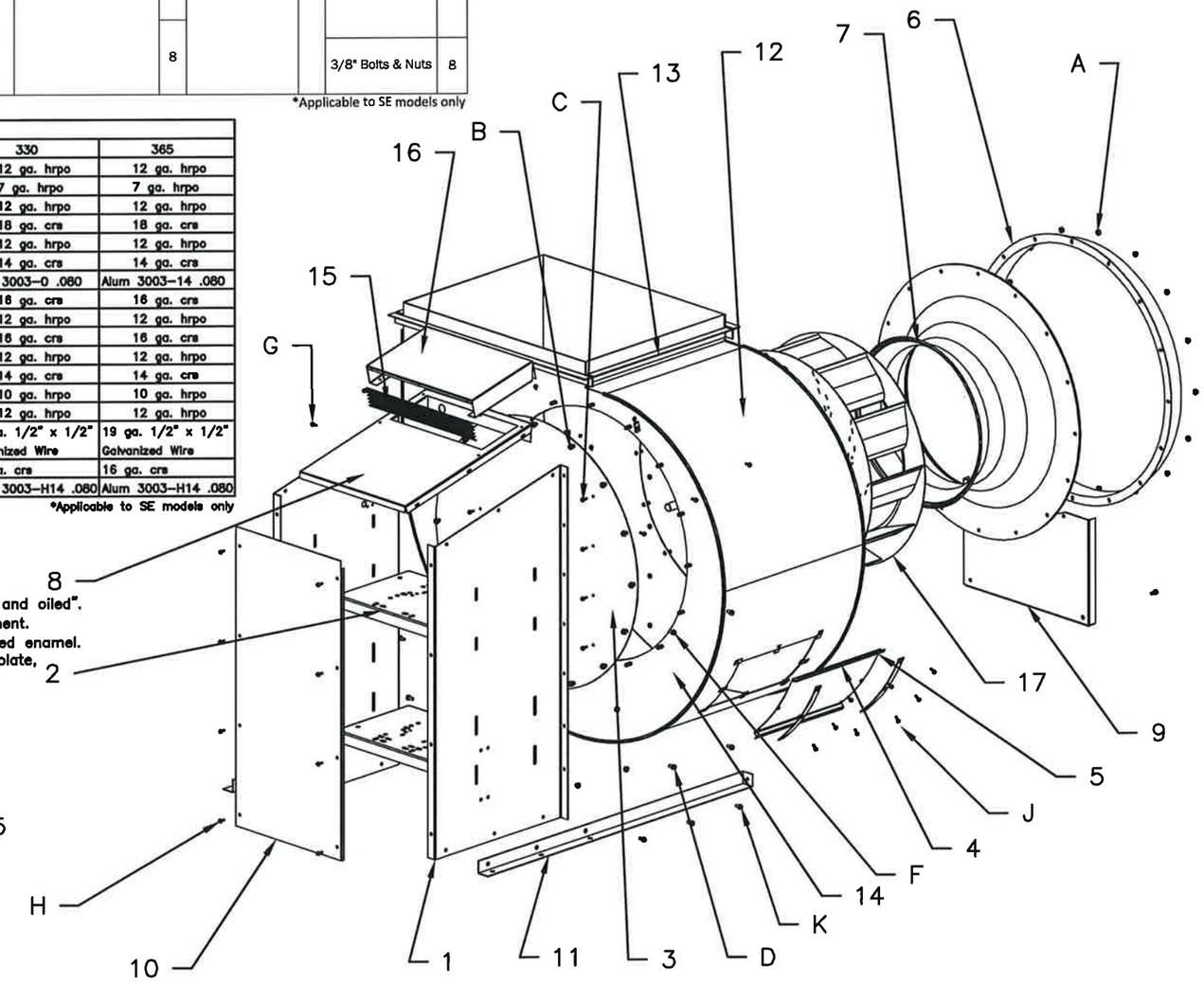

QBR SERIES
SIZES: 100–365

STATE OF TEXAS
JOSEPH A. REED
100777
LICENSED
PROFESSIONAL ENGINEER
3/3/17

Joseph A. Reed, PE
TX PE 100777
Architectural Testing, Inc.
TX Firm F-11869
130 Derry Ct.
York, PA 17404
717-764-7700
Project No.: E8434.06-122-34

DWG NO.	646020 Sheet 6/9
TITLE	QBR, 3000, 8100 ROOFTOP FANS
MAT'L	
DRAFTER	BPF
DATE	4/21/11
DESIGN ENG.	TCR 3/20/11
RELEASED	
CHKD BY	
MFG.	
SCALE	NTS

LET.	REVISION RECORD	BY	CKD.	DATE
A	Revisions per Miami–Dade	BPF	TCR	2/27/12
B	Revision to sheet 6 line 12 per Miami Dade.	TCR	TGB	1/24/13
C	Revisions to sheet 5 concerning isolators.	TCR	TGB	8/5/14
D	REVISED FOR FBC 2014	TCR	TGB	6/2/15
E	ADDED SHEET 9	TCR	TGB	12/4/15
F	Revisions to sheets 5 & 9 per Miami Dade.	TGB	TCR	5/19/16
G	Revisions to sheet 9 per Miami Dade.	TGB	TCR	8/23/16
H	WOOD SCREW PENETRATION AND CONCRETE STRENGTH	TGB	TCR	3/1/17

Acme Engineering &
Manufacturing Corp.
1820 N. York Street
Muskogee, OK 74403
918-682-7791

#	Component	3012	3013	3015	3016	3018	3020	3022	3024	3027	3030
		-	-	8115	-	8118	8120	8122	8124	8127	8130
1	Housing Center	16 ga crs	16 ga crs	16 ga crs	14 ga crs	14 ga crs	14 ga crs	14 ga crs	14 ga crs	14 ga crs	14 ga crs
2	Housing Side	14 ga crs	14 ga crs	14 ga crs	14 ga crs	14 ga crs	14 ga crs	14 ga crs	12 ga hrpo	12 ga hrpo	12 ga hrpo
3	Inlet	14 ga crs	14 ga crs	14 ga crs	14 ga crs	14 ga crs	14 ga crs	14 ga crs	14 ga crs	14 ga crs	14 ga crs
4	Inlet Flange Slip Fit	14 ga crs	14 ga crs	14 ga crs	14 ga crs	14 ga crs	12 ga hrpo	12 ga hrpo	12 ga hrpo	12 ga hrpo	12 ga hrpo
5	Inlet Support	12 ga hrpo	12 ga hrpo	12 ga hrpo	12 ga hrpo	12 ga hrpo	12 ga hrpo	12 ga hrpo	12 ga hrpo	12 ga hrpo	10 ga hrpo
6	Outlet Flanges	.19" x 2" x 2" angle	.19" x 2" x 2" angle	.19" x 2" x 2" angle	.19" x 2" x 2" angle	.19" x 2" x 2" angle	.19" x 2" x 2" angle	.19" x 2" x 2" angle	.19" x 2" x 2" angle	.19" x 2" x 2" angle	.19" x 2" x 2" angle
7	Drive Base Front	12 ga hrpo	12 ga hrpo	12 ga hrpo	12 ga hrpo	10 ga hrpo	10 ga hrpo	10 ga hrpo	7 ga hrpo	7 ga hrpo	7 ga hrpo
8	Drive Base Side	10 ga hrpo	10 ga hrpo	10 ga hrpo	10 ga hrpo	10 ga hrpo	10 ga hrpo	10 ga hrpo	7 ga hrpo	7 ga hrpo	7 ga hrpo
9	Weather Cover Top	16 ga crs	16 ga crs	16 ga crs	16 ga crs	16 ga crs	16 ga crs	16 ga crs	16 ga crs	16 ga crs	16 ga crs
10	Weather Cover Back	16 ga crs	16 ga crs	16 ga crs	16 ga crs	16 ga crs	16 ga crs	16 ga crs	16 ga crs	16 ga crs	16 ga crs
11	Weather Cover Door	16 ga crs	16 ga crs	16 ga crs	16 ga crs	16 ga crs	16 ga crs	16 ga crs	16 ga crs	16 ga crs	16 ga crs
12	Motor Base Plate	10 ga hrpo	10 ga hrpo	10 ga hrpo	10 ga hrpo	10 ga hrpo	10 ga hrpo	10 ga hrpo	7 ga hrpo	7 ga hrpo	7 ga hrpo
13	Bearing Base Plate	12 ga hrpo	12 ga hrpo	12 ga hrpo	12 ga hrpo	10 ga hrpo	10 ga hrpo	10 ga hrpo	7 ga hrpo	7 ga hrpo	7 ga hrpo
14	Access Door	14 ga crs	14 ga crs	14 ga crs	14 ga crs	14 ga crs	14 ga crs	14 ga crs	14 ga crs	14 ga crs	14 ga crs
15	**WHEEL**	**10 ga. hrpo**	**10 ga. hrpo**	**10 ga. hrpo**	**10 ga. hrpo**	**10 ga. hrpo**	**10 ga. hrpo**	**7 ga. hrpo**	**7 ga. hrpo**	**7 ga. hrpo**	**7 ga. hrpo**

Model / Size				A -Inlet connection	Qty	B -Pedestal Connection	Qty	C -Motor Plate	Qty	D- Weather Cover Top	Qty	F -Weather Cover Back	Qty	G - Motor Access Door	Qty	H - Housing Access Door	Qty
3012H	3012H	-	-	3/8" Bolts & Nuts	8	3/8" Bolts & Nuts	8	3/8" Bolts & Nuts	4	1/4" Screws	4	1/4" Screws	6	1/4" Screws	4	1/4" Bolts & Nuts	8
3013H	3013H	-	-														
3015H	3015H	8115SEH	8115SEH														
3016H	3016H	-	-														
3018H	3018H	8118SEH	8118SEH					1/2" Bolts & Nuts									
3020H	3020H	8120SEH	8120SEH		12		12										
3022H	3022H	8122SEH	8122SEH														
3024H	3024H	8124SEH	8124SEH														
3027H	3027H	8127SEH	8127SEH														
3030H	3030H	8130SEH	8130SEH														

Large Missile Impact Resistant
Max rated design pressure: +53.0/ −112.0 PSF

8100 & 3000 SERIES
SIZES: 3012−3030
SIZES: 8115−8130

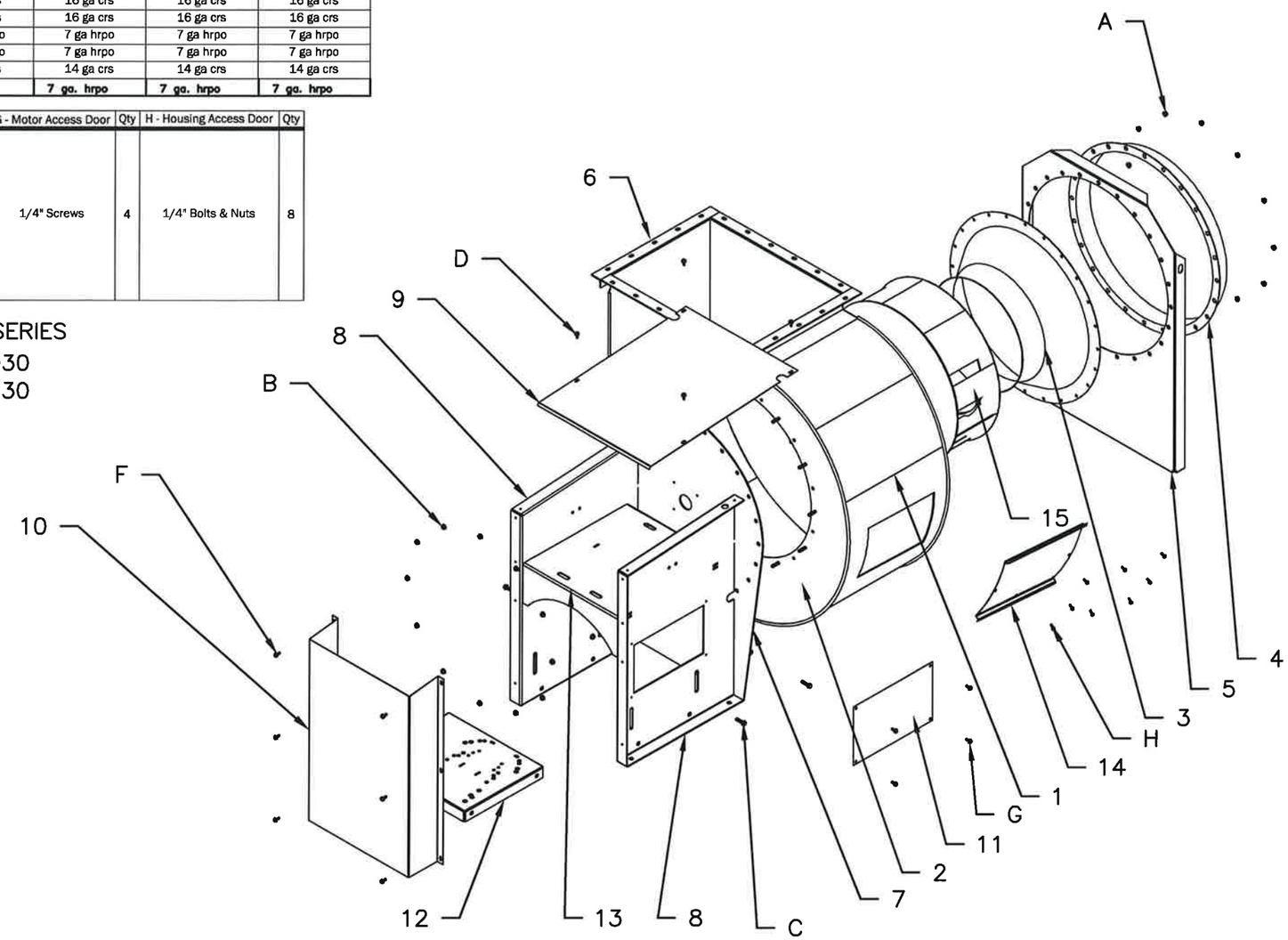

1. "CRS" is an acronym for "cold rolled steel".
2. "HRPO" is an acronym for "hot rolled, pickled, and oiled".
3. Item 7, 8(2) and 13 make the pedestal weldment.
4. Items 1, 2 and 6 make the housing weldment.
5. All pieces made of steel are painted using baked enamel.
6. In table above, line 15 gives material of backplate, the major structural component of wheel.

STATE OF TEXAS
JOSEPH A. REED
100777
LICENSED
PROFESSIONAL ENGINEER
3/2/17

Joseph A. Reed, PE
TX PE 100777
Architectural Testing, Inc.
TX Firm F-11869
130 Derry Ct.
York, PA 17404
717-764-7700
Project No.: E8434.06-122-34

DWG NO. 646020 Sheet 7/9

TITLE QBR, 3000, 8100 ROOFTOP FANS

MAT'L

DRAFTER BPF DATE 6/9/11

DESIGN ENG. TCR 6/9/11 RELEASED

CHKD BY MFG. SCALE NTS

LET.	REVISION RECORD	BY	CKD.	DATE
A	Revisions per Miami−Dade	BPF	TCR	2/27/12
B	Revision to sheet 6 line 12 per Miami Dade.	TCR	TGB	1/24/13
C	Revisions to sheet 5 concerning isolators.	TCR	TGB	8/5/14
D	REVISED FOR FBC 2014	TCR	TGB	6/2/15
E	ADDED SHEET 9	TCR	TGB	12/4/15
F	Revisions to sheets 5 & 9 per Miami Dade.	TGB	TCR	5/19/16
G	Revisions to sheet 9 per Miami Dade.	TGB	TCR	8/23/16
H	WOOD SCREW PENETRATION AND CONCRETE STRENGTH	TGB	TCR	3/1/17

Acme Engineering &
Manufacturing Corp.
1820 N. York Street
Muskogee, OK 74403
918-682-7791

Model/ Size				A -Inlet connection	Qty	B -Pedestal Connection	Qty	C -Drive Base	Qty	D -Motor Plate	Qty	F -Weather Cover Top	Qty	G -Weather Cover Back	Qty	H -Weather Cover Side	Qty	J -Access Door	Qty	K - Drive Base Angle	Qty	L -Housing Base Angle	Qty	M- Connecting Strip	Qty
3033H	3033SEH	8133H	8133SEH	3/8" Bolts & Nuts	12	3/8" Bolts & Nuts	12	1/2" Bolts & Nuts	10	1/2" Bolts & Nuts	4	1/4" Screws	6	1/4" Screws	6	1/4" Screws	22	1/4" Bolts & Nuts	8	3/8" Bolts & Nuts	8	3/8" Bolts & Nuts	2	3/8" Bolts & Nuts	8
3037H	3037SEH	8137H	8137SEH																						

3000 & 8100 SERIES - PARTS AND MATERIALS

#	Component	Model	
		3033, 8133	3037, 8137
1	Housing Center	14 ga crs	14 ga crs
2	Housing Side	12 ga hrpo	12 ga hrpo
3	Inlet	12 ga hrpo	12 ga hrpo
4	Inlet Flange Slip Fit	12 ga hrpo	12 ga hrpo
5	Inlet Support	10 ga hrpo	10 ga hrpo
6	Outlet Flanges	.19" x 2" x 2" angle	.19" x 2" x 2" angle
7	Drive Base Base Front	7 ga hrpo	7 ga hrpo
8	Drive Base Base Rear	7 ga hrpo	7 ga hrpo
9	Drive Base Angle	.25" x 3" x 3" angle	.25" x 3" x 3" angle
10	Weather Cover Top	16 ga crs	16 ga crs
11	Weather Cover Rear	16 ga crs	16 ga crs
12	Weather Cover Side	16 ga crs	16 ga crs
13	Connecting Strip	12 ga hrpo	12 ga hrpo
14	Housing Base Angle	.25" x 3" x 3" angle	.25" x 3" x 3" angle
15	Motor Base Plate	7 ga hrpo	7 ga hrpo
16	Bearing Base Plate	7 ga hrpo	7 ga hrpo
17	Drive Side Support Assembly	10 ga hrpo	10 ga hrpo
18	Access Door	14 ga crs	14 ga crs
19	**WHEEL**	**7 ga. hrpo**	**7 ga. hrpo**

Large Missile Impact Resistant
Max rated design pressure : +53.0 / −112.0 PSF

1. "CRS" is an acronym for "cold rolled steel".
2. "HRPO" is an acronym for "hot rolled, pickled, and oiled" steel.
3. Items 1, 2, and 6 make the housing weldment.
4. Item 17 (drive side support assembly) is a weldment.
5. All pieces made of steel are painted using baked enamel.
6. In table above, line 19 gives material of backplate, the major structural component of wheel.

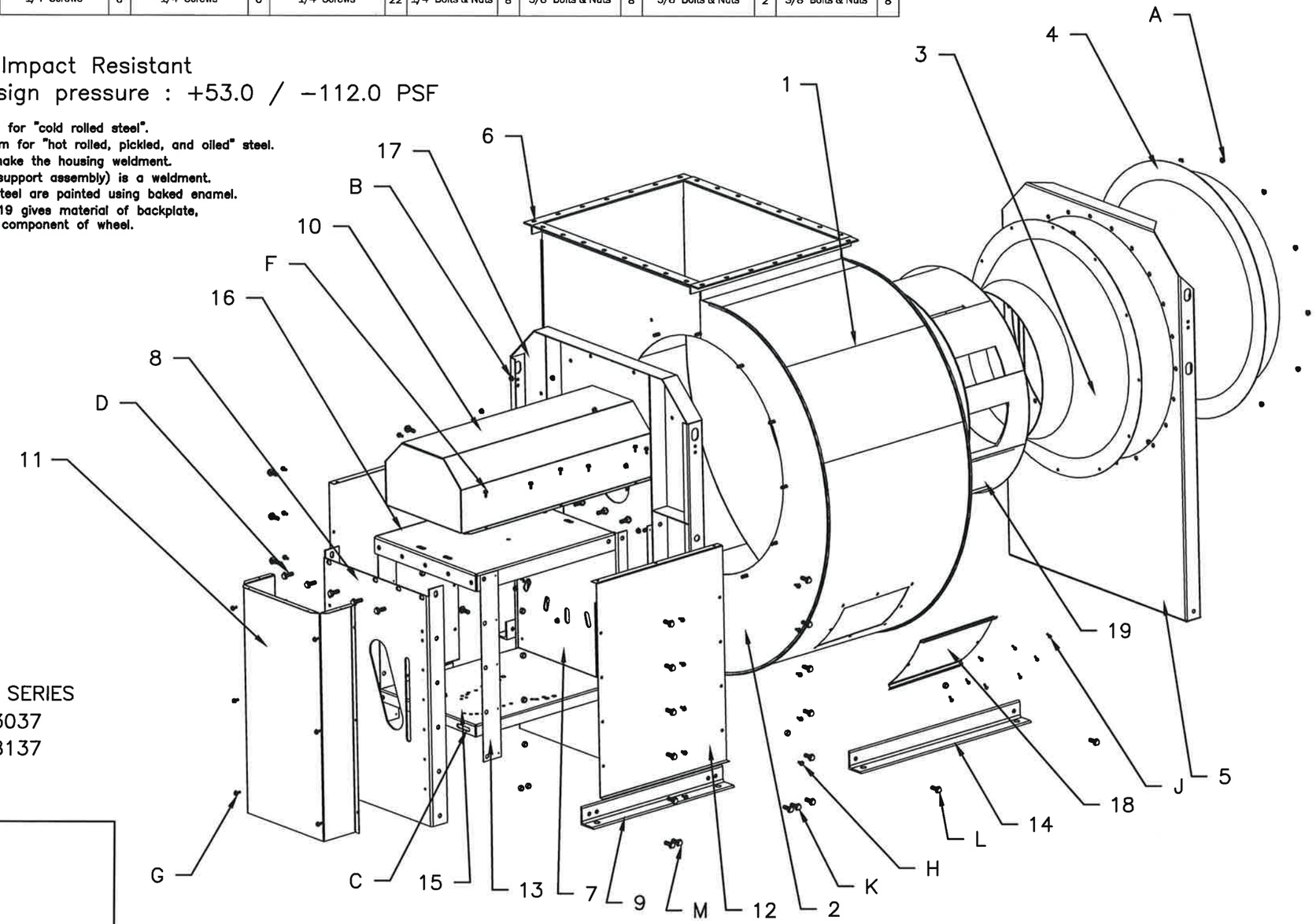

8100 & 3000 SERIES
SIZES: 3033–3037
SIZES: 8133–8137

STATE OF TEXAS
JOSEPH A. REED
100777
LICENSED
PROFESSIONAL ENGINEER
3/2/17

Joseph A. Reed, PE
TX PE 100777
Architectural Testing, Inc.
TX Firm F-11869
130 Derry Ct.
York, PA 17404
717-764-7700

Project No.: E8434.06-122-34

DWG NO.	646020 Sheet 8/9
TITLE	QBR, 3000, 8100 ROOFTOP FANS
MAT'L	
DRAFTER	BPS
DATE	5/19/11
DESIGN ENG.	TCR 5/19/11
RELEASED	
CHKD BY	
MFG.	
SCALE	NTS

LET.	REVISION RECORD	BY	CKD.	DATE
A	Revisions per Miami–Dade	BPF	TCR	2/27/12
B	Revision to sheet 6 line 12 per Miami Dade.	TCR	TGB	1/24/13
C	Revisions to sheet 5 concerning isolators.	TCR	TGB	8/5/14
D	REVISED FOR FBC 2014	TCR	TGB	6/2/15
E	ADDED SHEET 9	TCR	TGB	12/4/15
E	Revisions to sheets 5 & 9 per Miami Dade.	TGB	TCR	5/19/16
G	Revisions to sheet 9 per Miami Dade.	TGB	TCR	8/23/16
H	WOOD SCREW PENETRATION AND CONCRETE STRENGTH	TGB	TCR	3/1/17

Acme Engineering &
Manufacturing Corp.
1820 N. York Street
Muskogee, OK 74403
918-682-7791

Large Missile Impact Resistant
Max rated design pressure : +53.0 / −112.0 PSF

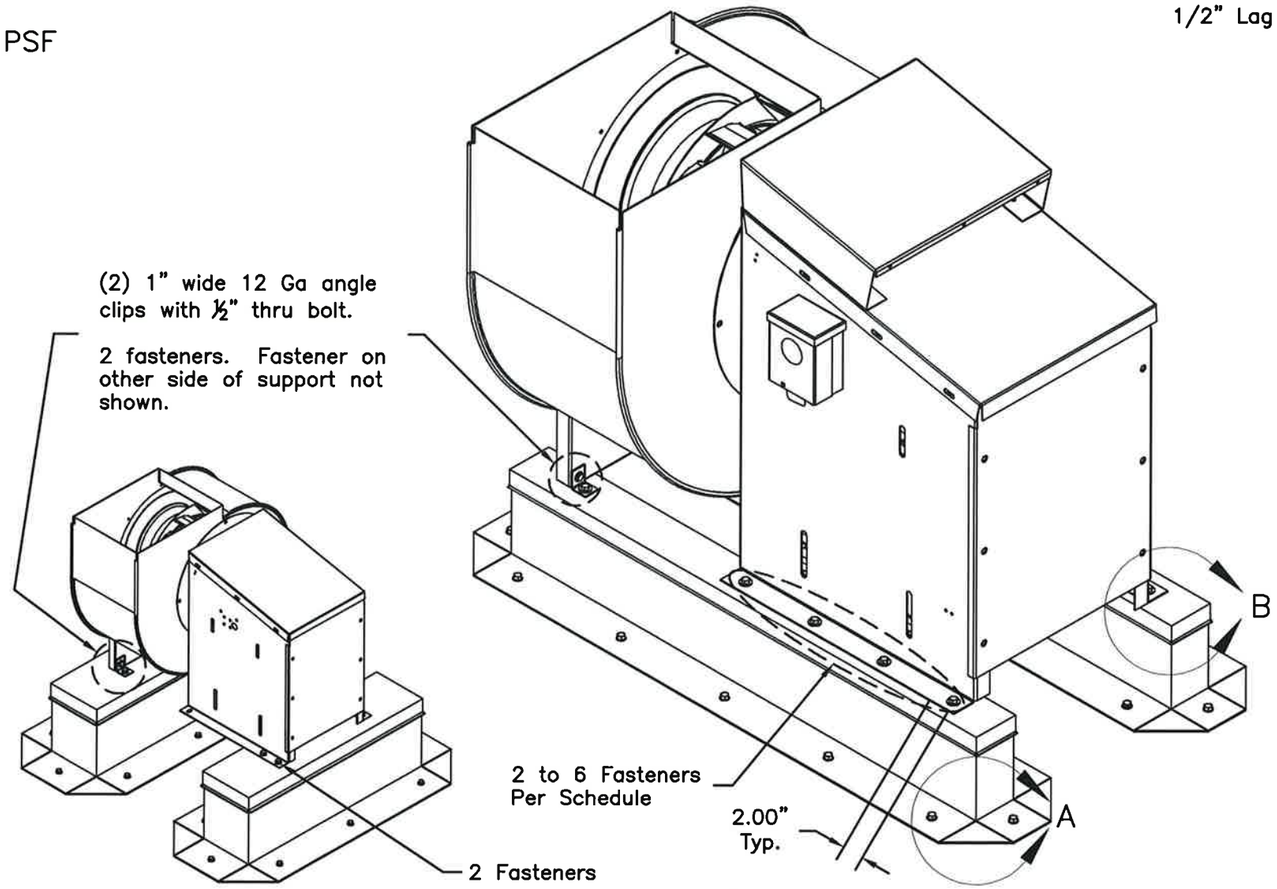

Rails in Lateral Orientation for QBR100 Only

Rails in Axial Orientation

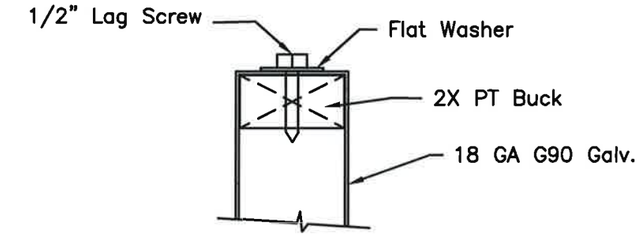

Section Through Rail

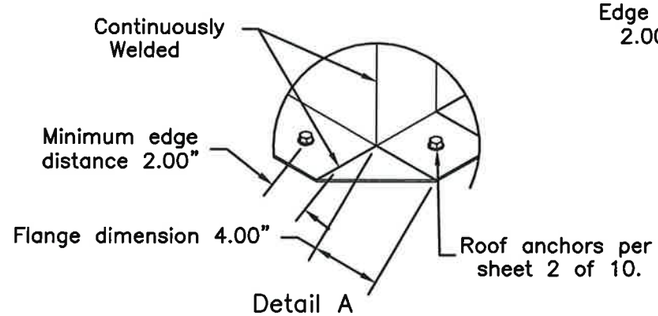

Detail A

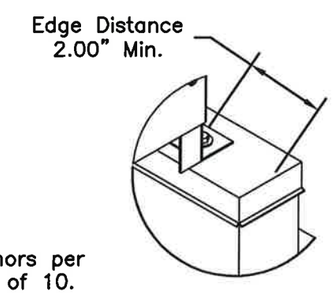

Detail B

Fastener Schedule

QBR

Model Size	# Rails	Min. Rail Length (in)	Rail Orientation	# Lag Bolts per Rail
100	2	22	Lateral	8
137	2	42	Axial	8
161	2	45	Axial	8
200	2	49	Axial	8
245	2	53	Axial	12
270	2	57	Axial	12
300	2	62	Axial	12
330	2	64	Axial	16
365	2	70	Axial	16

3000/8100

Model Size	# Rails	Min. Rail Length (in)	Rail Orientation	# Lag Bolts per Rail
12	2	28	Axial	8
13	2	30	Axial	8
15	2	28	Axial	8
16	2	30	Axial	8
18	2	33	Axial	8
20	2	33	Axial	8
22	2	35	Axial	8
24	2	38	Axial	8
27	2	38	Axial	12
30	2	35	Axial	12
33	2	71	Axial	16
37	2	74	Axial	16

Rails must provide a minimum clearance above surfaces according to F.B.C 1509.6.5

Maximum Curb Height of 48"

STATE OF TEXAS
JOSEPH A. REED
100777
LICENSED
PROFESSIONAL ENGINEER
3/1/17

Joseph A. Reed, PE
TX PE 100777
Architectural Testing, Inc.
TX Firm F-11869
130 Derry Ct.
York, PA 17404
717-764-7700

Project No.: E8434.06-122-34

DWG NO. 646020 Sheet 9/9

TITLE QBR, 3000, 8100 ROOFTOP FANS

MAT'L

DRAFTER BPF | DATE 5/20/11

DESIGN ENG. TCR 5/20/11 | RELEASED

CHKD BY | MFG. | SCALE NTS

LET.	REVISION RECORD	BY	CKD.	DATE
A	Revisions per Miami–Dade	BPF	TCR	2/27/12
B	Revision to sheet 6 line 12 per Miami Dade.	TCR	TGB	1/24/13
C	Revisions to sheet 5 concerning isolators.	TCR	TGB	8/5/14
D	REVISED FOR FBC 2014	TCR	TGB	6/2/15
E	ADDED EQUIPMENT RAILS ON SHEET 9	TCR	TGB	12/4/15
F	Revisions to sheets 5 & 9 per Miami Dade.	TGB	TCR	5/19/16
G	Revisions to sheet 9 per Miami Dade.	TGB	TCR	8/23/16
H	WOOD SCREW PENETRATION AND CONCRETE STRENGTH	TGB	TCR	3/1/17

Acme Engineering & Manufacturing Corp.
1820 N. York Street
Muskogee, OK 74403
918-682-7791