Alside BECAUSE LIFE IS FOR LIVING®

3773 STATE ROAD, CUYAHOGA FALLS, OH 44223

3100 STRUCTURAL TRANSOM MULLION

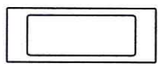

MULLION

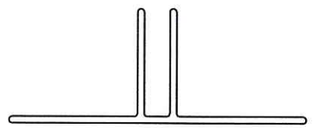

GOAL POST STYLE BRACKET

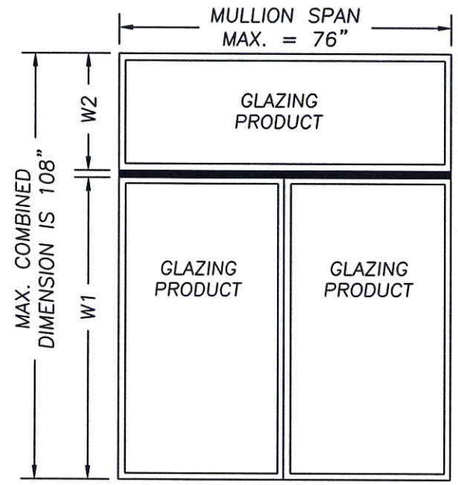

TRANSOM MULLED OVER TWINS

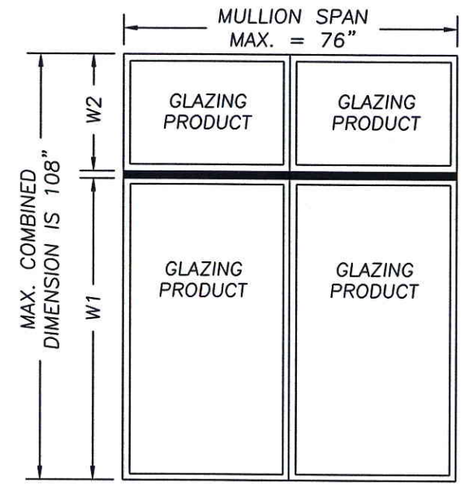

TWIN TRANSOMS MULLED OVER TWINS

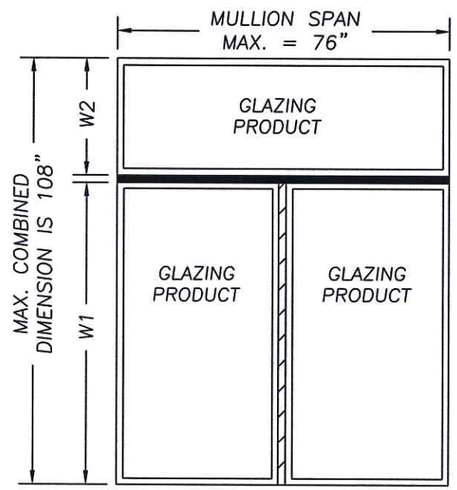

TRANSOM MULLED OVER MULLED SINGLES

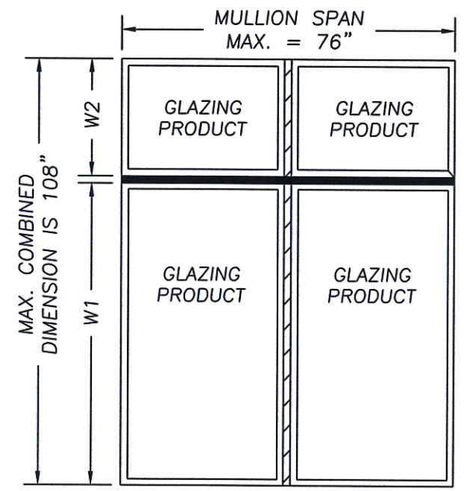

MULLED TRANSOM SINGLES MULLED OVER MULLED SINGLES

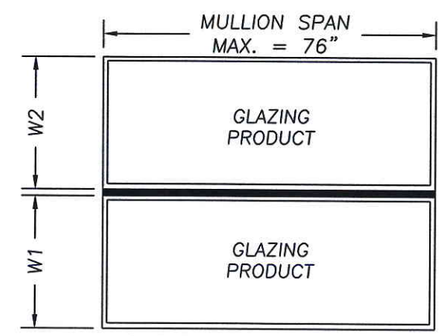

SINGLE MULLED OVER SINGLE

TYPICAL MULLION CONFIGURATIONS

NOTICE:
VERTICAL MULLIONS DEPICTED HERE ARE COVERED UNDER SEPARATE APPROVAL

GENERAL NOTES:

THE ALUMINUM STRUCTURAL MULLIONS DESCRIBED HEREIN COMPLY WITH THE 2006 INTERNATIONAL RESIDENTIAL CODE (IRC) SUBJECT TO THE FOLLOWING CONDITIONS:

1. MULLION ANCHOR EMBEDMENT TO BASE MATERIAL SHALL BE BEYOND WALL DRESSING OR STUCCO.
2. SEPARATE PRODUCT APPROVALS FOR EACH ALSIDE GLAZING PRODUCT USED WITH THESE MULLIONS MUST BE SUBMITTED ALONG WITH THIS MULLION PRODUCT APPROVAL.
3. ANY CONDITIONS NOT COVERED IN THIS EVALUATION ARE SUBJECT TO SEPARATE ENGINEERING EVALUATION.
4. APPROVED ALSIDE TWIN UNITS OR APPROVED ALSIDE SINGLES CAN BE USED IN MULLION CONFIGURATIONS. THE VERTICAL AND HORIZONTAL MULLION CONFIGURATIONS CAN BE COMBINED TO MULL MULTIPLE SINGLE UNITS TOGETHER.
5. THE DESIGN PRESSURE RATING OF THE ASSEMBLY SHALL BE THE LESSER OF THE LOAD CAPACITY OF THE MULLION AS DETERMINED USING THIS APPROVAL OR THE DESIGN PRESSURE RATING OF THE INDIVIDUAL GLAZING PRODUCTS USED.
6. BOUNDING BOX DIMENSIONS FOR GEOMETRIC TRANSOM SHAPES MUST BE EQUAL TO OR LESS THAN THE RECTANGULAR TRANSOM DIMENSIONS SHOWN HEREIN.

SUPPORTING DOCUMENTS & EVIDENCE

1. THIS PRODUCT HAS BEEN ENGINEERED FOLLOWING ACCEPTED ENGINEERING PRACTICE CONFORMING TO THE REQUIREMENTS IN SECTION 613.9 OF THE IRC.

TABLE OF CONTENTS

SHEET #	DESCRIPTION
1	TYPICAL ELEVATIONS & GENERAL NOTES
2	MULLION LOAD TABLE FOR WOOD SCREW ANCHORS
3	MULLION LOAD TABLE FOR CONCRETE SCREW ANCHORS
4	MULLION SECTION & ANCHOR DETAILS

Documents Prepared By: Lyndon F. Schmidt, P.E.
TEXAS P.E. #104123

RW BUILDING CONSULTANTS, INC.
P.O. Box 230 Valrico FL. 33595
Phone No.: 813.659.9197

TEXAS BOARD OF PROFESSIONAL ENGINEERS
CERTIFICATE OF REGISTRATION # F-11852

PRODUCT: STRUCTURAL TRANSOM

PART OR ASSEMBLY: TYPICAL ELEVATION AND GENERAL NOTES

NO.	DATE	BY

REVISIONS

DATE: 8/08/13
SCALE: NTS
DWG. BY: JK
CHK. BY: LFS
DRAWING NO.: TX-4357
SHEET 1 OF 4

© 2013 R.W. BUILDING CONSULTANTS INC.

R:\A - Projects\Project Folders\Proj 1301-1400\PF 1309\TEXAS - TD\TDL-3100 Structural Mullion\TDL 2013 RENEWAL\TX-4357.dwg, TX-4357

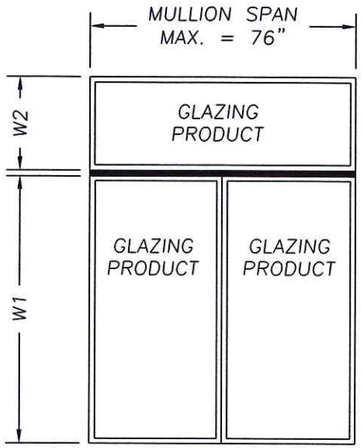

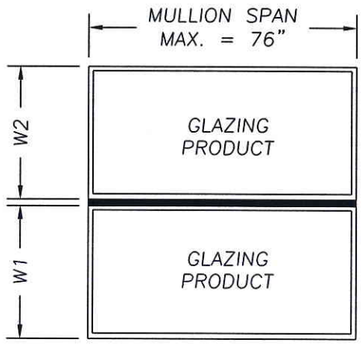

$$\text{TRIBUTARY WIDTH} = \frac{W1 + W2}{2}$$

3100 SERIES STRUCTRUAL TRANSOM MULLION LOAD TABLE (PSF)

WOOD SCREW ANCHORS	TRIBUTARY WIDTH												
MULLION SPAN	28"	30"	32"	34"	36"	38"	40"	42"	44"	46"	48"	50"	54"
76"	58.29	54.40	51.00	48.00	45.33	42.95	40.80	38.86	37.09	35.48	34.00	32.64	30.22
72"	68.55	63.98	59.98	56.45	53.32	50.51	47.99	45.70	43.62	41.73	39.99	38.39	35.55
70"	74.60	69.62	65.27	61.43	58.02	54.97	52.22	49.73	47.47	45.41	43.52	41.77	38.68
68"	81.37	75.95	71.20	67.01	63.29	59.96	56.96	54.25	51.78	49.53	47.47	45.57	42.19
66"	89.00	83.07	77.87	73.29	69.22	65.58	62.30	59.33	56.64	54.17	51.92	49.84	46.15
64"	97.61	91.10	85.41	80.38	75.92	71.92	68.32	65.07	62.11	59.41	56.94	54.66	50.61
62"	107.36	100.20	93.94	88.41	83.50	79.11	75.15	71.57	68.32	65.35	62.63	60.12	55.67
60"	118.46	110.56	103.65	97.55	92.13	87.28	82.92	78.97	75.38	72.10	69.10	66.34	61.42
58"	120.00	120.00	114.75	108.00	102.00	96.63	91.80	87.43	83.45	79.82	76.50	73.44	68.00
56"	120.00	120.00	119.57	112.54	106.29	100.69	95.66	91.10	86.96	83.18	79.71	76.53	70.86
54"	120.00	120.00	120.00	116.71	110.22	104.42	99.20	94.48	90.18	86.26	82.67	79.36	73.48
52"	120.00	120.00	120.00	120.00	114.46	108.44	103.02	98.11	93.65	89.58	85.85	82.41	76.31
50"	120.00	120.00	120.00	120.00	119.04	112.77	107.14	102.03	97.40	93.16	89.28	85.71	79.36
48"	120.00	120.00	120.00	120.00	120.00	117.47	111.60	106.29	101.45	97.04	93.00	89.28	82.67
46"	120.00	120.00	120.00	120.00	120.00	120.00	116.45	110.91	105.87	101.26	97.04	93.16	86.26
44"	120.00	120.00	120.00	120.00	120.00	120.00	120.00	115.95	110.68	105.87	101.45	97.40	90.18
42"	120.00	120.00	120.00	120.00	120.00	120.00	120.00	120.00	115.95	110.91	106.29	102.03	94.48
40"	120.00	120.00	120.00	120.00	120.00	120.00	120.00	120.00	120.00	116.45	111.60	107.14	99.20
38"	120.00	120.00	120.00	120.00	120.00	120.00	120.00	120.00	120.00	120.00	117.47	112.77	104.42
36"	120.00	120.00	120.00	120.00	120.00	120.00	120.00	120.00	120.00	120.00	120.00	119.04	110.22
34"	120.00	120.00	120.00	120.00	120.00	120.00	120.00	120.00	120.00	120.00	120.00	120.00	116.71
32"	120.00	120.00	120.00	120.00	120.00	120.00	120.00	120.00	120.00	120.00	120.00	120.00	120.00
30"	120.00	120.00	120.00	120.00	120.00	120.00	120.00	120.00	120.00	120.00	120.00	120.00	120.00
28"	120.00	120.00	120.00	120.00	120.00	120.00	120.00	120.00	120.00	120.00	120.00	120.00	120.00
26"	120.00	120.00	120.00	120.00	120.00	120.00	120.00	120.00	120.00	120.00	120.00	120.00	120.00
24"	120.00	120.00	120.00	120.00	120.00	120.00	120.00	120.00	120.00	120.00	120.00	120.00	120.00

INSTRUCTIONS FOR USE OF THE MULLION LOAD TABLE:

1. DETERMINE THE DESIGN LOAD REQUIREMENT FOR THE PARTICULAR OPENING AS SPECIFIED BY THE BUILDING DESIGNER (ARCHITECT OR ENGINEER OR RECORD).
2. FOR THE PARTICULAR OPENING, DETERMINE THE TRIBUTARY WIDTH AND MULLION SPAN. REFERENCE THE SKETCHES ON THIS SHEET FOR MULLION SPAN AND TRIBUTARY WIDTH DETERMINATION.
3. IN THE FIRST COLUMN OF THE TABLE, LOCATE THE MULLION SPAN. IN THE FIRST ROW OF THE TABLE, LOCATE THE TRIBUTARY WIDTH. AT THE INTERSECTION OF THE ROW CONTAINING THE MULLION SPAN AND THE COLUMN CONTAINING THE TRIBUTARY WIDTH, READ THE MULLION LOAD RATING GIVEN IN PSF. THE MULLION LOAD RATING MUST BE EQUAL TO OR GREATER THAN THE DESIGN LOAD REQUIREMENT DETERMINED IN STEP 1 ABOVE.

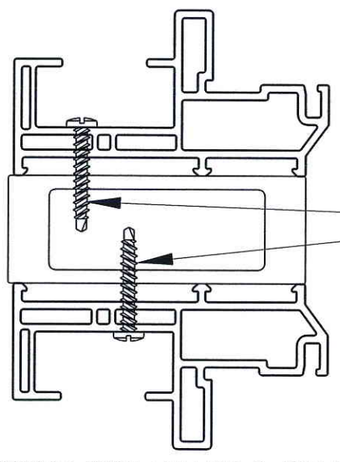

SECTION THRU MULLION & FRAME

FOR ANCHORING GLAZING PRODUCTS TO THE MULLION, ANCHOR SIZE AND SPACING SHALL BE AS SPECIFIED IN ONE OF THE FOLLOWING:

1. SUBSTITUTE (1 FOR 1) 1/4"-14 SELF-DRILLING SCREWS FOR THE FASTENERS SHOWN IN THE INDIVIDUAL GLAZING PRODUCT APPROVAL.

2. SUBSTITUTE #8-18 PANHEAD SELF-DRILLING SCREWS FOR THE FASTENERS SHOWN IN THE INDIVIDUAL GLAZING PRODUCT APPROVAL. MAXIMUM FASTENER SPACING ALLOWED IS 6" FROM EACH END AND AT 15" O.C. MAX. SPACING.

NOTE: A MINIMUM OF 3 THREADS OF THE SELF-DRILLING SCREWS MUST PROTRUDE THROUGH THE WALL OF THE MULLION. THIS SECTION VIEW IS SHOWN FOR ILLUSTRATIVE PURPOSES; OTHER FRAME SECTIONS OF TDI APPROVED WINDOWS BY ALSIDE WINDOWS CAN BE USED IN THIS FASHION.

8.12.13

Documents Prepared By: Lyndon F. Schmidt, P.E.
TEXAS P.E. #104123

RW BUILDING CONSULTANTS, INC.
P.O. Box 230 Valrico FL. 33595
Phone No.: 813.659.9197

TEXAS BOARD OF PROFESSIONAL ENGINEERS
CERTIFICATE OF REGISTRATION # F-11852

PRODUCT: STRUCTURAL TRANSOM

PART OR ASSEMBLY: MULLION LOAD TABLE FOR CONCRETE SCREW ANCHORS

NO.	DATE	REVISIONS	BY

DATE: 8/08/13
SCALE: NTS
DWG. BY: JK
CHK. BY: LFS
DRAWING NO.: TX-4357
SHEET 2 OF 4

© 2013 R.W. BUILDING CONSULTANTS INC.

R:\A - Projects\Project Folders\Proj 1301-1400\PF 1309\TEXAS - TDI\TDI-3100 Structural Mullion\TDL 2013 RENEWAL\TX-4357.dwg, 2

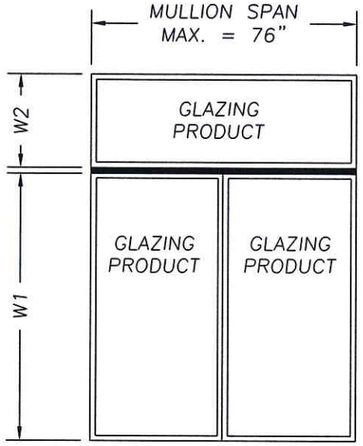

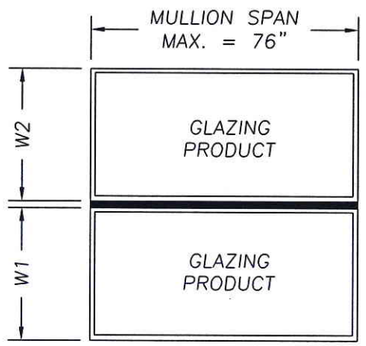

$$\text{TRIBUTARY WIDTH} = \frac{W1 + W2}{2}$$

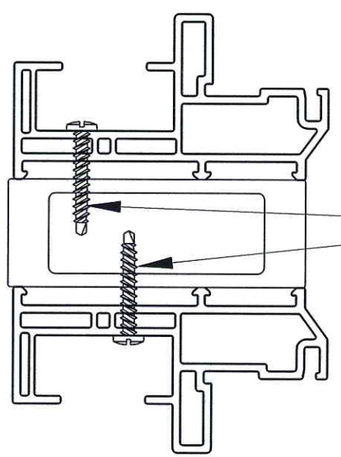

SECTION THRU MULLION & FRAME

3100 SERIES STRUCTRUAL TRANSOM MULLION LOAD TABLE (PSF)

CONCRETE SCREW ANCHORS	TRIBUTARY WIDTH												
MULLION SPAN	28"	30"	32"	34"	36"	38"	40"	42"	44"	46"	48"	50"	54"
76"	54.14	50.53	47.37	44.58	42.11	39.89	37.89	36.09	34.45	32.95	31.58	30.32	28.07
72"	57.14	53.33	50.00	47.06	44.44	42.11	40.00	38.10	36.36	34.78	33.33	32.00	29.63
70"	58.78	54.86	51.43	48.40	45.71	43.31	41.14	39.18	37.40	35.78	34.29	32.91	30.48
68"	60.50	56.47	52.94	49.83	47.06	44.58	42.35	40.34	38.50	36.83	35.29	33.88	31.37
66"	62.34	58.18	54.55	51.34	48.48	45.93	43.64	41.56	39.67	37.94	36.36	34.91	32.32
64"	64.29	60.00	56.25	52.94	50.00	47.37	45.00	42.86	40.91	39.13	37.50	36.00	33.33
62"	66.36	61.94	58.06	54.65	51.61	48.90	46.45	44.24	42.23	40.39	38.71	37.16	34.41
60"	68.57	64.00	60.00	56.47	53.33	50.53	48.00	45.71	43.64	41.74	40.00	38.40	35.56
58"	70.94	66.21	62.07	58.42	55.17	52.27	49.66	47.29	45.14	43.18	41.38	39.72	36.78
56"	73.47	68.57	64.29	60.50	57.14	54.14	51.43	48.98	46.75	44.72	42.86	41.14	38.10
54"	76.19	71.11	66.67	62.75	59.26	56.14	53.33	50.79	48.48	46.38	44.44	42.67	39.51
52"	79.12	73.85	69.23	65.16	61.54	58.30	55.38	52.75	50.35	48.16	46.15	44.31	41.03
50"	82.29	76.80	72.00	67.76	64.00	60.63	57.60	54.86	52.36	50.09	48.00	46.08	42.67
48"	85.71	80.00	75.00	70.59	66.67	63.16	60.00	57.14	54.55	52.17	50.00	48.00	44.44
46"	89.44	83.48	78.26	73.66	69.57	65.90	62.61	59.63	56.92	54.44	52.17	50.09	46.38
44"	93.51	87.27	81.82	77.01	72.73	68.90	65.45	62.34	59.50	56.92	54.55	52.36	48.48
42"	97.96	91.43	85.71	80.67	76.19	72.18	68.57	65.31	62.34	59.63	57.14	54.86	50.79
40"	102.86	96.00	90.00	84.71	80.00	75.79	72.00	68.57	65.45	62.61	60.00	57.60	53.33
38"	108.27	101.05	94.74	89.16	84.21	79.78	75.79	72.18	68.90	65.90	63.16	60.63	56.14
36"	114.29	106.67	100.00	94.12	88.89	84.21	80.00	76.19	72.73	69.57	66.67	64.00	59.26
34"	120.00	112.94	105.88	99.65	94.12	89.16	84.71	80.67	77.01	73.66	70.59	67.76	62.75
32"	120.00	120.00	112.50	105.88	100.00	94.74	90.00	85.71	81.82	78.26	75.00	72.00	66.67
30"	120.00	120.00	120.00	112.94	106.67	101.05	96.00	91.43	87.27	83.48	80.00	76.80	71.11
28"	120.00	120.00	120.00	120.00	114.29	108.27	102.86	97.96	93.51	89.44	85.71	82.29	76.19
26"	120.00	120.00	120.00	120.00	120.00	116.60	110.77	105.49	100.70	96.32	92.31	88.62	82.05
24"	120.00	120.00	120.00	120.00	120.00	120.00	120.00	114.29	109.09	104.35	100.00	96.00	88.89

INSTRUCTIONS FOR USE OF THE MULLION LOAD TABLE:

1. DETERMINE THE DESIGN LOAD REQUIREMENT FOR THE PARTICULAR OPENING AS SPECIFIED BY THE BUILDING DESIGNER (ARCHITECT OR ENGINEER OR RECORD).
2. FOR THE PARTICULAR OPENING, DETERMINE THE TRIBUTARY WIDTH AND MULLION SPAN. REFERENCE THE SKETCHES ON THIS SHEET FOR MULLION SPAN AND TRIBUTARY WIDTH DETERMINATION.
3. IN THE FIRST COLUMN OF THE TABLE, LOCATE THE MULLION SPAN. IN THE FIRST ROW OF THE TABLE, LOCATE THE TRIBUTARY WIDTH. AT THE INTERSECTION OF THE ROW CONTAINING THE MULLION SPAN AND THE COLUMN CONTAINING THE TRIBUTARY WIDTH, READ THE MULLION LOAD RATING GIVEN IN PSF. THE MULLION LOAD RATING MUST BE EQUAL TO OR GREATER THAN THE DESIGN LOAD REQUIREMENT DETERMINED IN STEP 1 ABOVE.

FOR ANCHORING GLAZING PRODUCTS TO THE MULLION, ANCHOR SIZE AND SPACING SHALL BE AS SPECIFIED IN ONE OF THE FOLLOWING:

1. SUBSTITUTE (1 FOR 1) 1/4"-14 SELF-DRILLING SCREWS FOR THE FASTENERS SHOWN IN THE INDIVIDUAL GLAZING PRODUCT APPROVAL.

2. SUBSTITUTE #8-18 PANHEAD SELF-DRILLING SCREWS FOR THE FASTENERS SHOWN IN THE INDIVIDUAL GLAZING PRODUCT APPROVAL. MAXIMUM FASTENER SPACING ALLOWED IS 6" FROM EACH END AND AT 15" O.C. MAX. SPACING.

NOTE: A MINIMUM OF 3 THREADS OF THE SELF-DRILLING SCREWS MUST PROTRUDE THROUGH THE WALL OF THE MULLION. THIS SECTION VIEW IS SHOWN FOR ILLUSTRATIVE PURPOSES; OTHER FRAME SECTIONS OF TDI APPROVED WINDOWS BY ALSIDE WINDOWS CAN BE USED IN THIS FASHION.

STATE OF TEXAS
LYNDON F. SCHMIDT
104123
LICENSED PROFESSIONAL ENGINEER
8.12.13

Documents Prepared By: Lyndon F. Schmidt, P.E.
TEXAS P.E. #104123
RW BUILDING CONSULTANTS, INC.
P.O. Box 230 Valrico FL. 33595
Phone No.: 813.659.9197
TEXAS BOARD OF PROFESSIONAL ENGINEERS
CERTIFICATE OF REGISTRATION # F-11852

PRODUCT: STRUCTURAL TRANSOM

PART OR ASSEMBLY: MULLION LOAD TABLE FOR USING CONCRETE SCREW ANCHORS

NO.	DATE	REVISIONS	BY

DATE: 8/08/13
SCALE: NTS
DWG. BY: JK
CHK. BY: LFS
DRAWING NO.: TX-4357
SHEET 3 OF 4

© 2013 R.W. BUILDING CONSULTANTS INC.

R:\A - Projects\Project Folders\Proj 1301-1400\PF 1309\TEXAS - TD\TDI-3100 Structural Mullion\TDL 2013 RENEWAL\TX-4357.dwg, 3

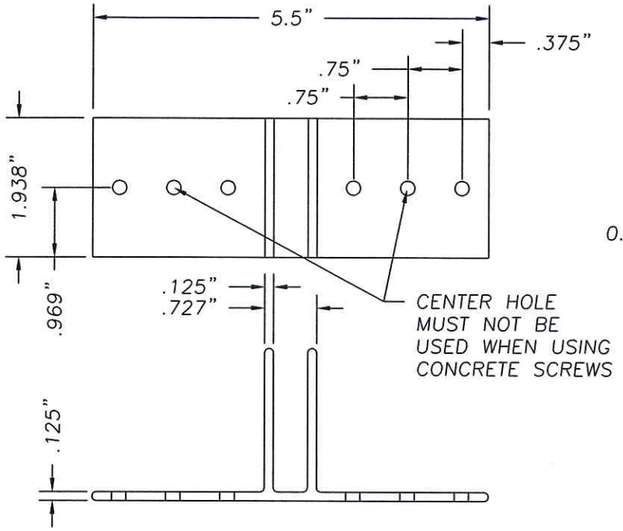

MULLION ANCHOR BRACKET 50-2722
MAT'L: 6063-T6

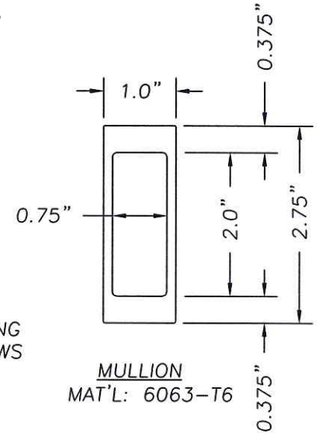

MULLION
MAT'L: 6063-T6

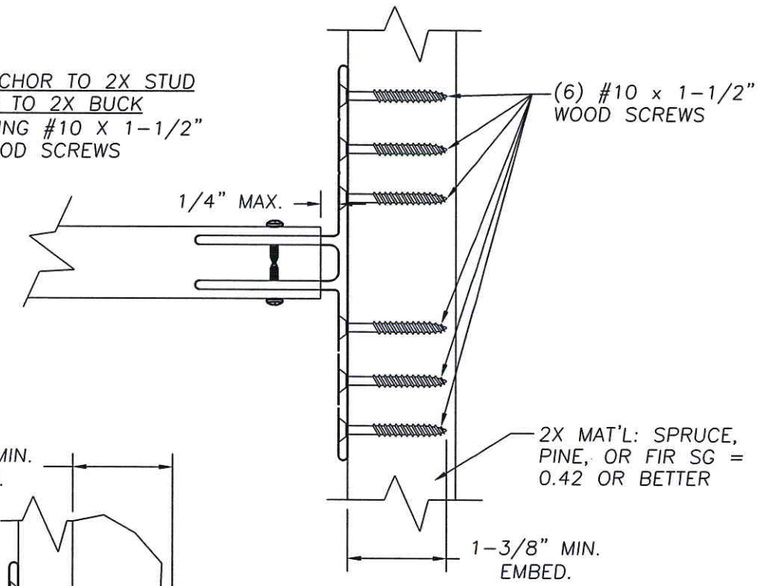

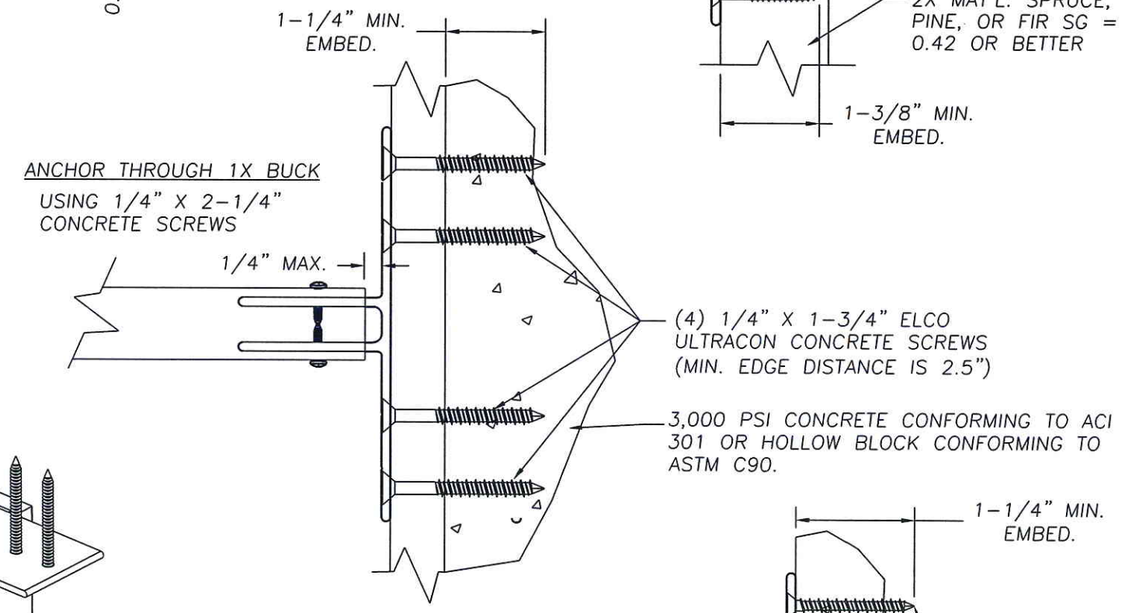

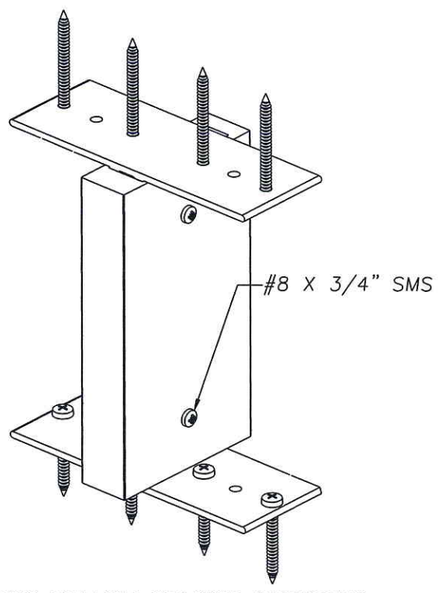

BASIC MULLION BRACKET ANCHORING
FOR CONCRETE SCREW CONNECTIONS

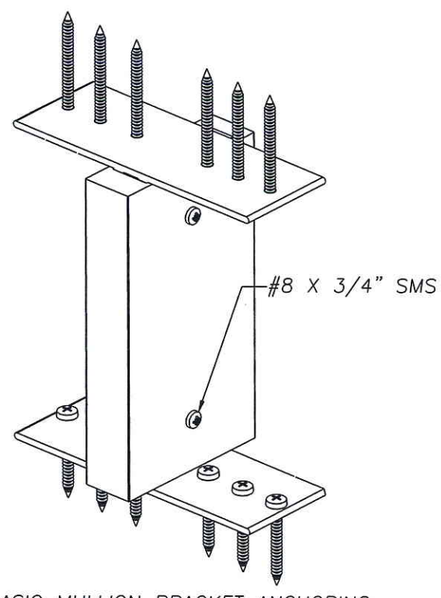

BASIC MULLION BRACKET ANCHORING
FOR WOOD SCREW CONNECTIONS

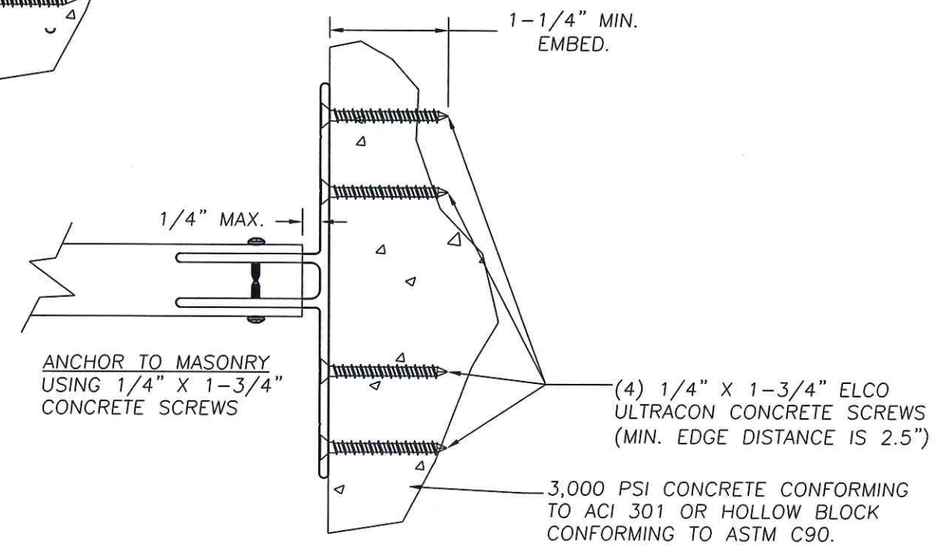

STATE OF TEXAS
LYNDON F. SCHMIDT
104123
LICENSED PROFESSIONAL ENGINEER

Documents Prepared By: Lyndon F. Schmidt, P.E.
TEXAS P.E. #104123

R.W. BUILDING CONSULTANTS, INC.
P.O. Box 230 Valrico FL. 33595
Phone No.: 813.659.9197

TEXAS BOARD OF PROFESSIONAL ENGINEERS
CERTIFICATE OF REGISTRATION # F-11852

PRODUCT: STRUCTURAL TRANSOM

PART OR ASSEMBLY: MULLION SECTION & ANCHOR DETAILS

NO.	DATE	REVISIONS	BY

DATE: 8/08/13
SCALE: NTS
DWG. BY: JK
CHK. BY: LFS
DRAWING NO.: TX-4357
SHEET 4 OF 4

© 2013 R.W. BUILDING CONSULTANTS INC.

R:\A - Projects\Project Folders\Proj 1301-1400\PF 1309\TEXAS - TD\TDI-3100 Structural Mullion\TDL 2013 RENEWAL\TX-4357.dwg, 4