REVISIONS			
REV	DESCRIPTION	DATE	APPROVED
A	ADDED COMPONENT DETAILS	10/02/14	R.L.

NOTES:

1. THE PRODUCT SHOWN HEREIN IS DESIGNED AND MANUFACTURED TO COMPLY WITH REQUIREMENTS OF THE 2006 IBC AND THE 2006 IRC WITH STATE OF TEXAS MODIFICATIONS AND WITH THE 2009 IBC, 2009 IRC, 2012 IBC, 2012 IRC, 2015 IBC AND 2015 IRC.
2. WOOD FRAMING TO BE DESIGNED AND ANCHORED TO PROPERLY TRANSFER ALL LOADS TO STRUCTURE. FRAMING IS THE RESPONSIBILITY OF THE ARCHITECT OR ENGINEER OF RECORD.
3. 1X BUCK OVER MASONRY/CONCRETE IS OPTIONAL. WHERE 1X BUCK IS NOT USED DISSIMILAR MATERIALS MUST BE SEPARATED WITH APPROVED COATING OR MEMBRANE. SELECTION OF COATING OR MEMBRANE IS THE RESPONSIBILITY OF THE ARCHITECT OR ENGINEER OF RECORD.
4. ALLOWABLE STRESS INCREASE OF 1/3 WAS NOT USED IN THE DESIGN OF THE PRODUCT SHOWN HEREIN. WIND LOAD DURATION FACTOR Cd=1.6 WAS USED FOR WOOD ANCHOR CALCULATIONS.
5. APPROVED IMPACT PROTECTIVE SYSTEM IS NOT REQUIRED FOR THIS PRODUCT IN WIND BORNE DEBRIS REGIONS UP TO WIND ZONE 3.
6. DESIGN PRESSURE AND INSTALLATION DETAILS SHOWN IN THIS DOCUMENT APPLY ONLY TO MULLION. WINDOWS MUST BE APPROVED UNDER SEPARATE APPROVAL.
7. SINGLE WINDOWS TO BE MULLED ARE NOT LIMITED TO THOSE SHOWN IN THIS DRAWING. WINDOWS MUST BE MANUFACTURED BY WINDOW MART.
8. DESIGN PRESSURE OF MULLED UNIT SHALL BE CONTROLLED BY THE LESSER DESIGN PRESSURE OF THE MULLION OR THE INDIVIDUAL WINDOW OR DOOR UNIT.
9. UNITS MAY BE MULLED TOGETHER INDEFINITELY AS LONG AS SINGLE UNIT WIDTH AND HEIGHT ARE NOT EXCEEDED AND MULLION IS ANCHORED AS SHOWN HEREIN.

ANCHORING NOTES:

1. FOR ANCHORING INTO WOOD FRAMING OR 2X BUCK USE #10 WOOD SCREW WITH SUFFICIENT LENGTH TO ACHIEVE A 1 3/8" MINIMUM EMBEDMENT. LOCATE ANCHORS AS SHOWN IN INSTALLATION DETAILS SHEET 3.
2. FOR ANCHORING INTO CONCRETE USE 3/16" TAPCON WITH SUFFICIENT LENGTH TO ACHIEVE A 1 3/4" MINIMUM EMBEDMENT WITH 2 1/2" MINIMUM EDGE DISTANCE. LOCATE ANCHORS AS SHOWN IN INSTALLATION DETAILS SHEET 4.
3. FOR ANCHORING INTO METAL STRUCTURE USE #10 SMS OR SELF DRILLING SCREWS WITH SUFFICIENT LENGTH TO ACHIEVE 3 THREADS MINIMUM BEYOND STRUCTURE INTERIOR WALL. LOCATE ANCHORS AS SHOWN IN ELEVATIONS AND INSTALLATION DETAILS.
4. FOR ATTACHING REINFORCEMENTS TO WINDOW FRAME USE #6 SELF DRILLING SCREWS WITH SUFFICIENT LENGTH TO ACHIEVE A MINIMUM EMBEDMENT OF THREE THREADS PAST THE MULLION WALL. LOCATE SCREWS IN ACCORDANCE WITH WINDOW ANCHORING SCHEDULE AS SHOWN IN WINDOW SEPARATE APPROVAL.
5. FOR WINDOW UNITS ANCHORING SCHEDULE REFER TO APPROVED INSTALLATION INSTRUCTIONS.
6. ALL FASTENERS TO BE CORROSION RESISTANT.
7. INSTALLATION ANCHORS SHALL BE INSTALLED IN ACCORDANCE WITH ANCHOR MANUFACTURER'S INSTALLATION INSTRUCTIONS, AND ANCHORS SHALL NOT BE USED IN SUBSTRATES WITH STRENGTHS LESS THAN THE MINIMUM STRENGTH SPECIFIED BELOW:
   A. WOOD – MINIMUM SPECIFIC GRAVITY OF G=0.42
   B. CONCRETE – MINIMUM COMPRESSIVE STRENGTH OF 3,200 PSI.
   C. MASONRY – STRENGTH CONFORMANCE TO ASTM C–90, GRADE N, TYPE 1 (OR GREATER).
   D. METAL STRUCTURE: STEEL 18GA, 33KSI OR ALUMINUM 6063–T5 1/8" THICK MINIMUM

SIGNED: 08/01/2019

TABLE OF CONTENTS

SHEET NO.	DESCRIPTION
1	NOTES
2	RATING CHARTS
3 – 6	INSTALLATION DETAILS & ANCHOR CHARTS
7	COMPONENTS

WINDOW MART
5760 ALBERT PIKE
ROYAL, AR 71968

VX MULLION – IMPACT
(2) 1/4" X 3/4" ALUMINUM REINFORCEMENTS
NOTES

DRAWN:	DWG NO.	REV
V.L.	08–02233	A

SCALE	DATE	SHEET
NTS	10/02/13	1 OF 7

L. ROBERTO LOMAS P.E.
1432 WOODFORD RD LEWISVILLE, NC 27023
434-688-0609 rllomas@lrlomaspe.com

STATE OF TEXAS
LUIS R. LOMAS
101889
LICENSED
PROFESSIONAL ENGINEER

Luis R. Lomas P.E.
TX No.: 101889

REVISIONS			
REV	DESCRIPTION	DATE	APPROVED
A	ADDED COMPONENT DETAILS	10/02/14	R.L.

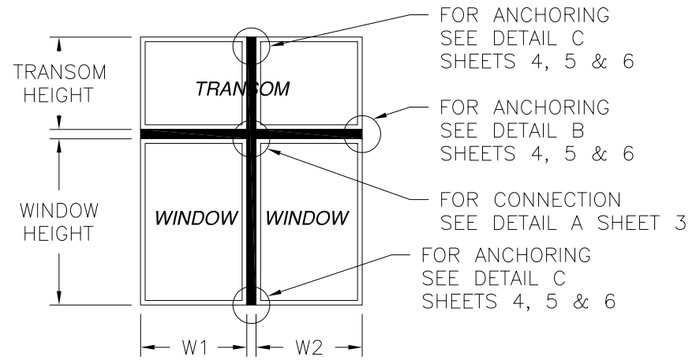

SEE CHARTS 1-12 FOR DESIGN PRESSURE RATINGS AND NUMBER OF ANCHORS REQUIRED

CHART #1
18" TRANSOM
SEE CHARTS 2 & 3 FOR NUMBER OF ANCHORS REQUIRED

Design pressure chart (psf)									
Mullion span (in)	Tributary Height (in)	Tributary Height (in)	Tributary width (in)						
			24.00	30.00	36.00	42.00	48.00	54.00	60.00
54.00	36.00	18.00	98.9	82.3	71.5	63.6	57.3	52.1	47.8
60.00	42.00	18.00	70.0	58.2	50.5	45.2	41.1	37.7	34.8
66.00	48.00	18.00	51.1	42.5	36.8	32.9	30.0	27.8	25.8
72.00	54.00	18.00	38.4	31.8	27.5	24.6	22.4	20.8	19.5
78.00	60.00	18.00	29.5	24.4	21.1	18.8	17.1	15.8	-
84.00	66.00	18.00	23.1	19.1	16.5	-	-	-	-
90.00	72.00	18.00	18.4	15.2	-	-	-	-	-

CHART #7
30" TRANSOM
SEE CHARTS 8 & 9 FOR NUMBER OF ANCHORS REQUIRED

Design pressure chart (psf)									
Mullion span (in)	Tributary Height (in)	Tributary Height (in)	Tributary width (in)						
			24.00	30.00	36.00	42.00	48.00	54.00	60.00
72.00	42.00	30.00	41.2	33.8	28.9	25.4	22.7	20.5	18.7
76.00	46.00	30.00	34.7	28.4	24.3	21.3	19.1	17.3	15.9
80.00	50.00	30.00	29.4	24.1	20.6	18.1	16.2	-	-
84.00	54.00	30.00	25.1	20.6	17.6	15.4	-	-	-
88.00	58.00	30.00	21.6	17.7	15.1	-	-	-	-
92.00	62.00	30.00	18.7	15.3	-	-	-	-	-
96.00	66.00	30.00	16.3	-	-	-	-	-	-

CHART #4
24" TRANSOM
SEE CHARTS 5 & 6 FOR NUMBER OF ANCHORS REQUIRED

Design pressure chart (psf)									
Mullion span (in)	Tributary Height (in)	Tributary Height (in)	Tributary width (in)						
			24.00	30.00	36.00	42.00	48.00	54.00	60.00
60.00	36.00	24.00	72.4	59.8	51.4	45.2	40.4	36.5	33.3
66.00	42.00	24.00	53.2	43.9	37.7	33.3	30.0	27.2	25.0
72.00	48.00	24.00	40.1	33.0	28.4	25.1	22.6	20.7	19.1
78.00	54.00	24.00	30.9	25.4	21.8	19.3	17.4	16.0	-
84.00	60.00	24.00	24.2	19.9	17.1	15.1	-	-	-
90.00	66.00	24.00	19.3	15.9	-	-	-	-	-
96.00	72.00	24.00	15.6	-	-	-	-	-	-

CHART #10
36" TRANSOM
SEE CHARTS 11 & 12 FOR NUMBER OF ANCHORS REQUIRED

Design pressure chart (psf)									
Mullion span (in)	Tributary Height (in)	Tributary Height (in)	Tributary width (in)						
			24.00	30.00	36.00	42.00	48.00	54.00	60.00
72.00	36.00	36.00	41.5	34.0	29.1	25.5	22.7	20.5	18.6
76.00	40.00	36.00	35.1	28.8	24.5	21.5	19.2	17.3	15.8
80.00	44.00	36.00	29.9	24.5	20.9	18.3	16.3	-	-
84.00	48.00	36.00	25.6	21.0	17.9	15.6	-	-	-
88.00	52.00	36.00	22.1	18.1	15.4	-	-	-	-
92.00	56.00	36.00	19.2	15.7	-	-	-	-	-
96.00	60.00	36.00	16.8	-	-	-	-	-	-

SIGNED: 08/01/2019

DESIGN PRESSURE TABLE INSTRUCTIONS:

1. DEFINE REQUIRED DESIGN LOAD PER CHAPTER 16 OF THE 2006 IBC OR SECTION R301.2.1 OF THE 2006 IRC.
2. DETERMINE MULLION SPAN AND TRIBUTARY WIDTH OF PRODUCT TO BE INSTALLED BASED ON FORMULA FOR TRIBUTARY WIDTH BELOW.
3. TO DETERMINE MULLION RATING LOCATE COLUMN FOR MULLION SPAN AND TRIBUTARY WIDTH THEN LOCATE CORRESPONDING ROW FOR BOTTOM AND TRANSOM HEIGHTS. FIND THE INTERSECTION OF THIS COLUMN AND ROW. MULLION RATING IS LOCATED AT THIS INTERSECTION.
4. MULLION RATING MUST BE EQUAL OR GREATER THAN REQUIRED DESIGN PRESSURE OBTAINED IN STEP 1.
5. IF TRANSOM TO BE INSTALLED IS NOT LISTED IN THESE CHARTS GO TO NEXT HIGHER TRANSOM CHART. FOR EXAMPLE IF TRANSOM TO BE INSTALLED IS 20" HIGH THEN USE CHART FOR 24" TRANSOM.
6. WINDOW/DOOR AND TRANSOMS TO BE ANCHORED ON ALL FOUR SIDES.

$$\text{TRIBUTARY WIDTH} = \frac{W1 + W2}{2}$$

WINDOW MART
5760 ALBERT PIKE
ROYAL, AR 71968

VX MULLION – IMPACT
(2) 1/4" X 3/4" ALUMINUM REINFORCEMENTS
CONFIGURATION AND DESIGN PRESSURE CHARTS

DRAWN:	DWG NO.	REV
V.L.	08-02233	A

SCALE	DATE	SHEET
NTS	10/02/13	2 OF 7

L. ROBERTO LOMAS P.E.
1432 WOODFORD RD LEWISVILLE, NC 27023
434-688-0609 rllomas@lrlomaspe.com

Luis R. Lomas P.E.
TX No.: 101889

REVISIONS			
REV	DESCRIPTION	DATE	APPROVED
A	ADDED COMPONENT DETAILS	10/02/14	R.L.

CHART #3
18" TRANSOM

Number of anchors required at vertical mullion end									
Mullion span (in)	Tributary Height (in)	Tributary Height (in)	Tributary width (in)						
			24.00	30.00	36.00	42.00	48.00	54.00	60.00
54.00	36.00	18.00	6	6	6	6	6	6	6
60.00	42.00	18.00	4	4	4	4	4	4	4
66.00	48.00	18.00	4	4	4	4	4	4	4
72.00	54.00	18.00	4	4	4	4	4	4	4
78.00	60.00	18.00	2	2	2	2	4	4	-
84.00	66.00	18.00	2	2	2	-	-	-	-
90.00	72.00	18.00	2	2	-	-	-	-	-

CHART #6
24" TRANSOM

Number of anchors required at vertical mullion end									
Mullion span (in)	Tributary Height (in)	Tributary Height (in)	Tributary width (in)						
			24.00	30.00	36.00	42.00	48.00	54.00	60.00
60.00	36.00	24.00	4	4	4	4	4	4	4
66.00	42.00	24.00	4	4	4	4	4	4	4
72.00	48.00	24.00	4	4	4	4	4	4	4
78.00	54.00	24.00	4	4	4	2	2	2	-
84.00	60.00	24.00	2	2	2	2	-	-	-
90.00	66.00	24.00	2	2	-	-	-	-	-
96.00	72.00	24.00	2	-	-	-	-	-	-

CHART #9
30" TRANSOM

Number of anchors required at vertical mullion end									
Mullion span (in)	Tributary Height (in)	Tributary Height (in)	Tributary width (in)						
			24.00	30.00	36.00	42.00	48.00	54.00	60.00
72.00	42.00	30.00	4	4	4	4	4	4	4
76.00	46.00	30.00	4	4	4	4	4	4	4
80.00	50.00	30.00	4	2	2	2	2	-	-
84.00	54.00	30.00	2	2	2	2	-	-	-
88.00	58.00	30.00	2	2	2	-	-	-	-
92.00	62.00	30.00	2	2	-	-	-	-	-
96.00	66.00	30.00	2	-	-	-	-	-	-

CHART #12
36" TRANSOM

Number of anchors required at vertical mullion end									
Mullion span (in)	Tributary Height (in)	Tributary Height (in)	Tributary width (in)						
			24.00	30.00	36.00	42.00	48.00	54.00	60.00
72.00	36.00	36.00	4	4	4	4	4	4	4
76.00	40.00	36.00	4	4	4	4	4	4	2
80.00	44.00	36.00	4	2	2	2	2	-	-
84.00	48.00	36.00	2	2	2	2	-	-	-
88.00	52.00	36.00	2	2	2	-	-	-	-
92.00	56.00	36.00	2	2	-	-	-	-	-
96.00	60.00	36.00	2	-	-	-	-	-	-

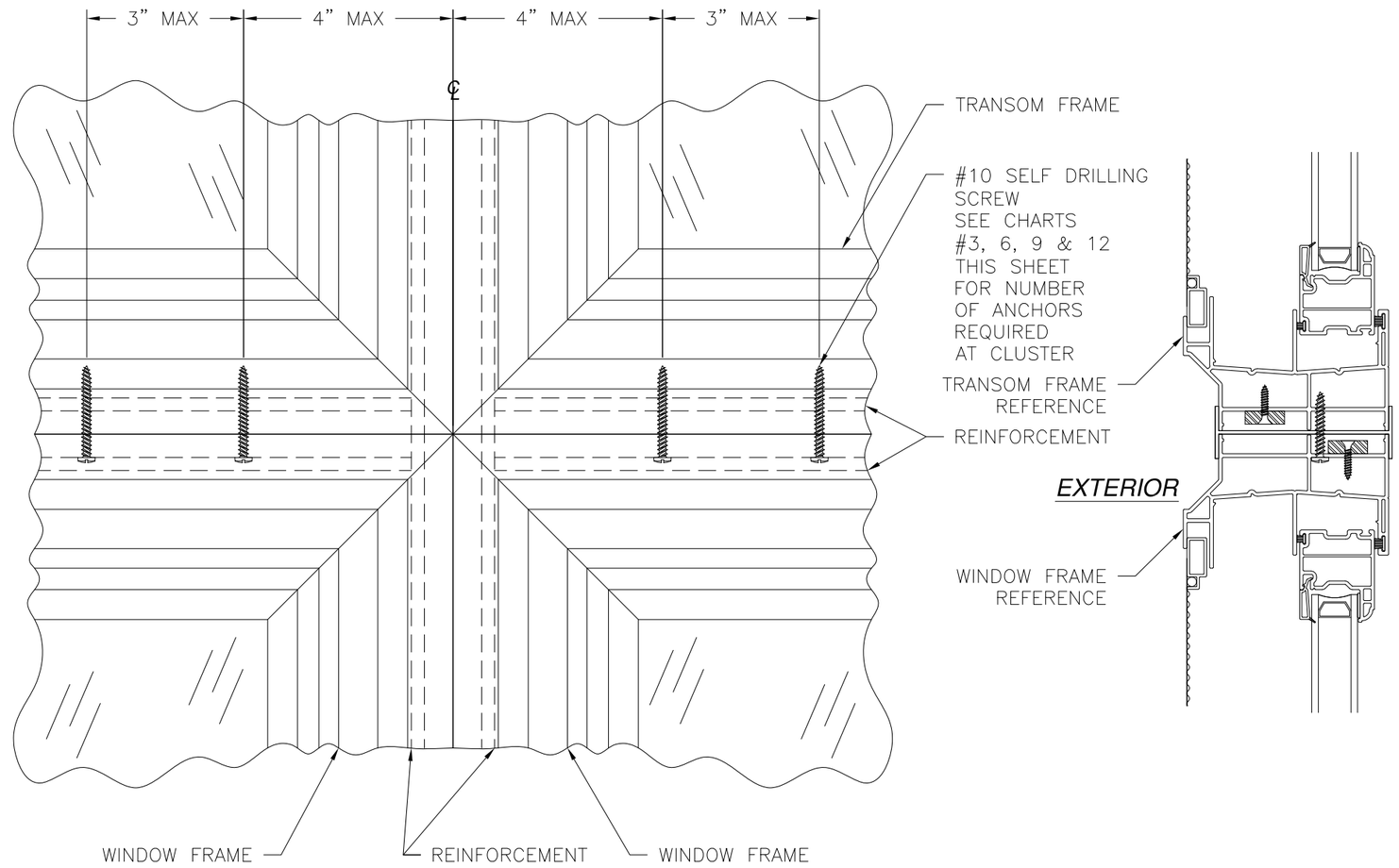

TRANSOM/WINDOW CONNECTION DETAIL A

SEE DETAIL D SHEET 7 FOR FRAME TO REINFORCEMENT INSTALLATION

SIGNED: 08/01/2019

WINDOW MART
5760 ALBERT PIKE
ROYAL, AR 71968

VX MULLION – IMPACT
(2) 1/4" X 3/4" ALUMINUM REINFORCEMENTS
INSTALLATION DETAILS

DRAWN:	DWG NO.	REV
V.L.	08-02233	A

SCALE	DATE	SHEET
NTS	10/02/13	3 OF 7

L. ROBERTO LOMAS P.E.
1432 WOODFORD RD LEWISVILLE, NC 27023
434-688-0609 rllomas@lrlomaspe.com

STATE OF TEXAS
LUIS R. LOMAS
101889
LICENSED
PROFESSIONAL ENGINEER

Luis R. Lomas P.E.
TX No.: 101889

REVISIONS			
REV	DESCRIPTION	DATE	APPROVED
A	ADDED COMPONENT DETAILS	10/02/14	R.L.

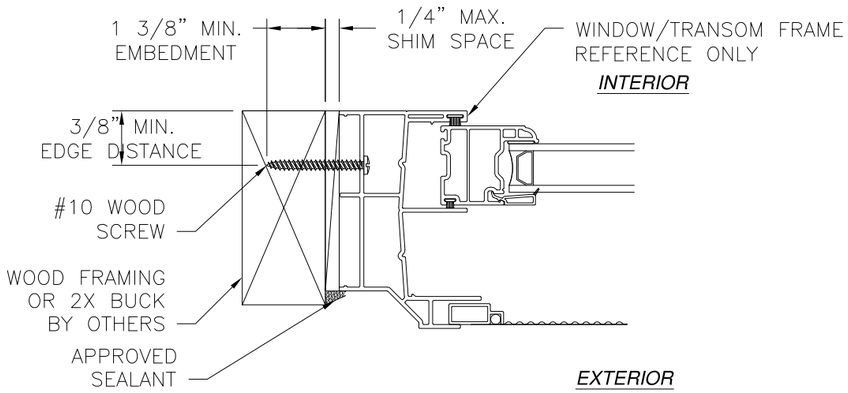

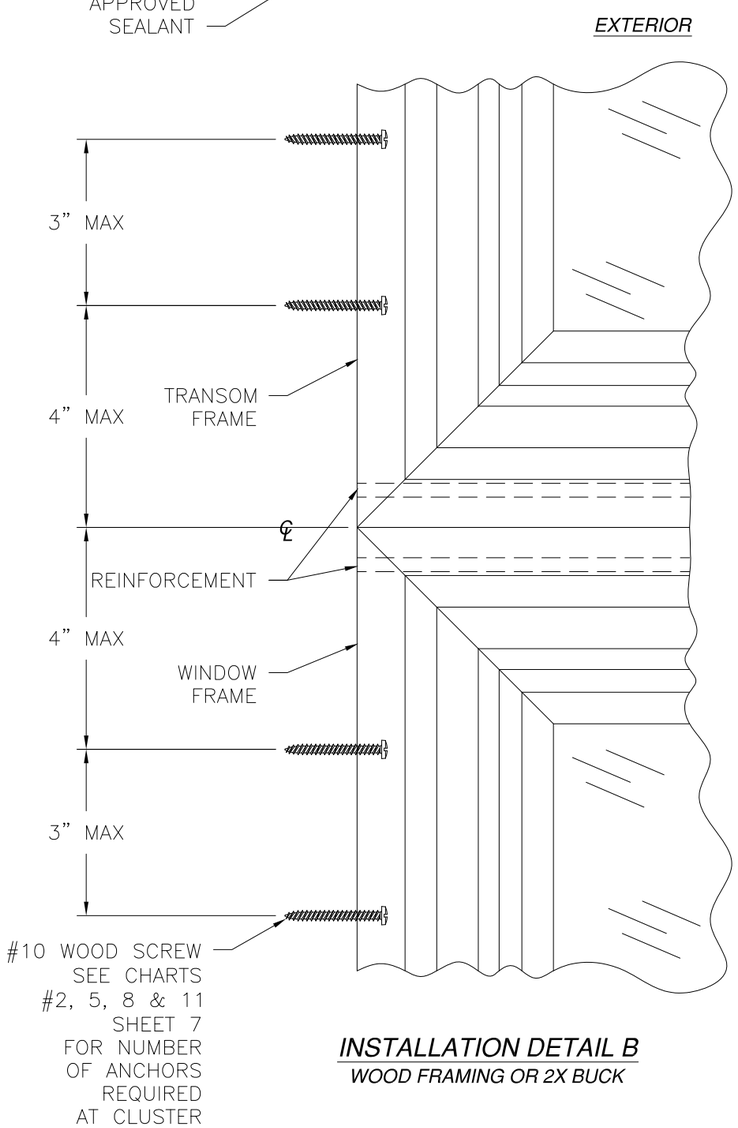

INSTALLATION DETAIL B

WOOD FRAMING OR 2X BUCK

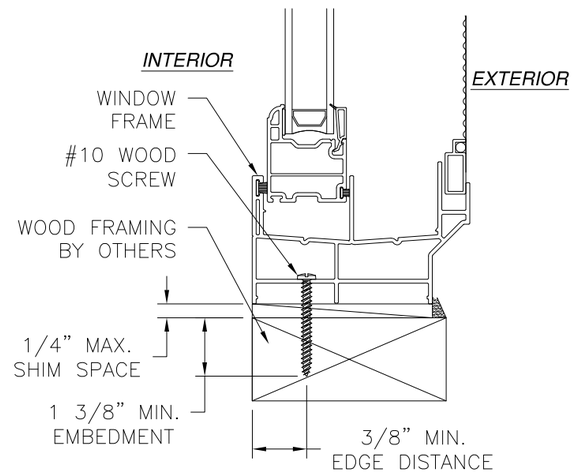

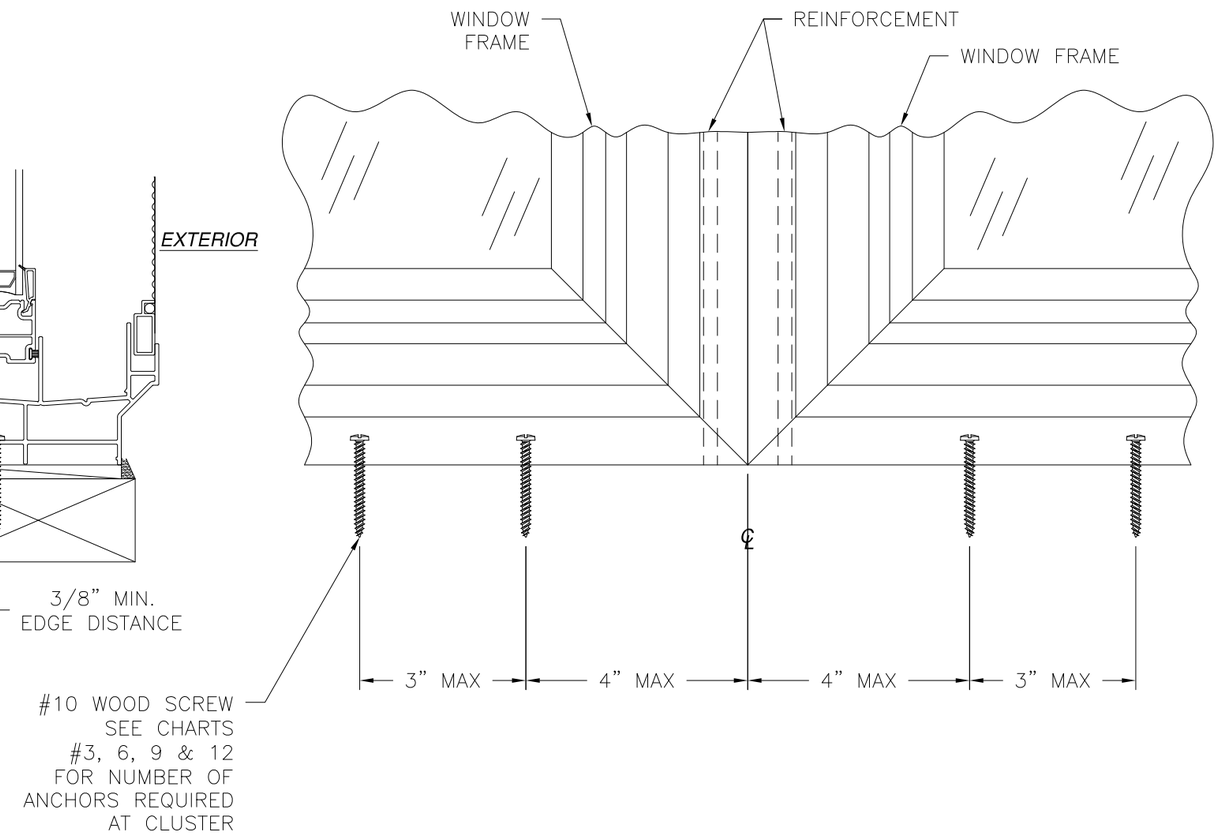

INSTALLATION DETAIL C

WOOD FRAMING OR 2X BUCK
SILL SHOWN HEAD SIMILAR

SIGNED: 08/01/2019

WINDOW MART
5760 ALBERT PIKE
ROYAL, AR 71968

VX MULLION – IMPACT
(2) 1/4" X 3/4" ALUMINUM REINFORCEMENTS
INSTALLATION DETAILS

DRAWN:	DWG NO.	REV
V.L.	08–02233	A

SCALE	DATE	SHEET
NTS	10/02/13	4 OF 7

L. ROBERTO LOMAS P.E.
1432 WOODFORD RD LEWISVILLE, NC 27023
434-688-0609 rllomas@lrlomaspe.com

Luis R. Lomas P.E.
TX No.: 101889

REVISIONS			
REV	DESCRIPTION	DATE	APPROVED
A	ADDED COMPONENT DETAILS	10/02/14	R.L.

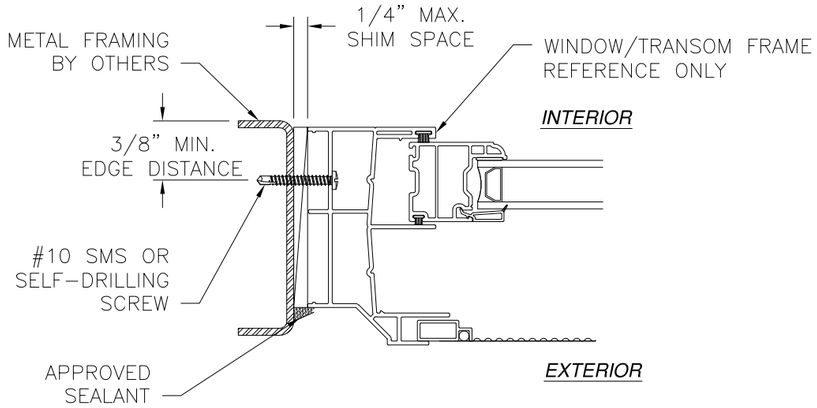

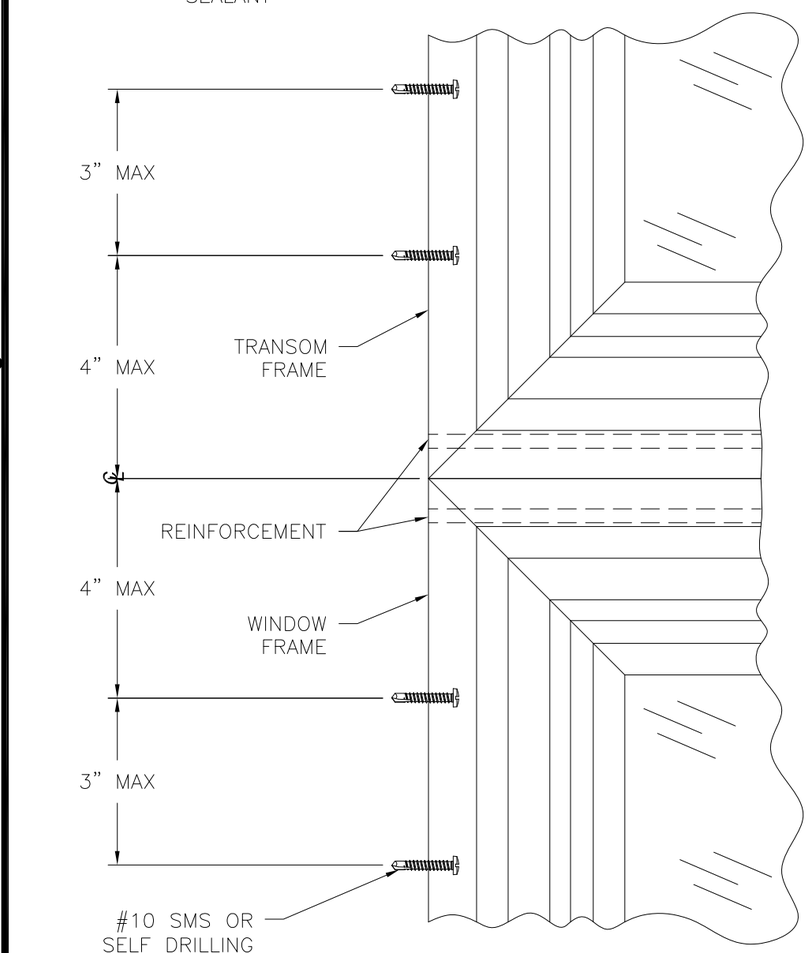

INSTALLATION DETAIL B

METAL STRUCTURE

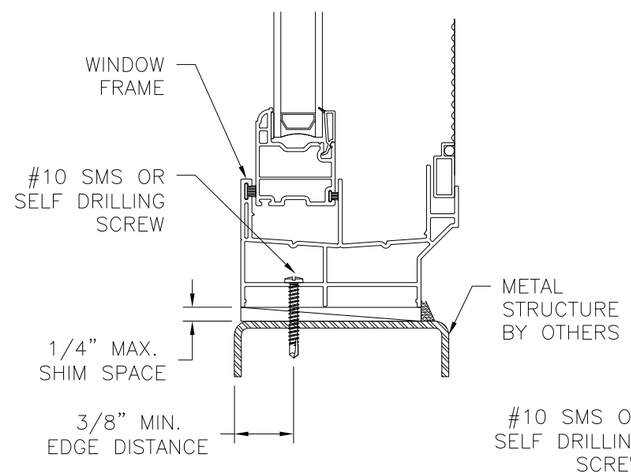

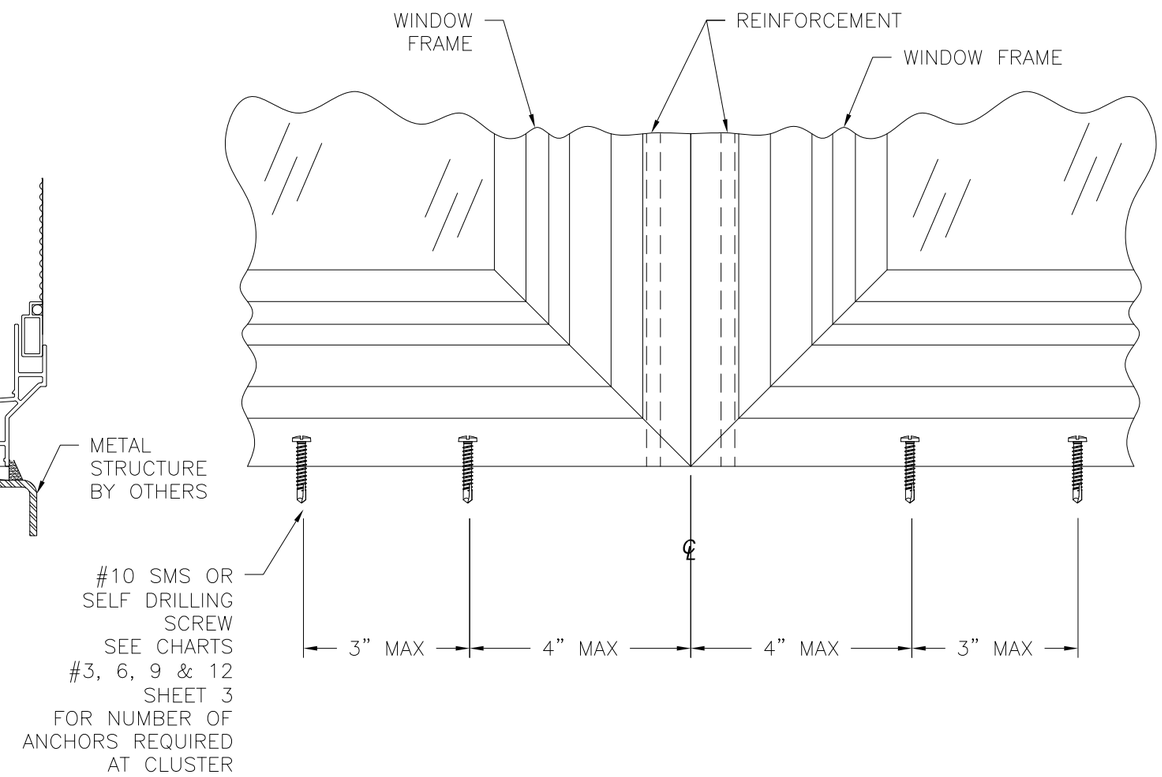

INSTALLATION DETAIL C

METAL STRUCTURE

SILL SHOWN HEAD SIMILAR

SIGNED: 08/01/2019

WINDOW MART

5760 ALBERT PIKE
ROYAL, AR 71968

VX MULLION – IMPACT
(2) 1/4" X 3/4" ALUMINUM REINFORCEMENTS
INSTALLATION DETAILS

DRAWN:	DWG NO.	REV
V.L.	08-02233	A

SCALE	DATE	SHEET
NTS	10/02/13	5 OF 7

L. ROBERTO LOMAS P.E.
1432 WOODFORD RD LEWISVILLE, NC 27023
434-688-0609 rllomas@lrlomaspe.com

Luis R. Lomas P.E.
TX No.: 101889

REVISIONS			
REV	DESCRIPTION	DATE	APPROVED
A	ADDED COMPONENT DETAILS	10/02/14	R.L.

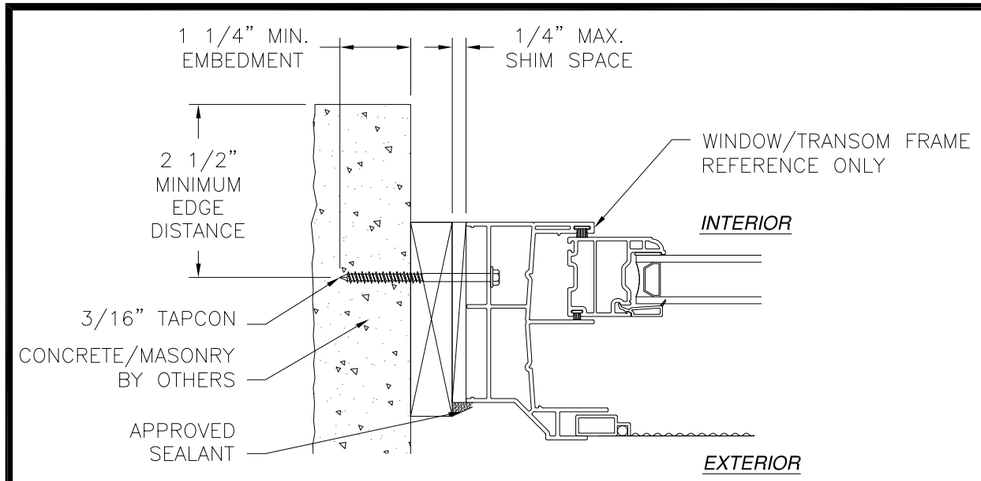

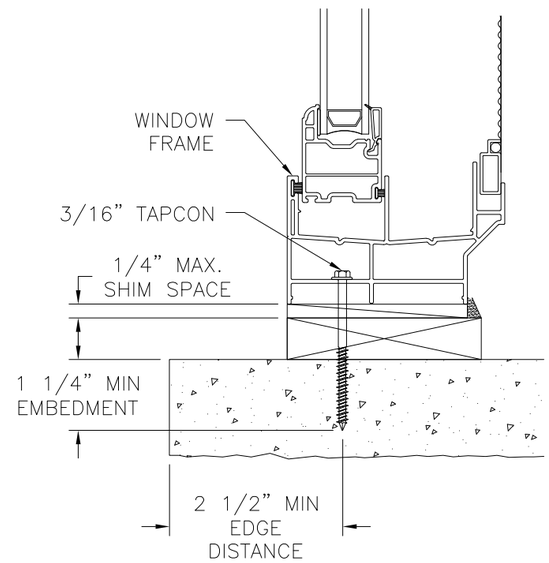

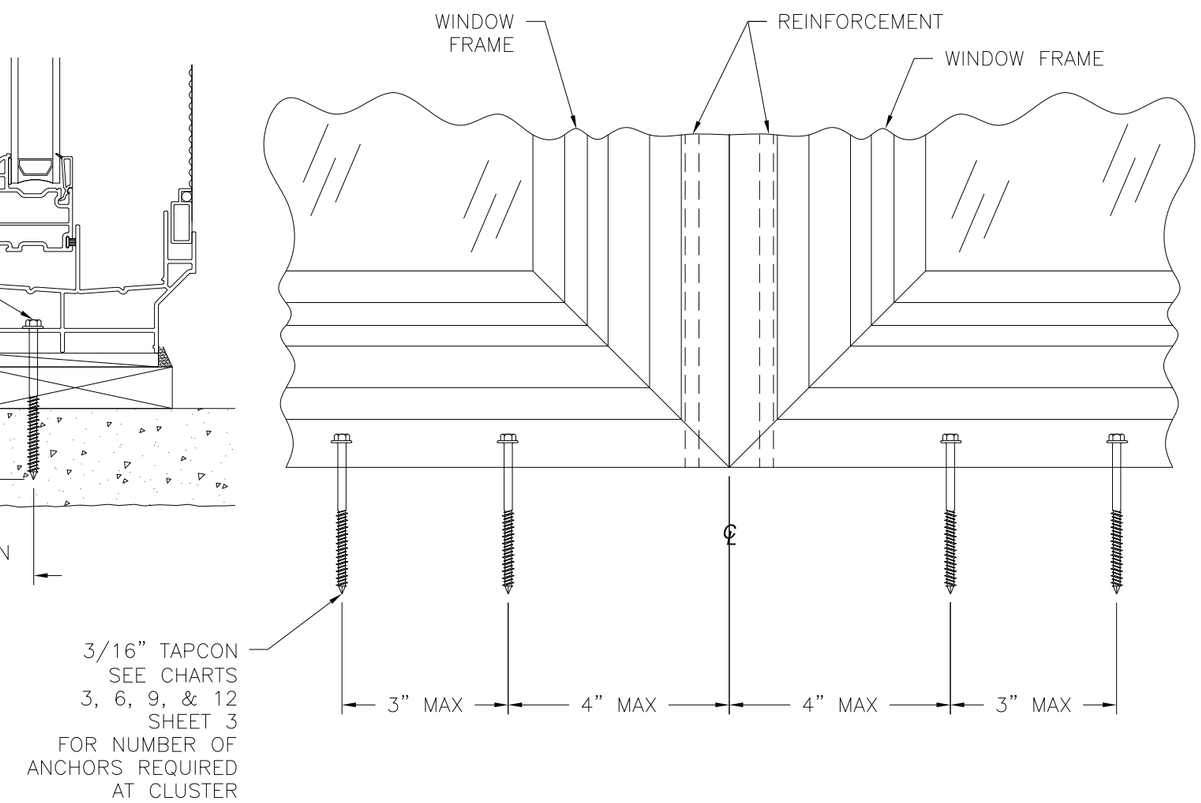

INSTALLATION DETAIL C

CONCRETE/MASONRY
SILL SHOWN HEAD SIMILAR

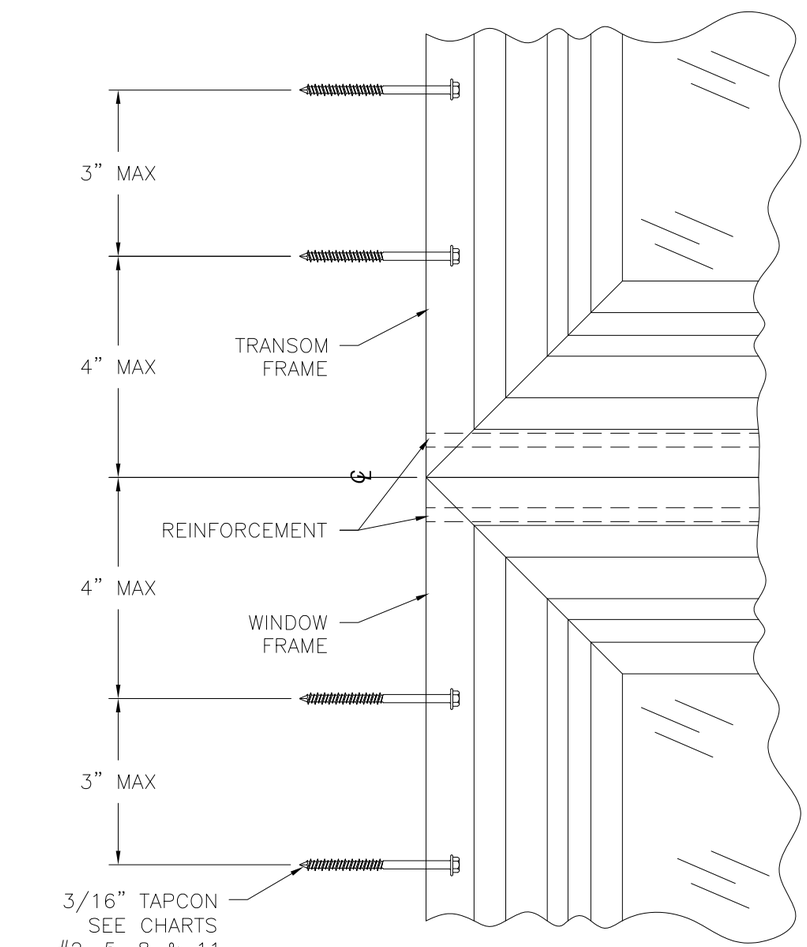

INSTALLATION DETAIL B

CONCRETE/MASONRY

SIGNED: 08/01/2019

WINDOW MART
5760 ALBERT PIKE
ROYAL, AR 71968

VX MULLION – IMPACT
(2) 1/4" X 3/4" ALUMINUM REINFORCEMENTS
INSTALLATION DETAILS

DRAWN:	DWG NO.	REV
V.L.	08–02233	A

SCALE	DATE	SHEET
NTS	10/02/13	6 OF 7

L. ROBERTO LOMAS P.E.
1432 WOODFORD RD LEWISVILLE, NC 27023
434-688-0609 rllomas@lrlomaspe.com

Luis R. Lomas P.E.
TX No.: 101889

REVISIONS			
REV	DESCRIPTION	DATE	APPROVED
A	ADDED COMPONENT DETAILS	10/02/14	R.L.

CHART #2
18" TRANSOM

Number of anchors required at horizontal mullion end									
Mullion span (in)	Tributary Height (in)	Tributary Height (in)	Tributary width (in)						
			24.00	30.00	36.00	42.00	48.00	54.00	60.00
54.00	36.00	18.00	2	2	2	2	4	4	4
60.00	42.00	18.00	2	2	2	2	2	2	2
66.00	48.00	18.00	2	2	2	2	2	2	2
72.00	54.00	18.00	2	2	2	2	2	2	2
78.00	60.00	18.00	2	2	2	2	2	2	-
84.00	66.00	18.00	2	2	2	-	-	-	-
90.00	72.00	18.00	2	2	-	-	-	-	-

CHART #5
24" TRANSOM

Number of anchors required at horizontal mullion end									
Mullion span (in)	Tributary Height (in)	Tributary Height (in)	Tributary width (in)						
			24.00	30.00	36.00	42.00	48.00	54.00	60.00
60.00	36.00	24.00	2	2	2	2	2	2	2
66.00	42.00	24.00	2	2	2	2	2	2	2
72.00	48.00	24.00	2	2	2	2	2	2	2
78.00	54.00	24.00	2	2	2	2	2	2	-
84.00	60.00	24.00	2	2	2	2	-	-	-
90.00	66.00	24.00	2	2	-	-	-	-	-
96.00	72.00	24.00	2	-	-	-	-	-	-

CHART #8
30" TRANSOM

Number of anchors required at horizontal mullion end									
Mullion span (in)	Tributary Height (in)	Tributary Height (in)	Tributary width (in)						
			24.00	30.00	36.00	42.00	48.00	54.00	60.00
72.00	42.00	30.00	2	2	2	2	2	2	2
76.00	46.00	30.00	2	2	2	2	2	2	2
80.00	50.00	30.00	2	2	2	2	2	-	-
84.00	54.00	30.00	2	2	2	2	-	-	-
88.00	58.00	30.00	2	2	2	-	-	-	-
92.00	62.00	30.00	2	2	-	-	-	-	-
96.00	66.00	30.00	2	-	-	-	-	-	-

CHART #11
36" TRANSOM

Number of anchors required at horizontal mullion end									
Mullion span (in)	Tributary Height (in)	Tributary Height (in)	Tributary width (in)						
			24.00	30.00	36.00	42.00	48.00	54.00	60.00
72.00	36.00	36.00	2	2	2	2	2	2	2
76.00	40.00	36.00	2	2	2	2	2	2	2
80.00	44.00	36.00	2	2	2	2	2	-	-
84.00	48.00	36.00	2	2	2	2	-	-	-
88.00	52.00	36.00	2	2	2	-	-	-	-
92.00	56.00	36.00	2	2	-	-	-	-	-
96.00	60.00	36.00	2	-	-	-	-	-	-

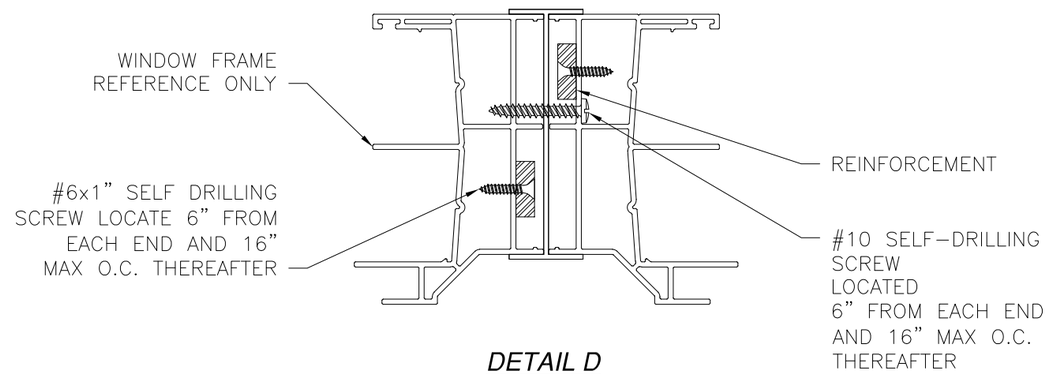

DETAIL D
WINDOW FRAME TO REINFORCEMENT INSTALLATION

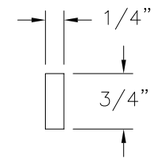

REINFORCEMENT
ALUMINUM 6105-T5

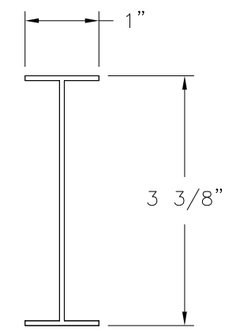

H MULL
VINYL PVC .065" THICK

SIGNED: 08/01/2019

WINDOW MART
5760 ALBERT PIKE
ROYAL, AR 71968

VX MULLION – IMPACT
(2) 1/4" X 3/4" ALUMINUM REINFORCEMENTS
COMPONENTS

DRAWN:	DWG NO.	REV
V.L.	08-02233	A

SCALE	DATE	SHEET
NTS	10/02/13	7 OF 7

L. ROBERTO LOMAS P.E.
1432 WOODFORD RD LEWISVILLE, NC 27023
434-688-0609 rllomas@lrlomaspe.com

STATE OF TEXAS
LUIS R. LOMAS
101889
LICENSED
PROFESSIONAL ENGINEER

Luis R. Lomas P.E.
TX No.: 101889