Anchor: ITW Tapcon or Tapcon LDT or Simpson Strong-Tie Sleeve-All or Wedge-All.
ITW Ramset/ Redhead Tapcon, 1/4" diameter, minimum 3" long with washer that conforms to ANSI B18.22.1 type B.
ITW Ramset/ Redhead Large Diameter Tapcon, 3/8" diameter, minimum 4" long with washer that conforms to ANSI B18.22.1 type B.
Simpson Sleeve-All / Wedge-All, 3/8" diameter, minimum 4" long with washer that conforms to ANSI B18.22.1 type B.
This chart applies to wood species with specific gravity greater than or equal to 0.42 including spruce pine fir (SPF) and southern pine (SP).
See chart for minimum washer diameter. Washer diameters in chart are based on use of Spruce Pine Fir. Washers may be 10% smaller when Southern Pine is used.
See chart for minimum edge distance required. Lowest anchor to be greater than the minimum edge distance up from the floor and less than 10-inches from the floor.
See chart for allowable load per anchor. Load per jamb = 0.5 x door width x max positive pressure x door height.
These charts do not address spring pad connections to the building.
Maximum spacing shown in chart. Lesser spacing may be used to avoid interference with door component system.
8" CMU block walls shall be of sufficient strength to resist loads.

FASTENER SPACING (inches)								DOOR WIDTH (feet and inches) at a given DESIGN PRESSURE (PSF)																	
2000 psi concrete						Grouted CMU	Hollow CMU																		
ITW Tapcon				Simpson Strong-Tie		ITW Tapcon																			
1/4"	1/4"	3/8"	3/8"	3/8" Sleeve-All	3/8" Wedge-All	3/8"	3/8"	18.6psf	20.2psf	22.9psf	27.1psf	28.6psf	34.1psf	36.8psf	39.7psf	43.5psf	47.8psf	53.1psf	58.2psf	62.6psf	68psf	75.7psf	81.7psf	87psf	92psf
24	24	24	24	24	24	24	24	12'-3"	11'-4"	10'-0"	8'-5"	8'-0"	6'-8"	6'-2"	5'-9"	5'-3"	n/a	n/a	n/a	n/a	n/a	n/a	n/a	n/a	n/a
24	24	24	24	24	24	24	23	12'-10"	11'-9"	10'-5"	8'-9"	8'-4"	7'-0"	6'-5"	6'-0"	5'-5"	n/a	n/a	n/a	n/a	n/a	n/a	n/a	n/a	n/a
24	24	24	24	24	24	24	22	13'-5"	12'-4"	10'-10"	9'-2"	8'-8"	7'-3"	6'-9"	6'-3"	5'-8"	5'-2"	n/a	n/a	n/a	n/a	n/a	n/a	n/a	n/a
24	24	24	24	24	24	24	21	14'-0"	12'-11"	11'-5"	9'-7"	9'-1"	7'-8"	7'-1"	6'-7"	6'-0"	5'-5"	n/a	n/a	n/a	n/a	n/a	n/a	n/a	n/a
24	24	24	24	24	24	24	20	14'-9"	13'-7"	12'-0"	10'-1"	9'-7"	8'-0"	7'-5"	6'-11"	6'-3"	5'-8"	5'-2"	n/a	n/a	n/a	n/a	n/a	n/a	n/a
24	24	24	24	24	24	24	19	15'-6"	14'-3"	12'-7"	10'-8"	10'-1"	8'-5"	7'-10"	7'-3"	6'-7"	6'-0"	5'-5"	n/a	n/a	n/a	n/a	n/a	n/a	n/a
24	24	24	24	24	24	24	18	16'-4"	15'-1"	13'-4"	11'-3"	10'-8"	8'-11"	8'-3"	7'-8"	7'-0"	6'-4"	5'-9"	5'-2"	n/a	n/a	n/a	n/a	n/a	n/a
24	23	24	24	24	24	24	17	17'-4"	16'-0"	14'-1"	11'-11"	11'-3"	9'-5"	8'-9"	8'-1"	7'-5"	6'-9"	6'-1"	5'-6"	5'-1"	n/a	n/a	n/a	n/a	n/a
24	23	24	24	24	24	24	16	17'-10"	16'-5"	14'-6"	12'-3"	11'-7"	9'-9"	9'-0"	8'-4"	7'-7"	6'-11"	6'-3"	5'-8"	5'-3"	n/a	n/a	n/a	n/a	n/a
24	22	24	24	23	24	24	16	18'-5"	17'-0"	15'-0"	12'-8"	12'-0"	10'-0"	9'-4"	8'-7"	7'-10"	7'-2"	6'-5"	5'-10"	5'-5"	5'-0"	n/a	n/a	n/a	n/a
24	21	24	24	23	24	24	15	18'-10"	17'-4"	15'-3"	12'-11"	12'-3"	10'-3"	9'-6"	8'-9"	8'-0"	7'-4"	6'-7"	6'-0"	5'-7"	5'-1"	n/a	n/a	n/a	n/a
24	20	24	24	22	23	24	15	19'-8"	18'-1"	15'-11"	13'-6"	12'-9"	10'-8"	9'-11"	9'-2"	8'-5"	7'-7"	6'-10"	6'-3"	5'-10"	5'-4"	n/a	n/a	n/a	n/a
24	19	24	23	20	21	24	14	20'-9"	19'-1"	16'-10"	14'-3"	13'-6"	11'-4"	10'-6"	9'-9"	8'-10"	8'-1"	7'-3"	6'-7"	6'-2"	5'-8"	5'-1"	n/a	n/a	n/a
24	18	24	21	19	20	23	13	22'-3"	20'-6"	18'-1"	15'-3"	14'-6"	12'-2"	11'-3"	10'-5"	9'-6"	8'-8"	7'-9"	7'-1"	6'-7"	6'-1"	5'-5"	5'-0"	n/a	n/a
24	17	24	20	18	19	22	12	23'-4"	21'-5"	18'-11"	16'-0"	15'-2"	12'-8"	11'-9"	10'-11"	9'-11"	9'-0"	8'-2"	7'-5"	6'-11"	6'-4"	5'-8"	5'-3"	n/a	n/a
24	16	24	19	17	18	21	12	24'-5"	22'-6"	19'-10"	16'-9"	15'-10"	13'-4"	12'-4"	11'-5"	10'-5"	9'-6"	8'-6"	7'-9"	7'-3"	6'-8"	6'-0"	5'-6"	5'-2"	n/a
24	16	24	18	16	17	20	11	25'-8"	23'-7"	20'-10"	17'-7"	16'-8"	14'-0"	12'-11"	12'-0"	10'-11"	9'-11"	8'-11"	8'-2"	7'-7"	7'-0"	6'-3"	5'-10"	5'-5"	5'-2"
23	15	24	17	15	16	18	10	27'-5"	25'-3"	22'-3"	18'-10"	17'-10"	14'-11"	13'-10"	12'-10"	11'-8"	10'-8"	9'-7"	8'-9"	8'-1"	7'-6"	6'-8"	6'-2"	5'-10"	5'-6"
22	14	24	16	14	15	17	10	n/a	27'-0"	23'-10"	20'-2"	19'-1"	16'-0"	14'-10"	13'-9"	12'-6"	11'-5"	10'-3"	9'-4"	8'-8"	8'-0"	7'-2"	6'-8"	6'-3"	5'-11"
20	13	24	15	13	14	16	9	n/a	n/a	25'-8"	21'-8"	20'-7"	17'-3"	16'-0"	14'-10"	13'-6"	12'-3"	11'-1"	10'-1"	9'-4"	8'-7"	7'-9"	7'-2"	6'-9"	6'-4"
19	12	24	14	12	13	15	8	n/a	n/a	27'-8"	23'-5"	22'-2"	18'-7"	17'-3"	16'-0"	14'-7"	13'-3"	11'-11"	10'-11"	10'-1"	9'-4"	8'-4"	7'-9"	7'-3"	6'-10"
17	11	24	12	11	12	13	7	n/a	n/a	n/a	25'-8"	24'-4"	20'-4"	18'-10"	17'-6"	16'-0"	14'-6"	13'-1"	11'-11"	11'-1"	10'-2"	9'-2"	8'-6"	8'-0"	7'-6"
15	10	24	11	10	11	12	7	n/a	n/a	n/a	n/a	26'-9"	22'-5"	20'-9"	19'-3"	17'-7"	16'-0"	14'-5"	13'-1"	12'-2"	11'-3"	10'-1"	9'-4"	8'-9"	8'-3"
14	9	24	10	9	9	11	6	n/a	n/a	n/a	n/a	n/a	24'-11"	23'-1"	21'-5"	19'-6"	17'-9"	16'-0"	14'-7"	13'-7"	12'-6"	11'-2"	10'-4"	9'-9"	9'-2"
12	8	21	9	8	8	10	n/a	n/a	n/a	n/a	n/a	n/a	27'-11"	25'-11"	24'-0"	21'-11"	19'-11"	17'-11"	16'-4"	15'-2"	14'-0"	12'-7"	11'-8"	10'-11"	10'-4"
11	7	18	8	7	7	8	n/a	n/a	n/a	n/a	n/a	n/a	n/a	n/a	27'-5"	25'-0"	22'-9"	20'-6"	18'-8"	17'-5"	16'-0"	14'-4"	13'-4"	12'-6"	11'-10"
9	6	16	7	6	6	7	n/a	n/a	n/a	n/a	n/a	n/a	n/a	n/a	n/a	n/a	26'-3"	23'-7"	21'-6"	20'-0"	18'-5"	16'-6"	15'-4"	14'-5"	13'-7"
8	5	14	6	n/a	5	6	n/a	n/a	n/a	n/a	n/a	n/a	n/a	n/a	n/a	n/a	n/a	27'-8"	25'-3"	23'-6"	21'-7"	19'-5"	18'-0"	16'-11"	16'-0"
2000 psi concrete						Grouted CMU	Hollow CMU	18.6psf	20.2psf	22.9psf	27.1psf	28.6psf	34.1psf	36.8psf	39.7psf	43.5psf	47.8psf	53.1psf	58.2psf	62.6psf	68psf	75.7psf	81.7psf	87psf	92psf
Tapcon				Sleeve-All	Wedge-All	Tapcon		DOOR WIDTH (feet and inches) at a given DESIGN PRESSURE (PSF)																	
1/4"	1/4"	3/8"	3/8"	3/8"	3/8"	3/8"	3/8"	FASTENER DIAMETER																	
2.5"	2.5"	3"	3"	3"	3"	2"	2"	FASTENER LENGTH																	
1.75"	1.75"	2.5"	2.5"	1.5"	1.75"	1.5"	1.5"	EMBEDMENT LENGTH																	
1-1/4"	7/8"	1-1/2"	1"	1"	1"	1-1/8"	7/8"	WASHER DIAMETER																	
2-1/2"	2-1/2"	3"	3"	3"	3"	3"	3"	EDGE DISTANCE																	
505#	319#	859#	371#	336#	351#	398#	229#	FASTENER LOAD CAPACITY																	

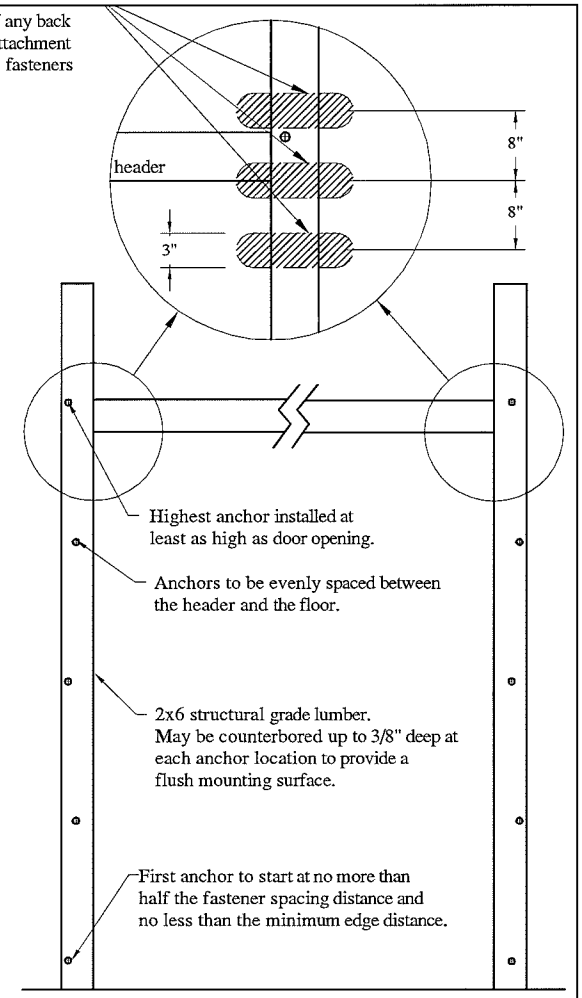

Alternative design may be approved by a registered professional engineer.
Supporting structural elements shall be designed by registered professional engineer for wind loads in addition to other loads.
Calculation reference:
DASMA TDS #161C, 2005 AF&PA NDS for Wood Construction and Simpson Strong-Tie data.

Professional Engineer's seal provided only for verification of windload construction details

John E. Scates, P.E.
3121 Fairgate Drive
Carrollton, Texas 75007
TXPE 56308, F-2203

C.H.I. OVERHEAD DOORS

SCALE none

DATE 9-28-2011

Back Jamb Attachment Detail
Concrete Anchors

C.H.I. Drawing: BJA-101-02

Southern Pine (SP) specific gravity = 0.55; allowable load per anchor = 577 pounds.
Spruce Pine Fir (SPF) specific gravity = 0.42; allowable load per anchor = 385 pounds.
Use SP values only if both structure and jamb are southern pine.
Use SPF values when spruce pine fir is present in structure or jamb material.
Lag screw: 3/8" diameter x 3" min long; must conform to ANSI/ASME B18.2.1
When applying back jambs over dry wall or other non structural wall covering, use longer lags screws to insure 1-1/2" minimum embedment required.
Washer: 1-1/8" minimum outside diameter and 13/32" inside diameter; must conform to ANSI B18.22.1 type A.
Pre-drill 1/4" diameter pilot holes for lag screw insertion.
1-1/2" minimum lag screw edge distance required.
Maximum spacing shown in chart. Lesser spacing may be used to avoid interference with door hardware and or fastening system.
Spring pad attachment details not included.
Maximum load per jamb = 0.5 x (door height) x (door width) x (maximum positive pressure)

FASTENER SPACING (inches)		DOOR WIDTH (feet and inches) at a given DESIGN PRESSURE (PSF)																			
SPF	SP	22.2psf	24psf	25.1psf	27.5psf	28.8psf	32psf	33.9psf	35.9psf	41.2psf	43.2psf	45.4psf	48psf	50.8psf	54psf	61.7psf	66.5psf	72psf	78.6psf	86.5psf	96.1psf
24	24	17'-4"	16'-0"	15'-4"	14'-0"	13'-4"	12'-0"	11'-4"	10'-8"	9'-4"	8'-10"	8'-5"	8'-0"	7'-6"	7'-1"	6'-2"	5'-9"	5'-4"	n/a	n/a	n/a
23	24	18'-1"	16'-8"	16'-0"	14'-7"	13'-11"	12'-6"	11'-10"	11'-2"	9'-9"	9'-3"	8'-10"	8'-4"	7'-10"	7'-5"	6'-6"	6'-0"	5'-6"	5'-1"	n/a	n/a
22	24	18'-11"	17'-6"	16'-8"	15'-3"	14'-6"	13'-1"	12'-4"	11'-8"	10'-2"	9'-8"	9'-3"	8'-9"	8'-3"	7'-9"	6'-9"	6'-3"	5'-10"	5'-4"	n/a	n/a
21	24	19'-9"	18'-3"	17'-6"	16'-0"	15'-3"	13'-9"	12'-11"	12'-3"	10'-8"	10'-2"	9'-8"	9'-1"	8'-7"	8'-1"	7'-1"	6'-7"	6'-1"	5'-7"	5'-1"	n/a
20	24	20'-9"	19'-3"	18'-4"	16'-9"	16'-0"	14'-5"	13'-7"	12'-10"	11'-2"	10'-8"	10'-2"	9'-7"	9'-1"	8'-6"	7'-5"	6'-11"	6'-5"	5'-10"	5'-4"	n/a
19	24	21'-10"	20'-3"	19'-4"	17'-8"	16'-10"	15'-2"	14'-4"	13'-6"	11'-9"	11'-3"	10'-8"	10'-1"	9'-6"	9'-0"	7'-10"	7'-3"	6'-9"	6'-2"	5'-7"	5'-0"
18	24	23'-1"	21'-4"	20'-5"	18'-8"	17'-9"	16'-0"	15'-1"	14'-3"	12'-5"	11'-10"	11'-3"	10'-8"	10'-1"	9'-6"	8'-3"	7'-8"	7'-1"	6'-6"	5'-11"	5'-4"
17	24	24'-5"	22'-7"	21'-7"	19'-9"	18'-10"	16'-11"	16'-0"	15'-1"	13'-2"	12'-6"	11'-11"	11'-3"	10'-8"	10'-0"	8'-9"	8'-2"	7'-6"	6'-10"	6'-3"	5'-7"
16	24	25'-11"	23'-11"	22'-11"	20'-11"	19'-11"	17'-11"	16'-11"	16'-0"	13'-11"	13'-3"	12'-8"	11'-11"	11'-3"	10'-7"	9'-3"	8'-7"	7'-11"	7'-3"	6'-7"	5'-11"
15	23	27'-1"	25'-1"	23'-11"	21'-10"	20'-10"	18'-9"	17'-9"	16'-9"	14'-7"	13'-11"	13'-3"	12'-6"	11'-10"	11'-1"	9'-9"	9'-0"	8'-4"	7'-7"	6'-11"	6'-3"
14	22	n/a	26'-2"	25'-0"	22'-10"	21'-10"	19'-8"	18'-6"	17'-6"	15'-3"	14'-6"	13'-10"	13'-1"	12'-4"	11'-7"	10'-2"	9'-5"	8'-8"	8'-0"	7'-3"	6'-6"
14	21	n/a	27'-5"	26'-3"	23'-11"	22'-10"	20'-7"	19'-5"	18'-4"	16'-0"	15'-3"	14'-6"	13'-8"	12'-11"	12'-2"	10'-8"	9'-10"	9'-1"	8'-4"	7'-7"	6'-10"
13	20	n/a	n/a	27'-7"	25'-2"	24'-0"	21'-7"	20'-5"	19'-3"	16'-9"	16'-0"	15'-3"	14'-5"	13'-7"	12'-9"	11'-2"	10'-4"	9'-7"	8'-9"	8'-0"	7'-2"
12	19	n/a	n/a	n/a	26'-6"	25'-3"	22'-9"	21'-5"	20'-3"	17'-8"	16'-10"	16'-0"	15'-2"	14'-4"	13'-5"	11'-9"	10'-11"	10'-1"	9'-3"	8'-5"	7'-7"
12	18	n/a	n/a	n/a	27'-11"	26'-8"	24'-0"	22'-8"	21'-5"	18'-8"	17'-9"	16'-11"	16'-0"	15'-1"	14'-2"	12'-5"	11'-6"	10'-8"	9'-9"	8'-10"	8'-0"
11	17	n/a	n/a	n/a	n/a	n/a	25'-5"	24'-0"	22'-8"	19'-9"	18'-10"	17'-11"	16'-11"	16'-0"	15'-1"	13'-2"	12'-2"	11'-3"	10'-4"	9'-5"	8'-5"
10	16	n/a	n/a	n/a	n/a	n/a	27'-0"	25'-6"	24'-1"	21'-0"	20'-0"	19'-0"	18'-0"	17'-0"	16'-0"	14'-0"	13'-0"	12'-0"	11'-0"	10'-0"	9'-0"
10	15	n/a	n/a	n/a	n/a	n/a	n/a	27'-2"	25'-8"	22'-4"	21'-4"	20'-4"	19'-2"	18'-2"	17'-1"	14'-11"	13'-10"	12'-9"	11'-8"	10'-8"	9'-7"
9	14	n/a	n/a	n/a	n/a	n/a	n/a	n/a	27'-6"	24'-0"	22'-10"	21'-9"	20'-7"	19'-5"	18'-3"	16'-0"	14'-10"	13'-8"	12'-7"	11'-5"	10'-3"
8	13	n/a	n/a	n/a	n/a	n/a	n/a	n/a	n/a	25'-10"	24'-7"	23'-5"	22'-2"	20'-11"	19'-8"	17'-3"	16'-0"	14'-9"	13'-6"	12'-3"	11'-1"
8	12	n/a	n/a	n/a	n/a	n/a	n/a	n/a	n/a	n/a	26'-8"	25'-5"	24'-0"	22'-8"	21'-4"	18'-8"	17'-4"	16'-0"	14'-8"	13'-4"	12'-0"
7	11	n/a	n/a	n/a	n/a	n/a	n/a	n/a	n/a	n/a	n/a	27'-8"	26'-2"	24'-9"	23'-3"	20'-4"	18'-11"	17'-5"	16'-0"	14'-6"	13'-1"
6	10	n/a	n/a	n/a	n/a	n/a	n/a	n/a	n/a	n/a	n/a	n/a	n/a	27'-3"	25'-7"	22'-5"	20'-9"	19'-2"	17'-7"	16'-0"	14'-4"
6	9	n/a	n/a	n/a	n/a	n/a	n/a	n/a	n/a	n/a	n/a	n/a	n/a	n/a	n/a	24'-11"	23'-1"	21'-4"	19'-6"	17'-9"	16'-0"
5	8	n/a	n/a	n/a	n/a	n/a	n/a	n/a	n/a	n/a	n/a	n/a	n/a	n/a	n/a	n/a	26'-0"	24'-0"	22'-0"	20'-0"	18'-0"
4	7	n/a	n/a	n/a	n/a	n/a	n/a	n/a	n/a	n/a	n/a	n/a	n/a	n/a	n/a	n/a	n/a	27'-5"	25'-2"	22'-10"	20'-7"
SPF	SP	22.2psf	24psf	25.1psf	27.5psf	28.8psf	32psf	33.9psf	35.9psf	41.2psf	43.2psf	45.4psf	48psf	50.8psf	54psf	61.7psf	66.5psf	72psf	78.6psf	86.5psf	96.1psf
FASTENER SPACING (inches)		DOOR WIDTH (feet and inches) at a given DESIGN PRESSURE (PSF)																			

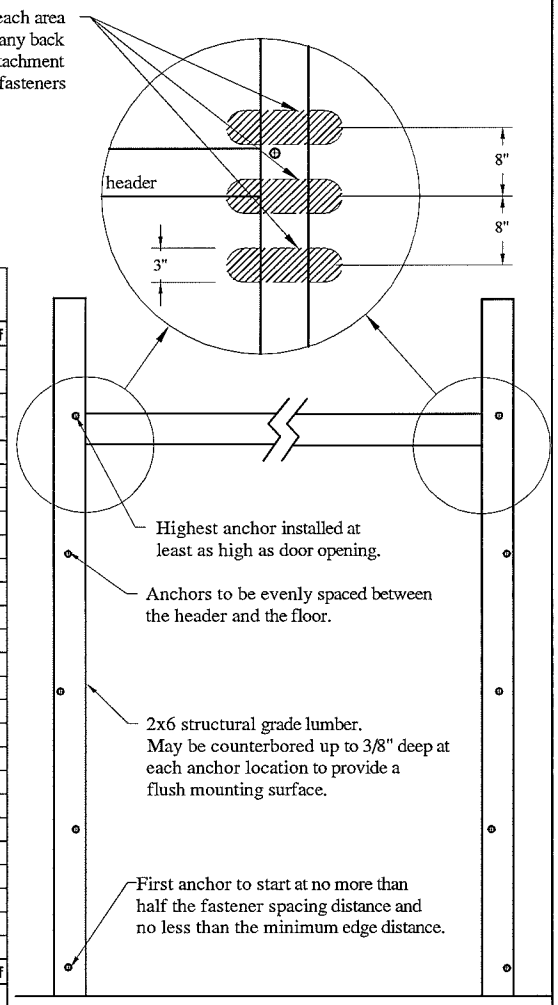

Alternative design may be approved by a registered professional engineer.
Supporting structural elements shall be designed by a registered professional engineer for wind loads in addition to other loads.
Calculation reference: DASMA TDS #161E and 2005 AF&PA NDS for Wood Construction.

John E. Scates 12/10/12
Professional Engineer's seal provided only for verification of windload construction details

John E. Scates, P.E.
3121 Fairgate Drive
Carrollton, Texas 75007
TXPE 56308, F-2203

C.H.I. OVERHEAD DOORS

SCALE none

DATE 4-18-2011

Back Jamb Attachment Detail
Lag Screw

C.H.I. Drawing: BJA-102-01

Self tapping screws (with steel)

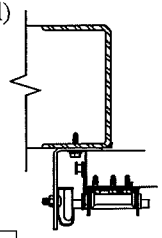

Anchor: 1/4" dia x 3/4" self tapping screw; must conform to ANSI/ASME B18.2.1.
3/16" steel Jambs; allowable load per screw= 444 lbs.
12 gauge steel Jambs; allowable load per screw= 209 lbs.
Washer: 1-1/8" O.D. / 3/8" I.D. min; must conform to ANSI B18.22.1 type A.
Lowest fastener to be within 10-inches of the floor
Minimum of 3 anchors per jamb allowed.
Maximum spacing shown in chart. Lesser spacing may be used to avoid interference with door component system.
Add holes to continuous angle as required to satisfy fastener spacing in these charts.
These charts do not address spring pad connections to the building.
Load per jamb = 0.5 x door width x max positive pressure x door height
Calculation reference: DASMA TDS #161h, ITW Buildex Online Performance Data.

.100" x 1" fillet welds

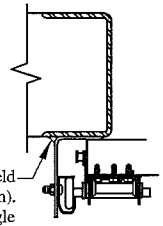

.100" x 1" long fillet weld (E60XX Electrodes Min). Weld to be located vertically on angle at spacing specified in chart and tack weld toe of angle at same spacing.

Anchor: welds performed by a Certified Welder or inspected by a Certified Welding Inspector to verify integrity of welds.
12 gauge or 3/16" steel Jambs; allowable load per weld= 1,272 lbs.
Use all necessary precautions when welding galvanized steel.
Welds to be evenly spaced between header and floor.
Lowest weld to be within 10-inches of the floor
Minimum of 3 welds per jamb allowed.
Fillet welds to have a straight or convex face surface.
Tack weld toe of angle at same spacing to prevent rotation of track angle.
Cracks and blemishes shall be ground to a smooth contour and checked to ensure soundness.
These charts do not address spring pad connections to the building.
Load per jamb = 0.5 x door width x max positive pressure x door height
Calculation reference: DASMA TDS #161g.

ATTACHMENT SPACING (inches)			DOOR WIDTH (feet and inches) at a given DESIGN PRESSURE (PSF)																	
SCREWS		WELDS																		
12 ga jamb	3/16" jamb	12 ga jamb	28.5psf	30.2psf	31.4psf	32.9psf	34.6psf	36.5psf	38.7psf	41.6psf	44.4psf	47.5psf	51.2psf	55.5psf	60.5psf	66.5psf	74psf	82.8psf	86.6psf	95.3psf
24	24	24	7'-4"	6'-11"	6'-7"	6'-4"	6'-0"	5'-8"	5'-4"	5'-0"	n/a	n/a	n/a	n/a	n/a	n/a	n/a	n/a	n/a	n/a
23	24	24	7'-7"	7'-2"	6'-11"	6'-7"	6'-3"	5'-11"	5'-7"	5'-2"	n/a	n/a	n/a	n/a	n/a	n/a	n/a	n/a	n/a	n/a
22	24	24	8'-0"	7'-6"	7'-3"	6'-11"	6'-7"	6'-2"	5'-10"	5'-5"	5'-1"	n/a	n/a	n/a	n/a	n/a	n/a	n/a	n/a	n/a
21	24	24	8'-4"	7'-10"	7'-7"	7'-3"	6'-10"	6'-6"	6'-2"	5'-8"	5'-4"	5'-0"	n/a	n/a	n/a	n/a	n/a	n/a	n/a	n/a
20	24	24	8'-9"	8'-3"	7'-11"	7'-7"	7'-2"	6'-10"	6'-5"	6'-0"	5'-7"	5'-3"	n/a	n/a	n/a	n/a	n/a	n/a	n/a	n/a
19	24	24	9'-3"	8'-8"	8'-4"	8'-0"	7'-7"	7'-2"	6'-9"	6'-4"	5'-11"	5'-6"	5'-1"	n/a	n/a	n/a	n/a	n/a	n/a	n/a
18	24	24	9'-9"	9'-2"	8'-10"	8'-5"	8'-0"	7'-7"	7'-2"	6'-8"	6'-3"	5'-10"	5'-5"	5'-0"	n/a	n/a	n/a	n/a	n/a	n/a
17	24	24	10'-4"	9'-9"	9'-4"	8'-11"	8'-6"	8'-1"	7'-7"	7'-1"	6'-7"	6'-2"	5'-9"	5'-3"	n/a	n/a	n/a	n/a	n/a	n/a
16	24	24	11'-0"	10'-4"	9'-11"	9'-6"	9'-0"	8'-7"	8'-1"	7'-6"	7'-0"	6'-7"	6'-1"	5'-7"	5'-2"	n/a	n/a	n/a	n/a	n/a
15	24	24	11'-8"	11'-0"	10'-7"	10'-1"	9'-7"	9'-1"	8'-7"	8'-0"	7'-6"	7'-0"	6'-6"	6'-0"	5'-6"	5'-0"	n/a	n/a	n/a	n/a
14	24	24	12'-6"	11'-10"	11'-4"	10'-10"	10'-4"	9'-9"	9'-3"	8'-7"	8'-0"	7'-6"	6'-11"	6'-5"	5'-11"	5'-4"	n/a	n/a	n/a	n/a
13	24	24	13'-6"	12'-9"	12'-3"	11'-8"	11'-1"	10'-6"	9'-11"	9'-3"	8'-8"	8'-1"	7'-6"	6'-11"	6'-4"	5'-9"	5'-2"	n/a	n/a	n/a
12	24	24	14'-7"	13'-10"	13'-3"	12'-8"	12'-0"	11'-5"	10'-9"	10'-0"	9'-4"	8'-9"	8'-1"	7'-6"	6'-10"	6'-3"	5'-7"	5'-0"	n/a	n/a
11	23	24	16'-0"	15'-1"	14'-6"	13'-10"	13'-2"	12'-5"	11'-9"	10'-11"	10'-3"	9'-7"	8'-10"	8'-2"	7'-6"	6'-10"	6'-1"	5'-6"	5'-3"	n/a
10	22	24	16'-11"	16'-0"	15'-5"	14'-8"	13'-11"	13'-3"	12'-6"	11'-7"	10'-10"	10'-2"	9'-5"	8'-8"	8'-0"	7'-3"	6'-6"	5'-10"	5'-7"	5'-0"
10	21	24	17'-7"	16'-7"	16'-0"	15'-3"	14'-6"	13'-9"	12'-11"	12'-0"	11'-3"	10'-6"	9'-9"	9'-0"	8'-3"	7'-6"	6'-9"	6'-0"	5'-9"	5'-3"
9	20	24	18'-6"	17'-5"	16'-9"	16'-0"	15'-2"	14'-5"	13'-7"	12'-8"	11'-10"	11'-1"	10'-3"	9'-6"	8'-8"	7'-11"	7'-1"	6'-4"	6'-1"	5'-6"
9	19	24	19'-5"	18'-4"	17'-8"	16'-10"	16'-0"	15'-2"	14'-4"	13'-4"	12'-6"	11'-8"	10'-10"	10'-0"	9'-2"	8'-4"	7'-6"	6'-8"	6'-4"	5'-9"
8	18	24	20'-6"	19'-4"	18'-7"	17'-9"	16'-11"	16'-0"	15'-1"	14'-0"	13'-2"	12'-3"	11'-5"	10'-6"	9'-8"	8'-9"	7'-10"	7'-0"	6'-9"	6'-1"
8	17	24	21'-8"	20'-6"	19'-8"	18'-9"	17'-10"	16'-11"	16'-0"	14'-10"	13'-11"	13'-0"	12'-1"	11'-1"	10'-2"	9'-3"	8'-4"	7'-5"	7'-1"	6'-6"
7	16	24	23'-4"	22'-0"	21'-2"	20'-2"	19'-2"	18'-2"	17'-2"	16'-0"	15'-0"	14'-0"	13'-0"	12'-0"	11'-0"	10'-0"	9'-0"	8'-0"	7'-8"	6'-11"
7	15	24	24'-11"	23'-6"	22'-7"	21'-7"	20'-6"	19'-5"	18'-4"	17'-0"	16'-0"	14'-11"	13'-10"	12'-9"	11'-8"	10'-8"	9'-7"	8'-6"	8'-2"	7'-5"
6	14	24	26'-8"	25'-2"	24'-2"	23'-1"	21'-11"	20'-10"	19'-8"	18'-3"	17'-1"	16'-0"	14'-10"	13'-8"	12'-6"	11'-5"	10'-3"	9'-2"	8'-9"	7'-11"
6	13	24	n/a	27'-1"	26'-1"	24'-10"	23'-8"	22'-5"	21'-2"	19'-8"	18'-5"	17'-3"	16'-0"	14'-9"	13'-6"	12'-3"	11'-0"	9'-10"	9'-5"	8'-7"
5	12	24	n/a	n/a	n/a	26'-11"	25'-7"	24'-3"	22'-11"	21'-4"	20'-0"	18'-8"	17'-4"	16'-0"	14'-8"	13'-4"	12'-0"	10'-8"	10'-3"	9'-3"
5	11	24	n/a	n/a	n/a	n/a	27'-11"	26'-6"	25'-0"	23'-3"	21'-9"	20'-4"	18'-11"	17'-5"	16'-0"	14'-6"	13'-1"	11'-8"	11'-2"	10'-1"
4	10	24	n/a	n/a	n/a	n/a	n/a	n/a	27'-6"	25'-7"	24'-0"	22'-5"	20'-9"	19'-2"	17'-7"	16'-0"	14'-4"	12'-10"	12'-3"	11'-2"
4	9	24	n/a	n/a	n/a	n/a	n/a	n/a	n/a	n/a	26'-8"	24'-11"	23'-1"	21'-3"	19'-6"	17'-9"	16'-0"	14'-3"	13'-8"	12'-5"
3	8	23	n/a	n/a	n/a	n/a	n/a	n/a	n/a	n/a	n/a	27'-11"	25'-11"	23'-10"	21'-11"	19'-11"	17'-11"	16'-0"	15'-3"	13'-11"
3	7	22	n/a	n/a	n/a	n/a	n/a	n/a	n/a	n/a	n/a	n/a	27'-1"	25'-0"	22'-11"	20'-10"	18'-9"	16'-9"	16'-0"	14'-6"
3	7	21	n/a	n/a	n/a	n/a	n/a	n/a	n/a	n/a	n/a	n/a	n/a	26'-2"	24'-0"	21'-10"	19'-7"	17'-6"	16'-9"	15'-3"
3	7	20	n/a	n/a	n/a	n/a	n/a	n/a	n/a	n/a	n/a	n/a	n/a	27'-6"	25'-2"	22'-11"	20'-7"	18'-5"	17'-7"	16'-0"
3	6	19	n/a	n/a	n/a	n/a	n/a	n/a	n/a	n/a	n/a	n/a	n/a	n/a	26'-6"	24'-1"	21'-8"	19'-4"	18'-6"	16'-10"
SCREWS		WELDS	28.5psf	30.2psf	31.4psf	32.9psf	34.6psf	36.5psf	38.7psf	41.6psf	44.4psf	47.5psf	51.2psf	55.5psf	60.5psf	66.5psf	74psf	82.8psf	86.6psf	95.3psf
12 ga jamb	3/16" jamb	12 ga jamb	DOOR WIDTH (feet and inches) at a given DESIGN PRESSURE (PSF)																	
ATTACHMENT SPACING (inches)																				

Alternative design may be approved by a registered professional engineer.

Supporting structural elements shall be designed by a registered professional engineer for wind loads in addition to other loads.

This drawing does not address the jamb/wall design, but only door attachment. Jamb/wall construction is shown only for illustration purposes. The building designer is responsible for ensuring that the jamb/wall is sufficient to carry the door live and static loads.

C.H.I. OVERHEAD DOORS

SCALE none

DATE 4-18-2011

Professional Engineer's seal provided only for verification of windload construction details

John E. Scates, P.E.
3121 Fairgate Drive
Carrollton, Texas 75007
TXPE 56308, F-2203

Steel Attachment Detail

C.H.I. Drawing: BJA-103-01

Anchor: ITW Ramset/ Redhead Tapcon, with washer that conforms to ANSI B18.22.1 type B.
ITW Ramset/ Redhead Tapcon XL, 1/4" diameter (with 13/16" diameter washer). Lesser spacing used to avoid interference with door component system must not be less than 4".
ITW Ramset/ Redhead Tapcon XL, 5/16" diameter (with 13/16" diameter washer). Lesser spacing used to avoid interference with door component system must not be less than 6".
ITW Ramset/ Redhead Large Diameter Tapcon, 1/2" diameter (with 1" diameter washer). Lesser spacing used to avoid interference with door component system must not be less than 8".
See chart for minimum edge distance required. Lowest anchor to be greater than the minimum edge distance up from the floor and less than 10-inches from the floor.
Load per jamb = 0.5 x door width x max positive pressure x door height
These charts do not address spring pad connections to the building.
Maximum spacing shown in chart.
Add additional track brackets as required to satisfy fastener spacing in these charts.
8" CMU block walls shall be filled with minimum 2000 psi grout or concrete
and shall be of sufficient strength to resist loads.
Calculation reference: ITW Ramset/ Redhead data, DASMA TDS-161a.

ALLOWABLE LOAD PER SCREW	1481#	942#	147#
Embedment	2-1/2"	2-1/4"	2-1/4"
Edge distance	4"	4"	2-1/2"

DOOR WIDTH (feet and inches) at a given DESIGN PRESSURE (PSF)																						ATTACHMENT SPACING (inches)		
16.9psf	18.3psf	20psf	22psf	24.5psf	27.5psf	30psf	31.5psf	34.5psf	36.7psf	39.3psf	41.5psf	43psf	46.9psf	52.5psf	56.5psf	61.2psf	66.8psf	73.5psf	81.5psf	88psf	95.8psf	1/2	5/16	1/4
9'-5"	8'-8"	8'-0"	7'-3"	6'-6"	5'-9"	5'-4"	5'-1"	n/a	n/a	n/a	n/a	n/a	n/a	n/a	n/a	n/a	n/a	n/a	n/a	n/a	n/a	36	36	22
9'-11"	9'-1"	8'-4"	7'-7"	6'-10"	6'-1"	5'-7"	5'-4"	n/a	n/a	n/a	n/a	n/a	n/a	n/a	n/a	n/a	n/a	n/a	n/a	n/a	n/a	36	36	21
10'-5"	9'-7"	8'-9"	8'-0"	7'-2"	6'-4"	5'-10"	5'-7"	5'-1"	n/a	n/a	n/a	n/a	n/a	n/a	n/a	n/a	n/a	n/a	n/a	n/a	n/a	36	36	20
10'-11"	10'-1"	9'-3"	8'-5"	7'-6"	6'-9"	6'-2"	5'-10"	5'-4"	5'-0"	n/a	n/a	n/a	n/a	n/a	n/a	n/a	n/a	n/a	n/a	n/a	n/a	36	36	19
11'-7"	10'-8"	9'-9"	8'-10"	8'-0"	7'-1"	6'-6"	6'-2"	5'-8"	5'-4"	n/a	n/a	n/a	n/a	n/a	n/a	n/a	n/a	n/a	n/a	n/a	n/a	36	36	18
12'-3"	11'-3"	10'-4"	9'-5"	8'-5"	7'-6"	6'-11"	6'-7"	6'-0"	5'-7"	5'-3"	5'-0"	n/a	n/a	n/a	n/a	n/a	n/a	n/a	n/a	n/a	n/a	36	36	17
13'-0"	12'-0"	11'-0"	10'-0"	9'-0"	8'-0"	7'-4"	7'-0"	6'-4"	6'-0"	5'-7"	5'-3"	5'-1"	n/a	n/a	n/a	n/a	n/a	n/a	n/a	n/a	n/a	36	36	16
13'-11"	12'-9"	11'-9"	10'-8"	9'-7"	8'-6"	7'-10"	7'-5"	6'-9"	6'-4"	5'-11"	5'-8"	5'-5"	5'-0"	n/a	n/a	n/a	n/a	n/a	n/a	n/a	n/a	36	36	15
14'-10"	13'-8"	12'-7"	11'-5"	10'-3"	9'-1"	8'-4"	8'-0"	7'-3"	6'-10"	6'-4"	6'-0"	5'-10"	5'-4"	n/a	n/a	n/a	n/a	n/a	n/a	n/a	n/a	36	36	14
16'-0"	14'-9"	13'-6"	12'-4"	11'-0"	9'-10"	9'-0"	8'-7"	7'-10"	7'-4"	6'-10"	6'-6"	6'-3"	5'-9"	5'-2"	n/a	n/a	n/a	n/a	n/a	n/a	n/a	36	36	13
17'-4"	16'-0"	14'-8"	13'-4"	12'-0"	10'-8"	9'-9"	9'-4"	8'-6"	8'-0"	7'-5"	7'-1"	6'-10"	6'-3"	5'-7"	5'-2"	n/a	n/a	n/a	n/a	n/a	n/a	36	36	12
18'-11"	17'-5"	16'-0"	14'-6"	13'-1"	11'-7"	10'-8"	10'-2"	9'-3"	8'-8"	8'-1"	7'-8"	7'-5"	6'-10"	6'-1"	5'-8"	5'-2"	n/a	n/a	n/a	n/a	n/a	36	36	11
20'-10"	19'-2"	17'-7"	16'-0"	14'-4"	12'-9"	11'-9"	11'-2"	10'-2"	9'-7"	8'-11"	8'-6"	8'-2"	7'-6"	6'-8"	6'-2"	5'-9"	5'-3"	n/a	n/a	n/a	n/a	36	36	10
23'-2"	21'-4"	19'-7"	17'-9"	16'-0"	14'-3"	13'-0"	12'-5"	11'-4"	10'-8"	9'-11"	9'-5"	9'-1"	8'-4"	7'-5"	6'-11"	6'-4"	5'-10"	5'-4"	n/a	n/a	n/a	36	36	9
26'-1"	24'-0"	22'-0"	20'-0"	18'-0"	16'-0"	14'-8"	14'-0"	12'-9"	12'-0"	11'-2"	10'-7"	10'-3"	9'-4"	8'-4"	7'-9"	7'-2"	6'-7"	6'-0"	5'-4"	5'-0"	n/a	36	36	8
n/a	27'-5"	25'-2"	22'-10"	20'-6"	18'-3"	16'-9"	16'-0"	14'-7"	13'-8"	12'-9"	12'-1"	11'-8"	10'-8"	9'-7"	8'-11"	8'-2"	7'-6"	6'-10"	6'-2"	5'-8"	5'-3"	36	36	7
n/a	n/a	n/a	26'-8"	24'-0"	21'-4"	19'-7"	18'-8"	17'-0"	16'-0"	14'-11"	14'-2"	13'-8"	12'-6"	11'-2"	10'-4"	9'-7"	8'-9"	8'-0"	7'-2"	6'-8"	6'-1"	36	36	6
n/a	n/a	n/a	n/a	25'-8"	22'-10"	21'-0"	20'-0"	18'-3"	17'-1"	16'-0"	15'-2"	14'-7"	13'-5"	12'-0"	11'-1"	10'-3"	9'-5"	8'-6"	7'-8"	7'-1"	6'-6"	36	36	5
n/a	n/a	n/a	n/a	26'-2"	23'-3"	21'-4"	20'-4"	18'-7"	17'-5"	16'-3"	15'-5"	14'-11"	13'-8"	12'-2"	11'-4"	10'-5"	9'-7"	8'-8"	7'-10"	7'-3"	6'-8"	36	35	5
n/a	n/a	n/a	n/a	27'-2"	24'-2"	22'-2"	21'-1"	19'-3"	18'-1"	16'-11"	16'-0"	15'-5"	14'-2"	12'-8"	11'-9"	10'-10"	9'-11"	9'-0"	8'-2"	7'-6"	6'-11"	36	34	5
n/a	n/a	n/a	n/a	n/a	25'-1"	23'-0"	21'-11"	20'-0"	18'-10"	17'-7"	16'-8"	16'-1"	14'-8"	13'-2"	12'-2"	11'-3"	10'-4"	9'-4"	8'-5"	7'-10"	7'-2"	36	33	5
n/a	n/a	n/a	n/a	n/a	25'-7"	23'-6"	22'-4"	20'-5"	19'-2"	17'-11"	17'-0"	16'-4"	15'-0"	13'-5"	12'-5"	11'-6"	10'-6"	9'-7"	8'-7"	8'-0"	7'-4"	36	32	5
n/a	n/a	n/a	n/a	n/a	26'-8"	24'-6"	23'-4"	21'-3"	20'-0"	18'-8"	17'-8"	17'-1"	15'-8"	14'-0"	13'-0"	12'-0"	11'-0"	10'-0"	9'-0"	8'-4"	7'-8"	36	31	4
n/a	n/a	n/a	n/a	n/a	27'-3"	25'-0"	23'-9"	21'-9"	20'-5"	19'-1"	18'-1"	17'-5"	16'-0"	14'-3"	13'-3"	12'-3"	11'-2"	10'-2"	9'-2"	8'-6"	7'-10"	36	30	4
n/a	n/a	n/a	n/a	n/a	n/a	26'-1"	24'-10"	22'-8"	21'-4"	19'-11"	18'-10"	18'-2"	16'-8"	14'-11"	13'-10"	12'-9"	11'-8"	10'-7"	9'-7"	8'-10"	8'-2"	36	29	4
n/a	n/a	n/a	n/a	n/a	n/a	26'-8"	25'-5"	23'-2"	21'-10"	20'-4"	19'-3"	18'-7"	17'-1"	15'-3"	14'-2"	13'-1"	12'-0"	10'-10"	9'-10"	9'-1"	8'-4"	36	28	4
n/a	n/a	n/a	n/a	n/a	n/a	28'-0"	26'-7"	24'-4"	22'-10"	21'-4"	20'-2"	19'-6"	17'-10"	16'-0"	14'-10"	13'-8"	12'-6"	11'-5"	10'-3"	9'-6"	8'-9"	36	27	4
n/a	n/a	n/a	n/a	n/a	n/a	n/a	27'-3"	24'-11"	23'-5"	21'-10"	20'-8"	20'-0"	18'-4"	16'-4"	15'-2"	14'-0"	12'-10"	11'-8"	10'-6"	9'-9"	8'-11"	36	26	4
n/a	n/a	n/a	n/a	n/a	n/a	n/a	n/a	26'-2"	24'-7"	23'-0"	21'-9"	21'-0"	19'-3"	17'-2"	16'-0"	14'-9"	13'-6"	12'-3"	11'-1"	10'-3"	9'-5"	36	25	n/a
n/a	n/a	n/a	n/a	n/a	n/a	n/a	n/a	27'-7"	25'-11"	24'-3"	22'-11"	22'-2"	20'-3"	18'-1"	16'-10"	15'-6"	14'-3"	12'-11"	11'-8"	10'-10"	9'-11"	36	24	n/a
n/a	n/a	n/a	n/a	n/a	n/a	n/a	n/a	n/a	26'-8"	24'-11"	23'-7"	22'-9"	20'-10"	18'-8"	17'-4"	16'-0"	14'-8"	13'-3"	12'-0"	11'-1"	10'-2"	36	23	n/a
n/a	n/a	n/a	n/a	n/a	n/a	n/a	n/a	n/a	n/a	26'-4"	25'-0"	24'-1"	22'-1"	19'-9"	18'-4"	16'-11"	15'-6"	14'-1"	12'-8"	11'-9"	10'-9"	34	22	n/a
n/a	n/a	n/a	n/a	n/a	n/a	n/a	n/a	n/a	n/a	27'-2"	25'-9"	24'-10"	22'-9"	20'-4"	18'-11"	17'-5"	16'-0"	14'-6"	13'-1"	12'-1"	11'-1"	33	21	n/a
n/a	n/a	n/a	n/a	n/a	n/a	n/a	n/a	n/a	n/a	n/a	27'-5"	26'-5"	24'-3"	21'-8"	20'-1"	18'-7"	17'-0"	15'-5"	13'-11"	12'-11"	11'-10"	31	20	n/a
n/a	n/a	n/a	n/a	n/a	n/a	n/a	n/a	n/a	n/a	n/a	n/a	27'-4"	25'-0"	22'-4"	20'-9"	19'-2"	17'-7"	16'-0"	14'-5"	13'-4"	12'-3"	29	19	n/a
n/a	n/a	n/a	n/a	n/a	n/a	n/a	n/a	n/a	n/a	n/a	n/a	n/a	26'-10"	24'-0"	22'-3"	20'-7"	18'-10"	17'-1"	15'-5"	14'-3"	13'-1"	28	18	n/a
n/a	n/a	n/a	n/a	n/a	n/a	n/a	n/a	n/a	n/a	n/a	n/a	n/a	27'-10"	24'-10"	23'-1"	21'-4"	19'-6"	17'-9"	16'-0"	14'-10"	13'-7"	26	17	n/a
n/a	n/a	n/a	n/a	n/a	n/a	n/a	n/a	n/a	n/a	n/a	n/a	n/a	n/a	26'-10"	24'-11"	23'-0"	21'-1"	19'-2"	17'-3"	16'-0"	14'-8"	25	16	n/a
n/a	n/a	n/a	n/a	n/a	n/a	n/a	n/a	n/a	n/a	n/a	n/a	n/a	n/a	n/a	27'-1"	25'-0"	22'-11"	20'-10"	18'-9"	17'-5"	16'-0"	23	15	n/a
n/a	n/a	n/a	n/a	n/a	n/a	n/a	n/a	n/a	n/a	n/a	n/a	n/a	n/a	n/a	n/a	26'-2"	24'-0"	21'-9"	19'-8"	18'-2"	16'-8"	22	14	n/a
n/a	n/a	n/a	n/a	n/a	n/a	n/a	n/a	n/a	n/a	n/a	n/a	n/a	n/a	n/a	n/a	n/a	26'-4"	24'-0"	21'-7"	20'-0"	18'-4"	20	13	n/a
n/a	n/a	n/a	n/a	n/a	n/a	n/a	n/a	n/a	n/a	n/a	n/a	n/a	n/a	n/a	n/a	n/a	27'-9"	25'-3"	22'-9"	21'-1"	19'-4"	18	12	n/a
n/a	n/a	n/a	n/a	n/a	n/a	n/a	n/a	n/a	n/a	n/a	n/a	n/a	n/a	n/a	n/a	n/a	n/a	n/a	25'-5"	23'-6"	21'-7"	17	11	n/a
n/a	n/a	n/a	n/a	n/a	n/a	n/a	n/a	n/a	n/a	n/a	n/a	n/a	n/a	n/a	n/a	n/a	n/a	n/a	27'-0"	25'-0"	23'-0"	15	10	n/a
n/a	n/a	n/a	n/a	n/a	n/a	n/a	n/a	n/a	n/a	n/a	n/a	n/a	n/a	n/a	n/a	n/a	n/a	n/a	n/a	n/a	26'-3"	14	9	n/a
16.9psf	18.3psf	20psf	22psf	24.5psf	27.5psf	30psf	31.5psf	34.5psf	36.7psf	39.3psf	41.5psf	43psf	46.9psf	52.5psf	56.5psf	61.2psf	66.8psf	73.5psf	81.5psf	88psf	95.8psf	1/2	5/16	1/4
DOOR WIDTH (feet and inches) at a given DESIGN PRESSURE (PSF)																						ATTACHMENT SPACING (inches)		

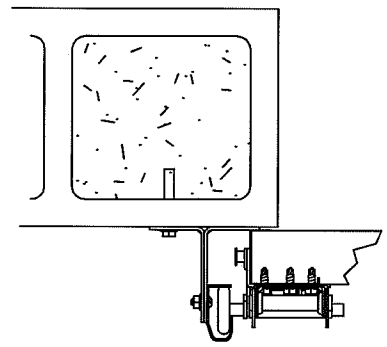

Alternative design may be approved by a registered professional engineer.

Supporting structural elements shall be designed by a registered professional engineer for wind loads in addition to other loads.

This drawing does not address the jamb/wall design, but only door attachment. Jamb/wall construction is shown only for illustration purposes. The building designer is responsible for ensuring that the jamb/wall is sufficient to carry the door live and static loads.

Professional Engineer's seal provided only for verification of windload construction details

John E. Scates, P.E.
3121 Fairgate Drive
Carrollton, Texas 75007
TXPE 56308, F-2203

C.H.I. OVERHEAD DOORS

SCALE none

DATE 7-11-2011

CMU Block Wall Attachment Detail

C.H.I. Drawing: BJA-104-02

Anchor: ITW Ramset/ Redhead Tapcon, with washer that conforms to ANSI B18.22.1 type B.
ITW Ramset/ Redhead Tapcon XL, 1/4" diameter (with 13/16" diameter washer). Lesser spacing used to avoid interference with door component system must not be less than 4".
ITW Ramset/ Redhead Tapcon XL, 3/8" diameter (with 13/16" diameter washer). Lesser spacing used to avoid interference with door component system must not be less than 6".
ITW Ramset/ Redhead Large Diameter Tapcon, 1/2" diameter (with 1" diameter washer). Lesser spacing used to avoid interference with door component system must not be less than 8".
See chart for minimum edge distance required. Lowest anchor to be greater than the minimum edge distance up from the floor and less than 10-inches from the floor.
Load per jamb = 0.5 x door width x max positive pressure x door height
These charts do not address spring pad connections to the building.
Maximum spacing shown in chart.
Add additional track brackets as required to satisfy fastener spacing in these charts.
Concrete walls shall be minimum 2000 psi concrete and shall be of sufficient strength to resist loads.
Calculation reference: ITW Ramset/ Redhead data, DASMA TDS-161a.

ALLOWABLE LOAD PER SCREW	1813#	933#	505#
Embedment	3-1/2"	2-1/2"	1-3/4"
Edge distance	3"	3"	2-1/2"
	ATTACHMENT SPACING (inches)		

20psf	22psf	24.5psf	27.5psf	31.5psf	32.9psf	34.3psf	36psf	37.8psf	41.1psf	43psf	46.7psf	51.8psf	56psf	61psf	66.4psf	73.4psf	82.3psf	87psf	93.5psf	1/2	3/8	1/4
25'-3"	22'-11"	20'-7"	18'-4"	16'-0"	15'-4"	14'-8"	14'-0"	13'-4"	12'-3"	11'-8"	10'-9"	9'-8"	9'-0"	8'-3"	7'-7"	6'-10"	6'-1"	5'-9"	5'-4"	36	36	24
26'-4"	23'-11"	21'-6"	19'-1"	16'-8"	16'-0"	15'-3"	14'-7"	13'-11"	12'-9"	12'-3"	11'-3"	10'-1"	9'-4"	8'-7"	7'-11"	7'-2"	6'-4"	6'-0"	5'-7"	36	36	23
27'-6"	25'-0"	22'-5"	20'-0"	17'-5"	16'-8"	16'-0"	15'-3"	14'-6"	13'-4"	12'-9"	11'-9"	10'-7"	9'-10"	9'-0"	8'-3"	7'-6"	6'-8"	6'-3"	5'-10"	36	36	22
n/a	26'-2"	23'-6"	20'-11"	18'-3"	17'-6"	16'-9"	16'-0"	15'-2"	14'-0"	13'-5"	12'-4"	11'-1"	10'-3"	9'-5"	8'-8"	7'-10"	7'-0"	6'-7"	6'-2"	36	36	21
n/a	27'-6"	24'-8"	22'-0"	19'-2"	18'-4"	17'-7"	16'-9"	16'-0"	14'-8"	14'-1"	12'-11"	11'-8"	10'-9"	9'-11"	9'-1"	8'-3"	7'-4"	6'-11"	6'-5"	36	36	20
n/a	n/a	26'-2"	23'-3"	20'-3"	19'-5"	18'-7"	17'-9"	16'-11"	15'-6"	14'-10"	13'-8"	12'-4"	11'-5"	10'-6"	9'-7"	8'-8"	7'-9"	7'-4"	6'-10"	36	35	18
n/a	n/a	26'-10"	23'-11"	20'-10"	20'-0"	19'-1"	18'-3"	17'-4"	16'-0"	15'-3"	14'-1"	12'-8"	11'-9"	10'-9"	9'-10"	8'-11"	7'-11"	7'-6"	7'-0"	36	34	18
n/a	n/a	27'-7"	24'-7"	21'-5"	20'-6"	19'-8"	18'-9"	17'-10"	16'-5"	15'-8"	14'-5"	13'-0"	12'-1"	11'-1"	10'-2"	9'-2"	8'-2"	7'-9"	7'-2"	36	33	17
n/a	n/a	n/a	25'-5"	22'-2"	21'-3"	20'-4"	19'-5"	18'-6"	17'-0"	16'-3"	14'-11"	13'-6"	12'-6"	11'-5"	10'-6"	9'-6"	8'-6"	8'-0"	7'-5"	36	32	17
n/a	n/a	n/a	26'-2"	22'-10"	21'-11"	20'-11"	20'-0"	19'-0"	17'-6"	16'-9"	15'-5"	13'-10"	12'-10"	11'-9"	10'-10"	9'-9"	8'-9"	8'-3"	7'-8"	36	31	16
n/a	n/a	n/a	27'-2"	23'-8"	22'-8"	21'-9"	20'-8"	19'-9"	18'-2"	17'-4"	16'-0"	14'-5"	13'-4"	12'-3"	11'-3"	10'-2"	9'-1"	8'-7"	7'-11"	36	30	16
n/a	n/a	n/a	n/a	24'-5"	23'-5"	22'-5"	21'-4"	20'-4"	18'-9"	17'-11"	16'-6"	14'-10"	13'-9"	12'-7"	11'-7"	10'-6"	9'-4"	8'-10"	8'-3"	36	29	15
n/a	n/a	n/a	n/a	25'-3"	24'-2"	23'-2"	22'-1"	21'-0"	19'-4"	18'-6"	17'-0"	15'-4"	14'-2"	13'-0"	11'-11"	10'-10"	9'-8"	9'-1"	8'-6"	36	28	15
n/a	n/a	n/a	n/a	26'-3"	25'-2"	24'-1"	23'-0"	21'-11"	20'-2"	19'-3"	17'-9"	16'-0"	14'-9"	13'-7"	12'-5"	11'-3"	10'-0"	9'-6"	8'-10"	36	27	14
n/a	n/a	n/a	n/a	27'-2"	26'-1"	25'-0"	23'-10"	22'-8"	20'-10"	19'-11"	18'-4"	16'-6"	15'-4"	14'-0"	12'-11"	11'-8"	10'-5"	9'-10"	9'-2"	36	26	14
n/a	n/a	n/a	n/a	n/a	27'-3"	26'-1"	24'-10"	23'-8"	21'-9"	20'-10"	19'-2"	17'-3"	16'-0"	14'-8"	13'-6"	12'-2"	10'-10"	10'-3"	9'-7"	36	25	13
n/a	n/a	n/a	n/a	n/a	n/a	27'-1"	25'-10"	24'-7"	22'-7"	21'-8"	19'-11"	17'-11"	16'-7"	15'-3"	14'-0"	12'-8"	11'-3"	10'-8"	9'-11"	36	24	13
n/a	n/a	n/a	n/a	n/a	n/a	n/a	27'-1"	25'-9"	23'-8"	22'-8"	20'-10"	18'-10"	17'-5"	16'-0"	14'-8"	13'-3"	11'-10"	11'-2"	10'-5"	36	23	12
n/a	n/a	n/a	n/a	n/a	n/a	n/a	n/a	26'-10"	24'-8"	23'-8"	21'-9"	19'-7"	18'-2"	16'-8"	15'-3"	13'-10"	12'-4"	11'-8"	10'-10"	36	22	11
n/a	n/a	n/a	n/a	n/a	n/a	n/a	n/a	n/a	25'-9"	24'-8"	22'-8"	20'-6"	18'-11"	17'-4"	15'-11"	14'-5"	12'-10"	12'-2"	11'-4"	36	21	11
n/a	n/a	n/a	n/a	n/a	n/a	n/a	n/a	n/a	27'-3"	26'-1"	24'-0"	21'-7"	20'-0"	18'-4"	16'-10"	15'-3"	13'-7"	12'-10"	11'-11"	36	20	10
n/a	n/a	n/a	n/a	n/a	n/a	n/a	n/a	n/a	n/a	27'-4"	25'-2"	22'-8"	21'-0"	19'-3"	17'-8"	16'-0"	14'-3"	13'-6"	12'-6"	36	19	10
n/a	n/a	n/a	n/a	n/a	n/a	n/a	n/a	n/a	n/a	n/a	26'-8"	24'-1"	22'-3"	20'-5"	18'-9"	17'-0"	15'-2"	14'-4"	13'-4"	35	18	9
n/a	n/a	n/a	n/a	n/a	n/a	n/a	n/a	n/a	n/a	n/a	27'-3"	24'-7"	22'-9"	20'-10	19'-2"	17'-4"	15'-5"	14'-7"	13'-7"	34	18	9
n/a	n/a	n/a	n/a	n/a	n/a	n/a	n/a	n/a	n/a	n/a	n/a	25'-4"	23'-6"	21'-6"	19'-9"	17'-11"	15'-11"	15'-1"	14'-1"	33	17	9
n/a	n/a	n/a	n/a	n/a	n/a	n/a	n/a	n/a	n/a	n/a	n/a	26'-3"	24'-3"	22'-3"	20'-5"	18'-6"	16'-6"	15'-7"	14'-6"	32	17	8
n/a	n/a	n/a	n/a	n/a	n/a	n/a	n/a	n/a	n/a	n/a	n/a	27'-2"	25'-1"	23'-0"	21'-2"	19'-2"	17'-1"	16'-2"	15'-0"	31	16	8
n/a	n/a	n/a	n/a	n/a	n/a	n/a	n/a	n/a	n/a	n/a	n/a	27'-9"	25'-9"	23'-7"	21'-8"	19'-7"	17'-6"	16'-7"	15'-5"	30	15	8
n/a	n/a	n/a	n/a	n/a	n/a	n/a	n/a	n/a	n/a	n/a	n/a	n/a	26'-8"	24'-6"	22'-6"	20'-4"	18'-2"	17'-2"	15'-11"	29	15	8
n/a	n/a	n/a	n/a	n/a	n/a	n/a	n/a	n/a	n/a	n/a	n/a	n/a	27'-8"	25'-5"	23'-4"	21'-2"	18'-10"	17'-10"	16'-7"	28	14	7
n/a	n/a	n/a	n/a	n/a	n/a	n/a	n/a	n/a	n/a	n/a	n/a	n/a	n/a	26'-5"	24'-3"	22'-0"	19'-7"	18'-6"	17'-3"	27	14	7
n/a	n/a	n/a	n/a	n/a	n/a	n/a	n/a	n/a	n/a	n/a	n/a	n/a	n/a	27'-6"	25'-3"	22'-11"	20'-5"	19'-4"	17'-11"	26	13	7
n/a	n/a	n/a	n/a	n/a	n/a	n/a	n/a	n/a	n/a	n/a	n/a	n/a	n/a	n/a	26'-0"	23'-7"	21'-0"	19'-10"	18'-6"	25	13	7
n/a	n/a	n/a	n/a	n/a	n/a	n/a	n/a	n/a	n/a	n/a	n/a	n/a	n/a	n/a	27'-2"	24'-7"	21'-11"	20'-9"	19'-4"	24	12	6
n/a	n/a	n/a	n/a	n/a	n/a	n/a	n/a	n/a	n/a	n/a	n/a	n/a	n/a	n/a	n/a	25'-9"	22'-11"	21'-9"	20'-2"	23	12	6
n/a	n/a	n/a	n/a	n/a	n/a	n/a	n/a	n/a	n/a	n/a	n/a	n/a	n/a	n/a	n/a	27'-0"	24'-1"	22'-10"	21'-2"	22	11	6
n/a	n/a	n/a	n/a	n/a	n/a	n/a	n/a	n/a	n/a	n/a	n/a	n/a	n/a	n/a	n/a	n/a	25'-4"	24'-0"	22'-4"	21	11	6
n/a	n/a	n/a	n/a	n/a	n/a	n/a	n/a	n/a	n/a	n/a	n/a	n/a	n/a	n/a	n/a	n/a	26'-3"	24'-10"	23'-1"	20	10	6
n/a	n/a	n/a	n/a	n/a	n/a	n/a	n/a	n/a	n/a	n/a	n/a	n/a	n/a	n/a	n/a	n/a	27'-9"	26'-3"	24'-5"	19	10	5
20psf	22psf	24.5psf	27.5psf	31.5psf	32.9psf	34.3psf	36psf	37.8psf	41.1psf	43psf	46.7psf	51.8psf	56psf	61psf	66.4psf	73.4psf	82.3psf	87psf	93.5psf	1/2	3/8	1/4
																				ATTACHMENT SPACING (inches)		

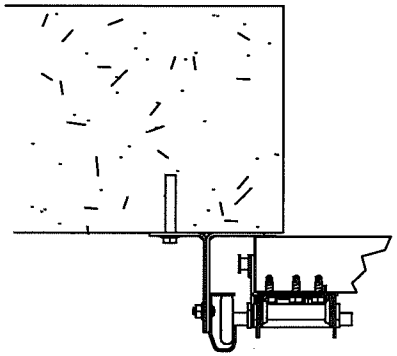

Alternative design may be approved by a registered professional engineer.

Supporting structural elements shall be designed by a registered professional engineer for wind loads in addition to other loads.

This drawing does not address the jamb/wall design, but only door attachment. Jamb/wall construction is shown only for illustration purposes. The building designer is responsible for ensuring that the jamb/wall is sufficient to carry the door live and static loads.

Professional Engineer's seal provided only for verification of windload construction details

John E. Scates, P.E.
3121 Fairgate Drive
Carrollton, Texas 75007
TXPE 56308, F-2203

C.H.I. OVERHEAD DOORS

SCALE none

DATE 7-11-2011

Concrete Wall Attachment Detail

C.H.I. Drawing: BJA-105-01