NOTES:

1. GLAZING OPTION – .125" MINIMUM DSB GLAZING IN MOLDED FRAMES SCREWED TOGETHER IN TOP SECTION ONLY (WITH OR WITHOUT DECORATIVE INSERTS) MEETS UNIFORM STATIC DESIGN PRESSURES SHOWN ON THIS DRAWING. FOR THE VERTICAL RAISED PANEL GLAZING SHALL HAVE A DAYLIGHT OPENING OF 9.25" X 16" AND A MINIMUM OF (8) #8x1" SCREWS (2X ALONG THE HORIZONTAL AND 2X ALONG THE VERTICAL) AND FOR THE HORIZONTAL RAISED PANEL GLAZING SHALL HAVE A DAYLIGHT OPENING OF 21.5" X 6.25" AND A MINIMUM OF (8) #8x1" SCREWS (3X ALONG THE HORIZONTAL AND 1X ALONG THE VERTICAL). GLAZING IS NOT IMPACT RESISTANT AND DOES NOT MEET THE REQUIREMENTS FOR WIND–BORNE DEBRIS REGION.

2. VINYL OR WOOD DOOR STOP NAILED A MAXIMUM OF 6" O.C. MUST OVERLAP TOP AND BOTH ENDS OF PANELS MINIMUM 7/16" TO MEET NEGATIVE PRESSURES.

3. SLIDE LOCK REQUIRED.

4. SECTION SHALL BE CONSTRUCTED WITH FOAMED IN PLACE POLYURETHANE FOAM INSULATION CHEMICALLY BONDED TO A MINIMUM .070" FIBERGLASS FACER AND 27 GA STEEL BACKER.

5. THE DESIGN OF THE SUPPORTING STRUCTURAL ELEMENTS SHALL BE THE RESPONSIBILITY OF THE PROFESSIONAL OF RECORD FOR THE BUILDING OR STRUCTURE AND IN ACCORDANCE WITH CURRENT BUILDING CODES FOR THE LOADS LISTED ON THIS DRAWING.

6. DOOR JAMB TO BE MINIMUM 2x4 STRUCTURAL GRADE LUMBER. REFER TO JAMB CONNECTION SUPPLEMENT FOR ATTACHMENT TO SUPPORTING STRUCTURE.

7. SECTION SHALL HAVE A 5" 25 GA STEEL BACKUP PLATE ACROSS THE TOP OF EACH SECTION.

8. FOR LOW HEAD ROOM LIFT CONDITIONS, TOP BRACKET SHALL BE A 13 GA LHR 7/4 TOP BRACKET WITH A MINIMUM OF (3) 1/4–14x7/8" SELF DRILLING CRIMPTITE SCREWS IN LIEU OF THE BRACKET SHOWN ON THIS DRAWING. U–BAR ON TOP SECTION SHALL BE INSTALLED ON TOP OF LHR TOP BRACKETS.

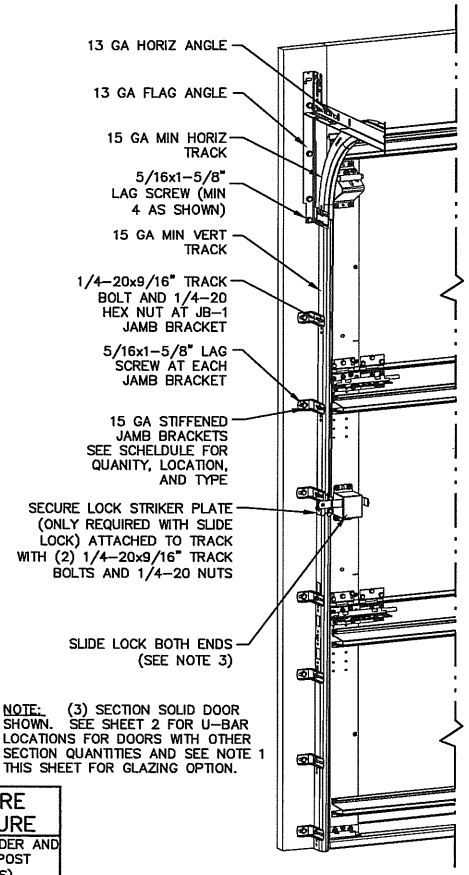

NOTE: (3) SECTION SOLID DOOR SHOWN. SEE SHEET 2 FOR U–BAR LOCATIONS FOR DOORS WITH OTHER SECTION QUANTITIES AND SEE NOTE 1 THIS SHEET FOR GLAZING OPTION.

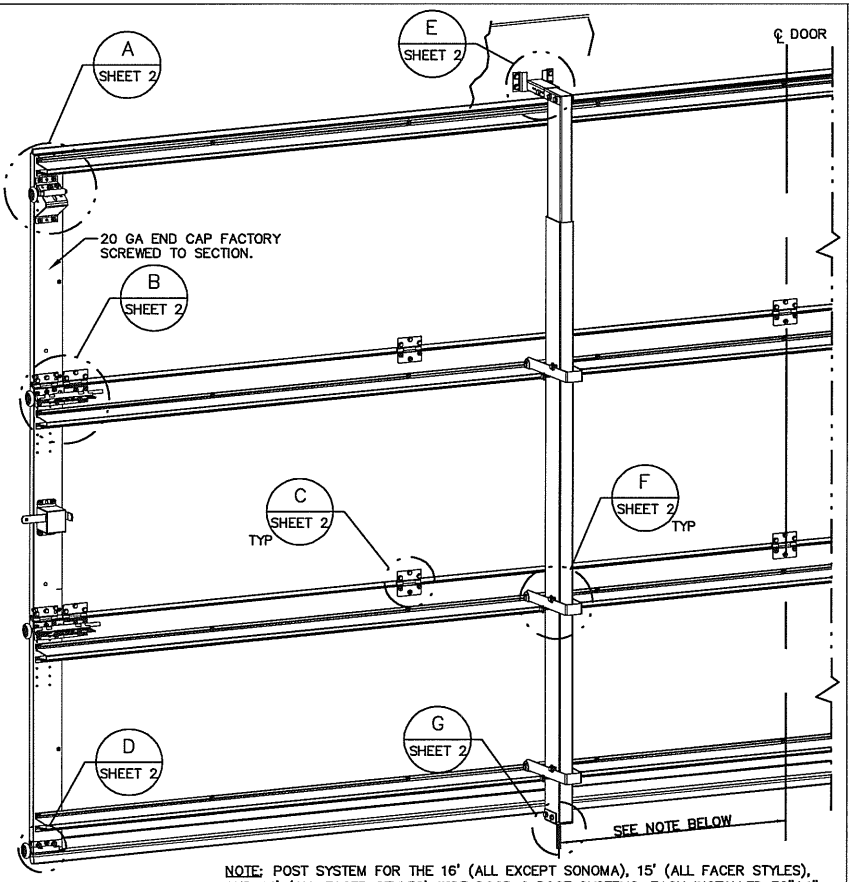

NOTE: POST SYSTEM FOR THE 16' (ALL EXCEPT SONOMA), 15' (ALL FACER STYLES), AND 14' (ALL FACER STYLES) WIDE DOOR 2 POST SYSTEMS, EACH INSTALLED 32"±1" DISTANCE FROM THE CENTERLINE OF THE DOOR. POST SYSTEM FOR THE 16' (SONOMA FACER) WIDE DOOR REQUIRES 3 POSTS, ONE LOCATED AT THE CENTERLINE OF THE DOOR AND EACH ADDTIONAL LOCATED AT 48"±1" DISTANCE FROM THE CENTERLINE OF THE DOOR. POST SYSTEM FOR THE 12' (ALL FACER EXCEPT SONOMA) WIDE DOOR IS TO BE INSTALLED 36"±1" DISTANCE FROM THE CENTERLINE OF THE DOOR. POST SYSTEM FOR THE 12' (SONOMA FACER) WIDE DOOR IS TO INSTALLED 24"±1" DISTANCE FROM THE CENTERLINE OF THE DOOR. A SINGLE POST SYSTEM IS TO BE INSTALLED ON THE CENTERLINE OF THE DOOR FOR 10' (ALL FACER STYLES) DOOR WIDTHS. SEE WINDLOAD POST INSTALLATION INSTRUCTIONS.

REVISIONS

SUPERIMPOSED DESIGN PRESSURE LOADS ON SUPPORTING STRUCTURE

MAX DOOR WIDTH	MAX DOOR HEIGHT	UNIFORM LOAD EACH JAMB (PLF)	POINT LOAD AT HEADER AND SLAB AT EACH POST LOCATION (LBS)
10'–0"	7'–0"	+172.0/–191.5	+788.3/–877.7
	8'–0"	+172.0/–191.5	+895.8/–997.4
12'–0"	7'–0"	+206.4/–229.8	+674.1/–750.5
	8'–0"	+206.4/–229.8	+766.0/–852.8
14'–0"	7'–0"	+240.8/–268.1	+678.3/–755.3
	8'–0"	+240.8/–268.1	+770.8/–858.3
15'–0"	7'–0"	+258.0/–287.3	+708.4/–788.8
	8'–0"	+258.0/–287.3	+805.1/–896.3
16'–0"	7'–0"	+275.2/–306.4	+740.0/–823.9
	8'–0"	+275.2/–306.4	+840.9/–936.2

JAMB BRACKET SCHEDULE

DOOR HEIGHT	NO. OF SECTIONS	NO. OF JAMB BRACKETS (EACH JAMB)	LOCATION OF CENTERLINE OF JAMB BRACKETS MEASURED FROM BOTTOM OF TRACK (ALL DIMENSIONS ± 2")
7'–0"	3	7	2" (JB–1), 10" (JB–1), 21–3/4" (JB–1), 29–3/4" (JB–1), 42" (JB–1), 52–1/2" (JB–1), 63–1/4" (JB–1)
8'–0"	4	8	2" (JB–1), 10" (JB–1), 21–3/4" (JB–1), 29–3/4" (JB–1), 39" (JB–1), 48" (JB–1), 57–1/2" (JB–1), 75–1/2" (JB–1)

NOTE:
(JB–1) FOLLOWING DIMENSION DENOTES SLOTTED JAMB BRACKET ATTACHED TO TRACK WITH 1/4–20x9/16" TRACK BOLT AND NUT.

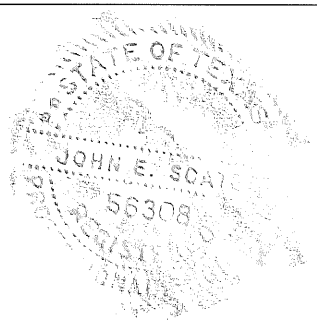

John E Scates 9/4/14

JOHN E. SCATES, PE
3121 FAIRGATE DR.
CARROLLTON, TX 75007
FL PE 51737 TX PE 56308/F2203

PROFESSIONAL ENGINEER'S SEAL PROVIDED ONLY FOR VERIFICATION OF WINDLOAD CONSTRUCTION DETAILS.

The Genuine. The Original.
OVERHEAD DOOR®

OVERHEAD DOOR CORPORATION
2501 SOUTH STATE HIGHWAY 121
SUITE 200 LEWISVILLE, TX 75067
(800) 275–3920

STATIC PRESSURE RATINGS		APPROVED SIZES		SCALE: N.T.S.		SIZE: A
DESIGN (PSF):	+34.40/–38.30	MAX WIDTH:	16'–0"		DATE	NAME
TEST (PSF):	+51.60/–57.45	MAX HEIGHT:	8'–0"	DRAWN	7/14/14	GRT
IMPACT/CYCLIC RATED (YES/NO):	NO	MAX SECTION HEIGHT:	28"	CHECKED		

MODEL 980

SHEET 1 OF 2

DRAWING PART NO. 411362

REV.

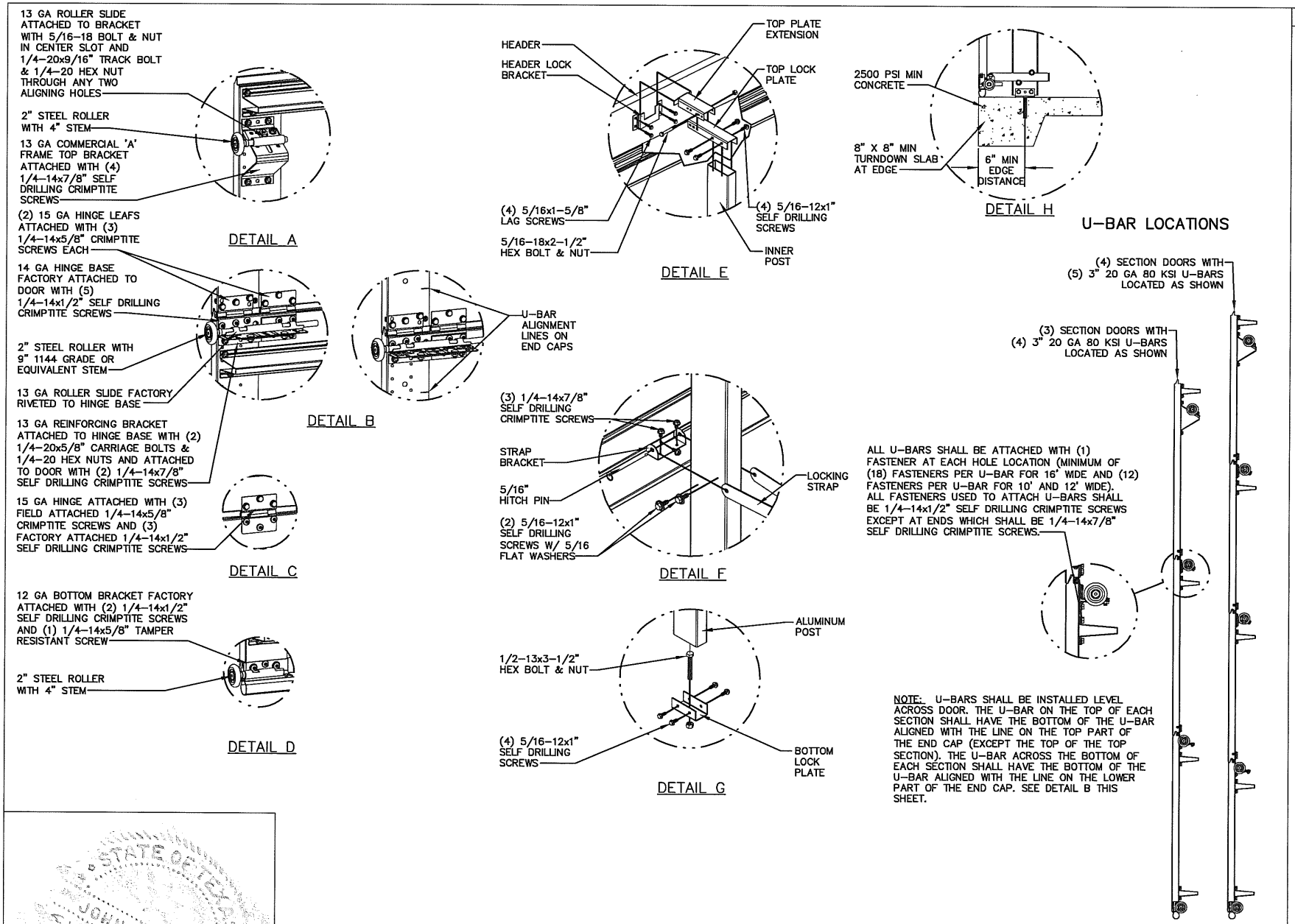

REVISIONS

STATE OF TEXAS
JOHN E. SCATES
56308
REGISTERED
PROFESSIONAL ENGINEER

John E Scates 9/4/14

JOHN E. SCATES, PE
3121 FAIRGATE DR.
CARROLLTON, TX 75007
FL PE 51737 TX PE 56308/F2203

PROFESSIONAL ENGINEER'S SEAL PROVIDED ONLY FOR VERIFICATION OF WINDLOAD CONSTRUCTION DETAILS.

The Genuine. The Original.
OVERHEAD DOOR

OVERHEAD DOOR CORPORATION
2501 SOUTH STATE HIGHWAY 121
SUITE 200 LEWISVILLE, TX 75067
(800) 275-3920

STATIC PRESSURE RATINGS		APPROVED SIZES		SCALE: N.T.S.		SIZE: A
DESIGN (PSF):	+34.40/-38.30	MAX WIDTH:	16'-0"		DATE	NAME
TEST (PSF):	+51.60/-57.45	MAX HEIGHT:	8'-0"	DRAWN	7/14/14	GRT
IMPACT/CYCLIC RATED (YES/NO):	NO	MAX SECTION HEIGHT:	28"	CHECKED		

MODEL 980

SHEET 2 OF 2

DRAWING PART NO. 411362

REV.