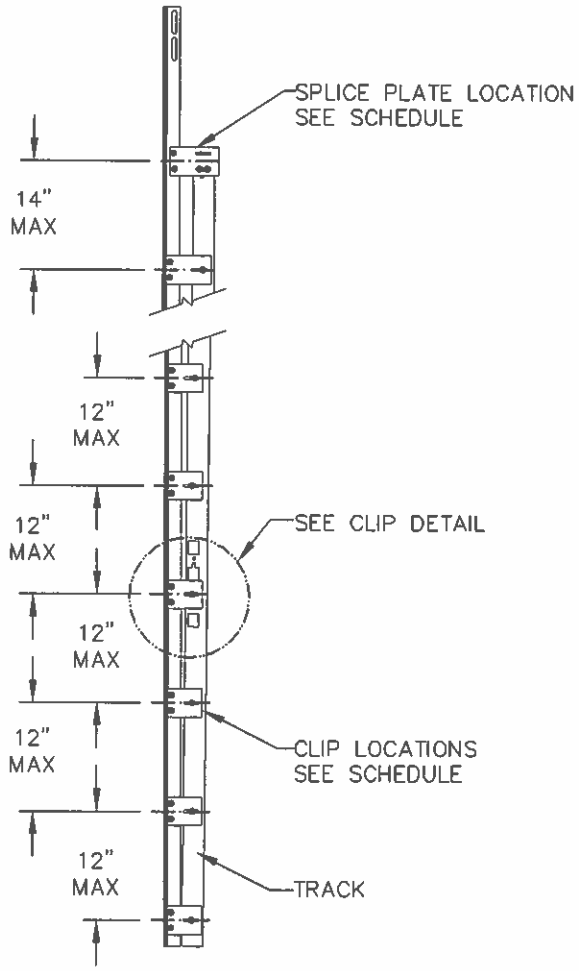

CLIPS TO BE EITHER RIVETED, BOLTED, OR WELDED. SEE DETAILS THIS PAGE.

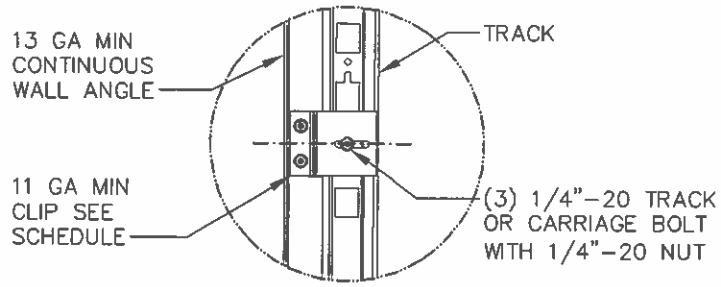

TYPICAL CLIP BOLTING DETAIL

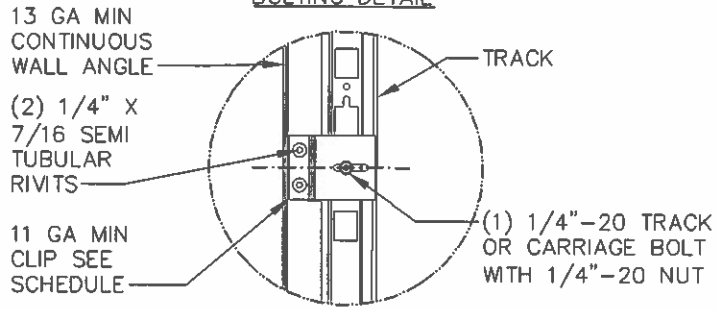

TYPICAL CLIP RIVETING DETAIL

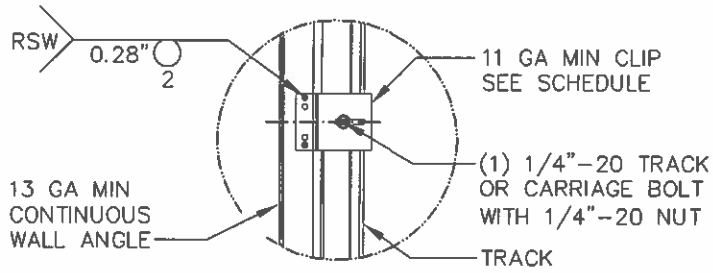

TYPICAL CLIP WELDING DETAIL

REVISIONS
P2 2 INCH TRACK-CLIPS-TEXAS WALL ANGLE 12 FOOT UPDATED BPJ 6/11/03
P3 UPDATED FORMAT. INCREASED ALLOWABLE PRESSURES TO +46.00/-52.00 PSF FOR ALL DOOR WIDTHS. CHANGED "TEXAS WALL ANGLE" TO "CONTINUOUS WALL ANGLE". ADDED SUBSTRATE MOUNTING DETAIL. CHANGED TO TITEN HD ANCHORS GRT 4/2/07
P4 CHANGED FORMAT. ADDED MODELS 9800 AND 8024 WITH OVERLAY TO TRACK CLIP SCHEDULE. GRT 8/21/07
P5 UPDATED MODELS LISTED IN CHARTS. UPDATED SPLICE & CLIP SCHEDULES. DLP 9/06/07
P6 UPDATE MOUNTING DETAIL DRAWINGS. GRT 10/05/07
P7 UPDATED CHARTS TO ELIMINATE THE USE OF THE #8 CLIP (REPLACED WITH #9 ACROSS THE BOARD). DLP 10/24/07
P8 UPDATED STEEL MOUNTING DETAIL MRB 04/11/08
P9 EXPANDED 1-1/2" TO 1-3/8" DOOR THICKNESS CHART UP TO 14' HIGH. GRT 12/11/08
P10 UPDATED TITLE BLOCK GRT 6/2/10
P11 UPDATED TITLE BLOCK. REMOVED CHART. GRT 11/15/13

Mark Sawicki
12/17/13

MARK A SAWICKI, PE
2501 S. STATE HWY 121, SUITE 200.
LEWISVILLE, TX 75067
FL PE 72613 TX PE 106291

PROFESSIONAL ENGINEER'S SEAL PROVIDED ONLY FOR VERIFICATION OF WINDLOAD CONSTRUCTION DETAILS.

STATE OF TEXAS
MARK A SAWICKI
106291
LICENSED
PROFESSIONAL ENGINEER

DESIGN PRESSURE CHART	
MAX DOOR WIDTH	MAX PSF
9'-0"	+46.0 PSF/-52.0 PSF
16'-0"	+46.0 PSF/-52.0 PSF
18'-0"	+46.0 PSF/-52.0 PSF

TRACK SUPPLEMENT CHART

Wayne® Dalton
3395 ADDISON DRIVE
PENSACOLA, FLORIDA 32514
(850) 474-9890

	DATE	NAME
DRAWN	8/21/07	GRT
CHECKED	8/21/07	MRB
SHEET 1 OF 2		
DRAWING PART NO. 307494		REV. P11

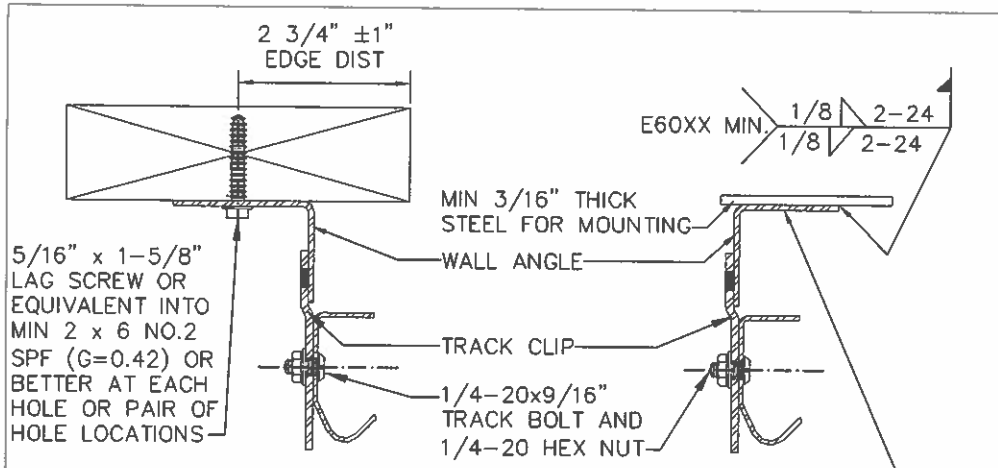

MOUNTING TO WOOD JAMB DETAIL

MOUNTING TO STEEL DETAIL

OPTIONAL: WALL ANGLE MAY BE ATTACHED TO SUPPORTING STEEL WITH MIN. (1) 1/4-20x7/8" SELF DRILLING SCREW WITH 1" O.D. WASHER AT EACH HOLE OR PAIR OF HOLE LOCATIONS IN LIEU OF WELDING

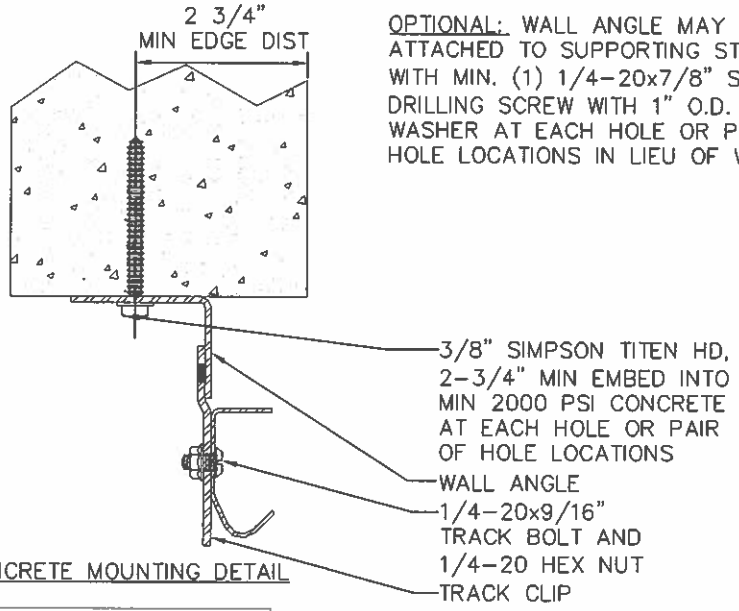

CONCRETE MOUNTING DETAIL

REVISIONS

P2 2 INCH TRACK-CLIPS-TEXAS WALL ANGLE 12 FOOT UPDATED
BPJ 6/11/03

P3 UPDATED FORMAT. INCREASED ALLOWABLE PRESSURES TO +46.00/-52.00 PSF FOR ALL DOOR WIDTHS. CHANGED "TEXAS WALL ANGLE" TO "CONTINUOUS WALL ANGLE". ADDED SUBSTRATE MOUNTING DETAIL. CHANGED TO TITEN HD ANCHORS
GRT 4/2/07

P4 CHANGED FORMAT. ADDED MODELS 9800 AND 8024 WITH OVERLAY TO TRACK CLIP SCHEDULE.
GRT 8/21/07

P5 UPDATED MODELS LISTED IN CHARTS. UPDATED SPLICE & CLIP SCHEDULES.
DLP 9/06/07

P6 UPDATE MOUNTING DETAIL DRAWINGS.
GRT 10/05/07

P7 UPDATED CHARTS TO ELIMINATE THE USE OF THE #8 CLIP (REPLACED WITH #9 ACROSS THE BOARD).
DLP 10/24/07

P8 UPDATED STEEL MOUNTING DETAIL
MRB 04/11/08

P9 EXPANDED 1-1/2" TO 1-3/8" DOOR THICKNESS CHART UP TO 14' HIGH.
GRT 12/11/08

P10 ADDED MODEL 8700. UPDATED TITLE BLOCK
GRT 6/2/10

P11 UPDATED TITLE BLOCK. REMOVED CHART.
GRT 11/15/13

Mark Sawicki
12/17/13

MARK A SAWICKI, PE
2501 S. STATE HWY 121, SUITE 200.
LEWISVILLE, TX 75067
FL PE 72613 TX PE 106291

PROFESSIONAL ENGINEER'S SEAL PROVIDED ONLY FOR VERIFICATION OF WINDLOAD CONSTRUCTION DETAILS.

STATE OF TEXAS
MARK A SAWICKI
106291
LICENSED
PROFESSIONAL ENGINEER

TRACK SUPPLEMENT CHART

Wayne® Dalton
3395 ADDISON DRIVE
PENSACOLA, FLORIDA 32514
(850) 474-9890

	DATE	NAME
DRAWN	8/21/07	GRT
CHECKED	8/21/07	MRB

SHEET 2 OF 2

DRAWING PART NO. 307494

REV. P11