NOTES:

1. IMPACT RESISTANT GLAZING OPTION – IMPACT RESISTANT GLAZING SYSTEM MAY BE INSTALLED IN TOP OR INTERMEDIATE SECTION (WITH OR WITHOUT DECORATIVE INSERTS). GLAZING SHALL BE 1/4" POLYCARBONATE. MAXIMUM GLAZING DIMENSIONS SHALL BE 14" x 46" CUTOUT. FASTENED WITH A MINIMUM #8 X 1" SMS: 3X ALONG THE HORIZONTAL AND 3X ALONG THE VERTICAL. SEE DETAIL E ON SHEET 2 FOR ASSEMBLY DETAILS.

2. NON-IMPACT RESISTANT GLAZING OPTION – .090" MINIMUM SSB GLAZING IN MOLDED FRAMES SCREWED TOGETHER WITH A MINIMUM OF (10) #8x1" SCREWS (3X ALONG THE HORIZONTAL AND 2X ALONG THE VERTICAL) INSTALLED IN TOP OR INTERMEDIATE SECTION (WITH OR WITHOUT DECORATIVE INSERTS). MEETS UNIFORM STATIC WIND PRESSURES SHOWN ON THIS DRAWING. MAXIMUM GLAZING DIMENSIONS SHALL BE 15" x 46" CUTOUT. GLAZING IS NOT IMPACT RESISTANT AND DOES NOT MEET THE REQUIREMENTS FOR WIND-BORNE DEBRIS REGIONS.

3. VINYL OR WOOD DOOR STOP NAILED A MAXIMUM OF 6" O.C. MUST OVERLAP TOP AND BOTH ENDS OF PANELS MINIMUM 7/16" TO MEET NEGATIVE PRESSURES.

4. KEY LOCK, SLIDE LOCKS, OR OPERATOR REQUIRED.

5. LOUVER OPTION – .040" MINIMUM LOUVERS IN MOLDED FRAMES SCREWED TOGETHER WITH A MINIMUM OF (10) #8x1" SCREWS (3X ALONG THE HORIZONTAL AND 2X ALONG THE VERTICAL) INSTALLED IN THE BOTTOM SECTION. MAXIMUM LOUVER DIMENSIONS SHALL BE 15" x 19" CUTOUT. LOUVERS ARE NOT IMPACT RESISTANT AND DO NOT MEET THE REQUIREMENTS FOR WIND-BORNE DEBRIS REGIONS.

6. FACER STEEL TO HAVE A MINIMUM 27 GA THICKNESS AND BACKER STEEL TO HAVE A MINIMUM 29 GA THICKNESS.

7. A 4-1/2" x 6" x 22 GA BACKER PLATE IS TO BE LOCATED AT EVERY INTERMEDIATE AND OUTER END HINGE LOCATION.

8. THE DESIGN OF THE SUPPORTING STRUCTURAL ELEMENTS SHALL BE THE RESPONSIBILITY OF THE PROFESSIONAL OF RECORD FOR THE BUILDING OR STRUCTURE AND IN ACCORDANCE WITH CURRENT BUILDING CODES FOR THE LOADS LISTED ON THIS DRAWING.

9. DOOR JAMB TO BE MINIMUM 2x4 STRUCTURAL GRADE LUMBER. REFER TO JAMB CONNECTION SUPPLEMENT FOR ATTACHMENT TO SUPPORTING STRUCTURE OR ALTERNATIVE ATTACHMENT OPTIONS.

10. FOR LOW HEAD ROOM LIFT CONDITIONS, TOP BRACKET SHALL BE A 13 GA LHR 7/4 TOP BRACKET WITH A MINIMUM OF (3) 1/4-14x7/8" SELF DRILLING CRIMPTITE SCREWS IN LIEU OF THE BRACKET SHOWN ON THIS DRAWING. U-BAR ON TOP SECTION SHALL BE INSTALLED ON TOP OF LHR TOP BRACKETS.

11. DOOR WITHOUT POST SYSTEM HAS BEEN TESTED TO WITHSTAND DESIGN PRESSURES CORRESPONDING TO A 75 MPH WIND SPEED (+/-14.40 PSF). POST SYSTEM SHALL BE INSTALLED WHEN WIND SPEEDS ARE EXPECTED TO EXCEED 75 MPH.

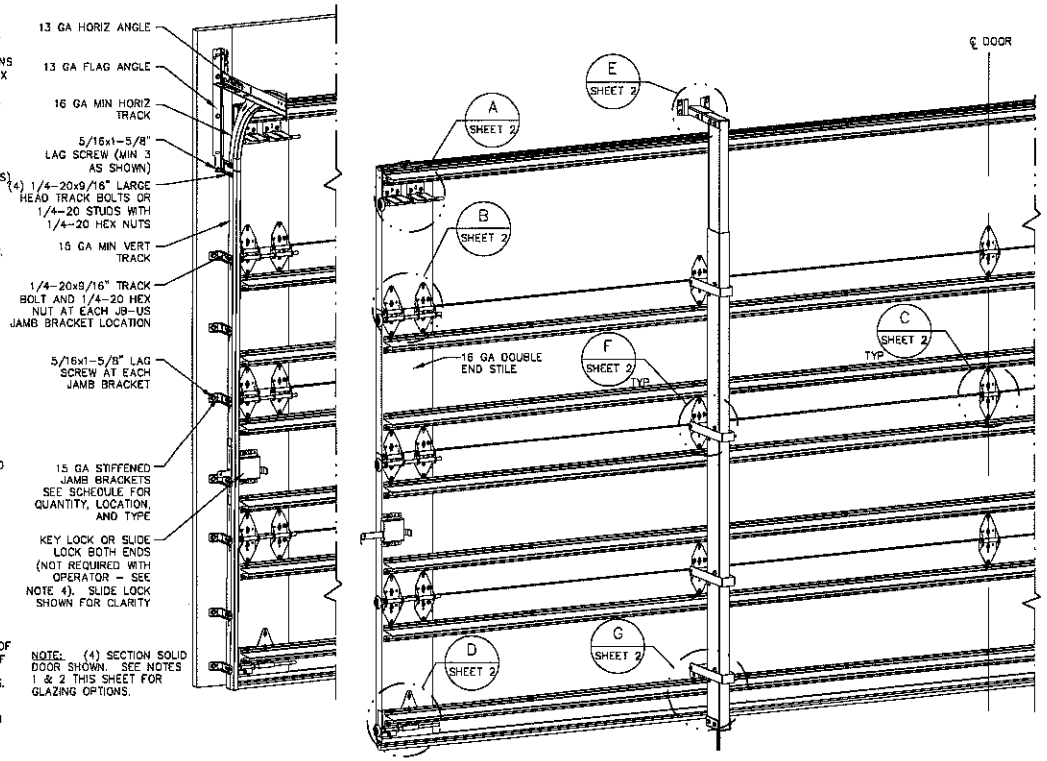

REVISIONS				
ER	REV	DESCRIPTION	DATE	APPROVAL
X	-	RELEASE PER ER	10/25/13	GRT
	A	UPDATED MODELS	1/22/14	GRT
	B	UPDATED GLAZING	6/03/14	GRT

6/4/14

STATE OF TEXAS
MARK A SAWICKI
106291
LICENSED
PROFESSIONAL ENGINEER

STATIC PRESSURE RATINGS	APPROVED SIZES
DESIGN PRESSURE(PSF): +46.0/-52.0	MAX WIDTH: 18'-2"
	MAX HEIGHT: 8'
IMPACT/CYCLIC RATED: YES	MAX SECTION HEIGHT: 24"

SUPERIMPOSED DESIGN PRESSURE LOADS ON SUPPORTING STRUCTURE

MAX DOOR WIDTH	MAX DOOR HEIGHT	UNIFORM LOAD EACH JAMB (PLF)	POINT LOAD AT HEADER AND SLAB AT EACH POST LOCATION (LBS)
17'-2"	7'-0"	+123.6/-123.6	+1261.9/-1426.5
	8'-0"	+123.6/-123.6	+1436.0/-1623.3
18'-2"	7'-0"	+130.8/-130.8	+1422.5/-1608.0
	8'-0"	+130.8/-130.8	+1618.7/-1829.8

JAMB BRACKET SCHEDULE

DOOR HEIGHT	NO. OF SECTIONS	NO. OF JAMB BRACKETS (EACH JAMB)	LOCATION OF CENTERLINE OF JAMB BRACKETS MEASURED FROM BOTTOM OF TRACK (ALL DIMENSIONS ± 2")
6'-6"	4	7	2" (JB-US), 10" (JB-US), 21-3/4" (JB-US), 29-3/4" (JB-US), 39" (JB-US), 48" (JB-US), 57-1/4" (JB-US)
7'-0"	4	7	2" (JB-US), 10" (JB-US), 21-3/4" (JB-US), 29-3/4" (JB-US), 42" (JB-US), 52-1/2" (JB-US), 63-1/4" (JB-US)
7'-6"	4 OR 5	8	2" (JB-US), 10" (JB-US), 18-3/4" (JB-US), 26-3/4" (JB-US), 36" (JB-US), 45" (JB-US), 54-1/4" (JB-US), 74-1/2" (JB-US)
8'-0"	4 OR 5	8	2" (JB-US), 10" (JB-US), 21-3/4" (JB-US), 29-3/4" (JB-US), 39" (JB-US), 48" (JB-US), 57-1/2" (JB-US), 75-1/2" (JB-US)

NOTE:
(JB-US) FOLLOWING DIMENSION DENOTES SLOTTED JAMB BRACKET ATTACHED TO TRACK WITH 1/4-20x9/16" TRACK BOLT AND NUT AS SHOWN ABOVE.

MARK A. SAWICKI, PE
2501 S. STATE HWY 121, SUITE 200
LEWISVILLE, TX 75067
FL PE 72613
TX PE 106291

PROFESSIONAL ENGINEER'S SEAL PROVIDED ONLY FOR VERIFICATION OF WIND LOAD CONSTRUCTION DETAILS.

THE DRAWINGS AND ALL OTHER INFORMATION CONTAINED HEREIN ARE THE CONFIDENTIAL AND PROPRIETARY PROPERTY OF OVERHEAD DOOR CORPORATION AND ITS AFFILIATED COMPANIES. THIS DRAWING AND INFORMATION, IN WHOLE OR IN PART, MAY NOT BE COPIED IN ANY MANNER OR DISCLOSED TO ANYONE WITHOUT THE PRIOR WRITTEN CONSENT OF OVERHEAD DOOR CORPORATION. NO DISCLOSURE OF ANY OF THIS DRAWING OR INFORMATION IS INTENDED TO OPERATE AS A LICENSE OR AUTHORIZATION TO USE IT FOR ANY PURPOSE WITHOUT THE SPECIFIC WRITTEN CONSENT OF OVERHEAD DOOR CORPORATION.

REF DWG	USED ON

THIRD ANGLE PROJECTION

ASME Y14.5M AND Y14.5 APPLY UNLESS OTHERWISE SPECIFIED. DIMENSIONS ARE IN U.S. CUSTOMARY UNITS.

TOLERANCES UNLESS OTHERWISE SPECIFIED

HOLE DIAMETER	WHOLE NUMBERS:	± .25
UNDER .251: +.004/-.000	.X	± .1
.251 TO .500: +.006/-.003	.XX	± .02
OVER .500: +.008/-.003	.XXX	± .010
FRACTIONS ± 1/16	ANGLES:	± .5°

FINISH: N/A

UNIT OF MEASURE: EACH

MATERIAL: NONE

The Genuine. The Original. LEWISVILLE, TEXAS

NAME	DATE
DRAWN BY: G. TAYLOR	10/25/13
CHECKED BY:	
APPROVED BY:	

DRAWING TITLE: SERIES 5745/5765/7565 515/525

DRAWING NUMBER: D- 411329

SCALE: N.T.S. SHEET 1 OF 2

REVISIONS				
ER	REV	DESCRIPTION	DATE	APPROVAL
X	-	RELEASE PER ER	10/25/13	GRT
	A	UPDATED MODELS	1/22/14	GRT
	B	UPDATED GLAZING	6/03/14	GRT

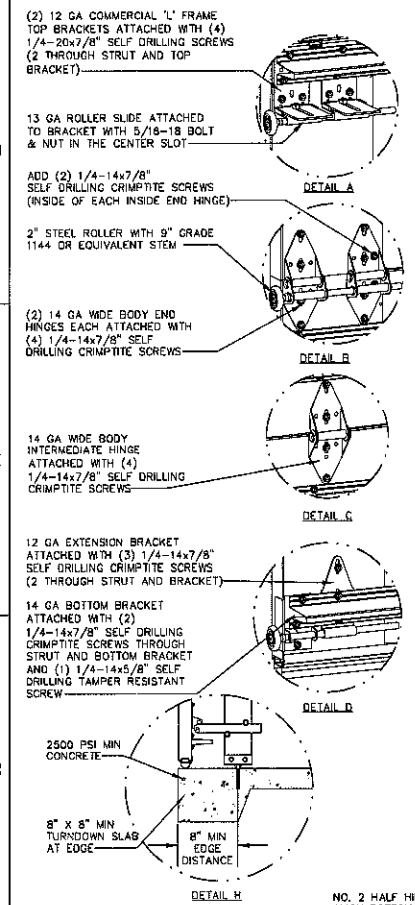

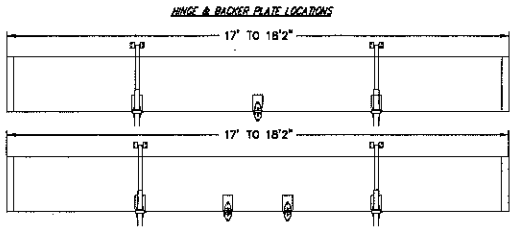

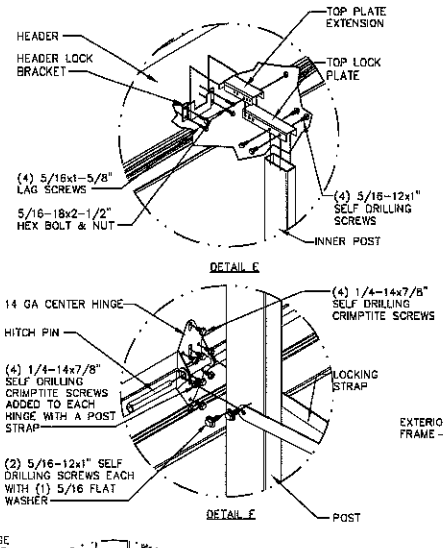

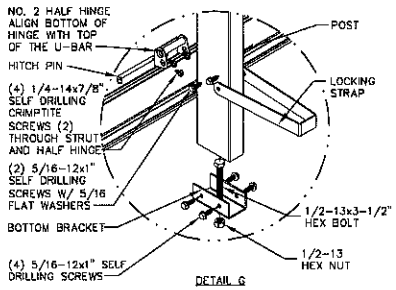

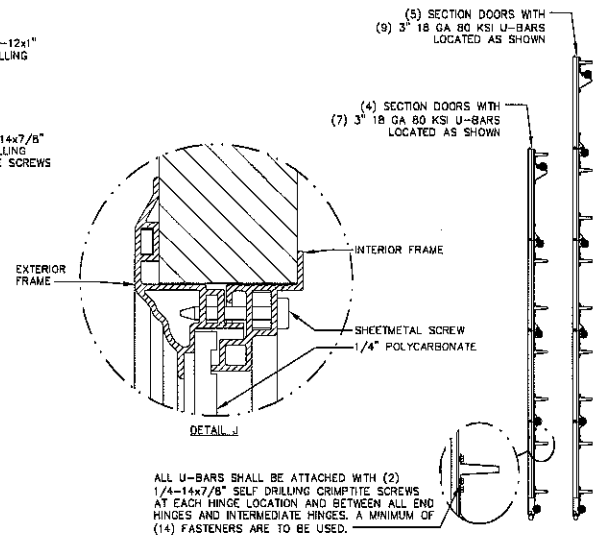

6/4/14

STATE OF TEXAS
MARK A SAWICKI
106291
LICENSED
PROFESSIONAL ENGINEER

MARK A. SAWICKI, PE
2501 S. STATE HWY 121, SUITE 200
LEWISVILLE, TX 75067
FL PE 72613
TX PE 106291

PROFESSIONAL ENGINEER'S SEAL PROVIDED ONLY FOR VERIFICATION OF WIND LOAD CONSTRUCTION DETAILS.

THE DRAWINGS AND ALL OTHER INFORMATION CONTAINED HEREIN ARE THE CONFIDENTIAL AND PROPRIETARY PROPERTY OF OVERHEAD DOOR CORPORATION AND ITS AFFILIATED COMPANIES. THIS DRAWING AND INFORMATION, IN WHOLE OR IN PART, MAY NOT BE COPIED IN ANY MANNER OR DISCLOSED TO ANYONE WITHOUT THE PRIOR WRITTEN CONSENT OF OVERHEAD DOOR CORPORATION. NO DISCLOSURE OF ANY OF THIS DRAWING OR INFORMATION IS INTENDED TO OPERATE AS A LICENSE OR AUTHORIZATION TO USE IT FOR ANY PURPOSE WITHOUT THE SPECIFIC WRITTEN CONSENT OF OVERHEAD DOOR CORPORATION.

REF DWG	USED ON

THIRD ANGLE PROJECTION

ASME Y14.100 AND Y14.5 APPLY UNLESS OTHERWISE SPECIFIED. DIMENSIONS ARE IN U.S. CUSTOMARY UNITS.

TOLERANCES UNLESS OTHERWISE SPECIFIED

HOLE DIAMETER	WHOLE NUMBERS	
UNDER .251 +.004/-.003		
.251 TO .500 +.006/-.003		± .25
OVER .500 +.008/-.003	.X	± .1
	.XX	± .03
FRACTIONS	.XXX	± .010
± 1/16	ANGLES	± .5°

FINISH: N/A

UNIT OF MEASURE: EACH

The Genuine. The Original. LEWISVILLE

MATERIAL: NONE

NAME	DATE
DRAWN BY: G. TAYLOR	10/25/13
CHECKED BY:	
APPROVED BY:	

DRAWING TITLE: SERIES 5745/5765/7565 515/525

DRAWING NUMBER: D- 411329

SCALE: N.T.S. SHEET 2 OF 2