Digitally signed by John E. Scates, P.E.
Date: 2015.03.07 13:51:54 -06'00'

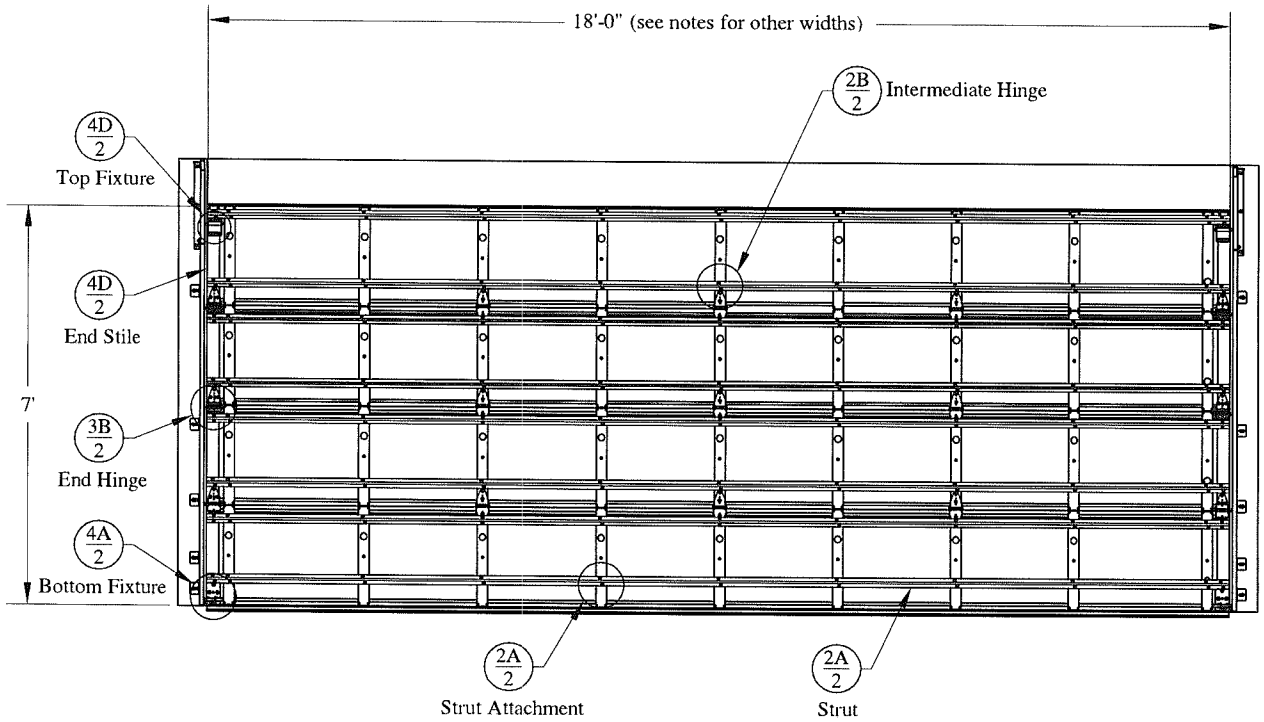

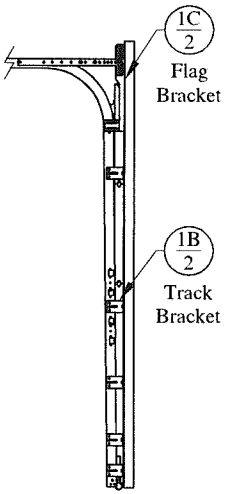

Door Height	Section Quantity	Strut Quantity	Trk Brkt Per Side
6'-6" to 7'-0"	4	8	5
7'-6" to 8'-0"	5	10	6
8'-3" to 8'-9"	5	10	6
9'-0" to 10'-6"	6	12	8
10'-9" to 12'-3"	7	14	9
12'-6" to 14'-0"	8	16	10
14'-3" to 15'-9"	9	18	12
16'-0" to 17'-6"	10	20	14
17'-9" to 19'-3"	11	22	15
19'-6" to 20'-0"	12	24	16

Track bracket quantities shown are for use with grade 2 or better southern pine jambs. When using softer wood species like spruce-pine-fir (SPF) use the quantity of track brackets specified in the chart plus two track brackets per side.

Supplemental Instructions contain details for doors up to 20'-0" high. These are required in addition to this drawing for installation. Always use supplemental instructions in addition to this drawing during door installation.

This door has been evaluated in accordance with ASTM E330-02 and ANSI/DASMA 108-02, 108-05 and for windborne debris in accordance with ASTM E1886-05/E1996-05 and ANSI/DASMA 115-05 (9 pound missile)
Supporting structural elements to be designed by registered professional engineer for specified wind loads.
If door is not electrically operated, a lock must be installed.
Maximum door height: 20'-0" Maximum section height: 21"
Per ASCE 7-02 & 7-05 as referenced by 2006 IBC 1609 and 2006 IRC 301,
Design Pressures (DP) typically meet or exceed the requirements for the following wind speeds.
These wind speeds are for 7' high doors, taller openings typically withstand higher wind speeds.

Width	Design Pressure	Exposure "B"	Exposure "C"	Windows	Center Stiles
18'-00"	+ 30.3 (psf) / - 33.7 (psf)	142 (mph)	120 (mph)	8	7
16'-02"	+ 30.3 (psf) / - 33.7 (psf)	141 (mph)	119 (mph)	8	7

John E. Scates, P.E. 3/7/15
3121 Fairgate Drive
Carrollton, Texas 75007
TXPE 56308, F-2203

Professional Engineer's seal provided only for verification of windload construction details

C.H.I. OVERHEAD DOORS
SCALE nts
DATE 3-5-2015

Models: 2240, 2241, 2250, 2251, 4240, 4241, 4250, 4251, 5240, 5241, 5250, 5251

18'-0" wide, 142 mph Exposure "B"
See notes for other widths and wind speeds

C.H.I. Drawing: TZ6i-18-01513
page 1_of_2

Strut (if applicable) not shown for clarity.

Details on some views may have been omitted for clarity.

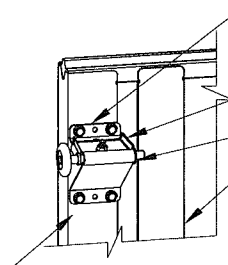

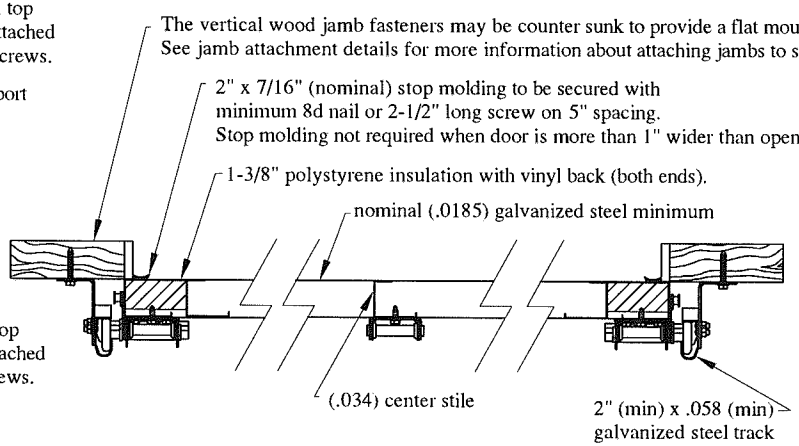

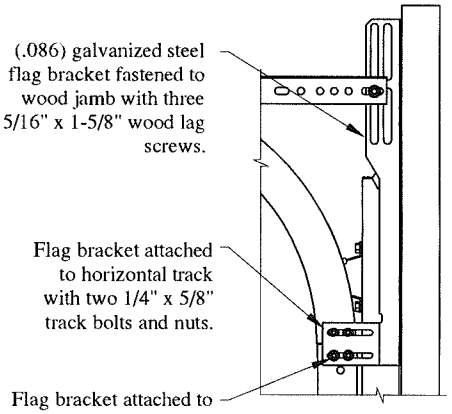

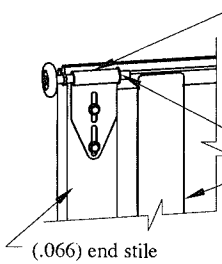

Optional low head room top bracket

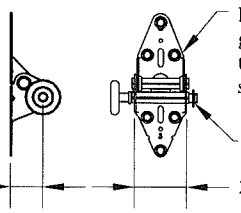

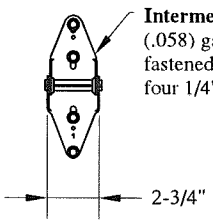

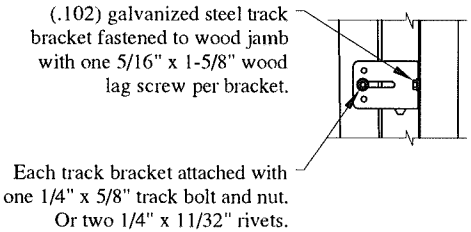

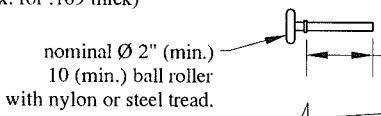

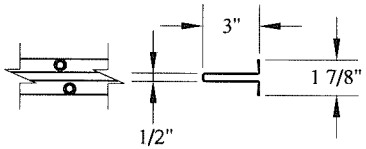

(.051) 50 ksi galvanized steel 3" strut attached with two 1/4" x 3/4" screws per stile or hinge plate.

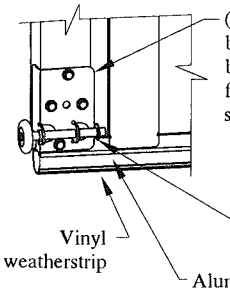

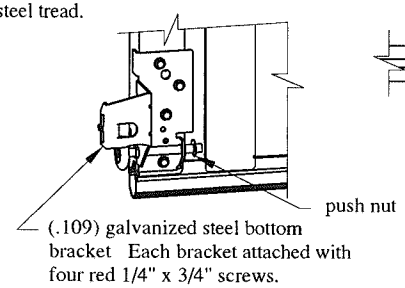

Optional low head room bottom bracket

John E. Scates
3/7/15

John E. Scates, P.E.
3121 Fairgate Drive
Carrollton, Texas 75007
TXPE 56308, F-2203

Professional Engineer's seal provided only for verification of windload construction details

C.H.I. OVERHEAD DOORS	SCALE nts
	DATE 3-5-2015
Models: 2240, 2241, 2250, 2251, 4240, 4241, 4250, 4251, 5240, 5241, 5250, 5251	
18'-0" wide, 142 mph Exposure "B" See notes for other widths and wind speeds	
C.H.I. Drawing: TZ6i-18-01513 page_2_of_2	