Window Options :
Max daylight opening 39-3/8" x 12-1/2"
1/8" DSB
1/4" Tempered Glass
7/16" Insulated Glass
7/16" Tempered Insulated Glass

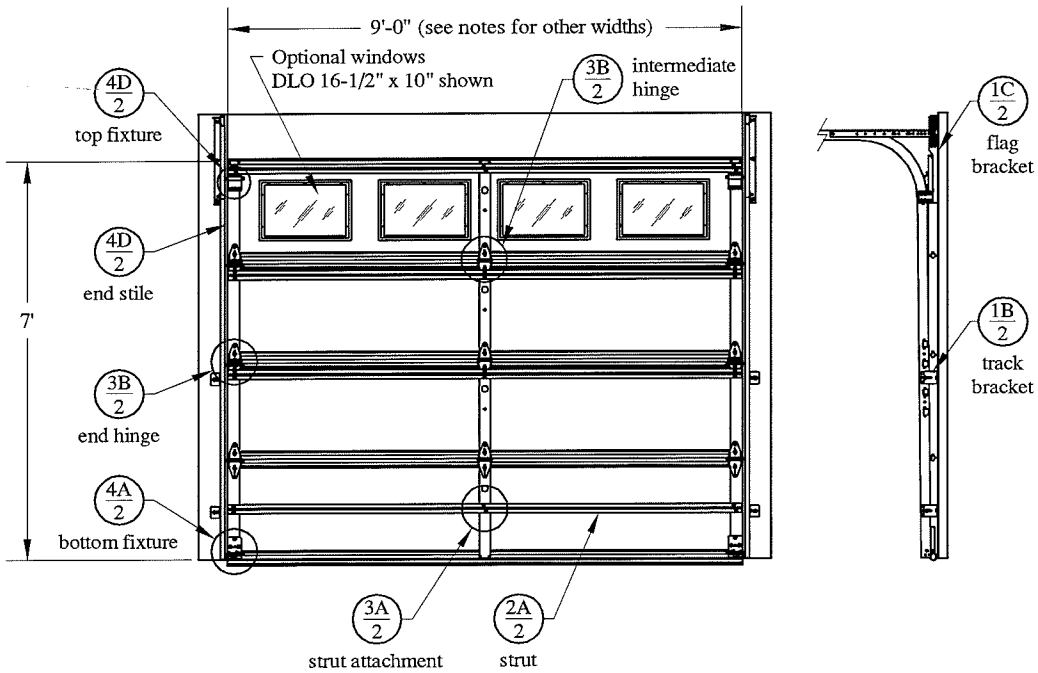

door height	section quantity	strut quantity	trk brkt per side
6'-6" to 7'-0"	4	4	2
7'-6" to 8'-0"	5	5	3
8'-3" to 8'-9"	5	5	3
9'-0" to 10'-6"	6	6	4
10'-9" to 12'-3"	7	7	5
12'-6" to 14'-0"	8	8	6
14'-3" to 15'-9"	9	9	7
16'-0" to 17'-6"	10	10	8
17'-9" to 19'-3"	11	11	9
19'-6" to 20'-0"	12	12	10

Track bracket quantities shown are for use with grade 2 or better spruce-pine-fir (SPF) or southern pine jambs.

This door has been evaluated in accordance with ASTM E 330-02 and ANSI/DASMA 108-02 and 108-05. Per ASCE 7-02 & 7-05 as referenced by 2006 IBC 1609 and 2006 IRC 301,

Design Pressures (DP) typically meet or exceed the requirements for the following wind speeds. These wind speeds are for 7' high doors.

Width	Design Pressure	Exposure -B-	Exposure -C-	Windows	Center Stiles
10'-08"	19.4 (psf) / - 21.9 (psf)	111 (mph)	94 (mph)	YES	2
10'-06"	20.1 (psf) / - 22.6 (psf)	113 (mph)	95 (mph)	YES	2
10'-00"	22.1 (psf) / - 24.9 (psf)	118 (mph)	100 (mph)	YES	1
09'-06"	24.5 (psf) / - 27.6 (psf)	124 (mph)	105 (mph)	YES	1
09'-00"	27.3 (psf) / - 30.8 (psf)	131 (mph)	110 (mph)	YES	1
08'-06"	28.9 (psf) / - 32.6 (psf)	134 (mph)	113 (mph)	YES	1
08'-00"	30.7 (psf) / - 34.7 (psf)	138 (mph)	116 (mph)	YES	1
07'-00"	35.1 (psf) / - 39.6 (psf)	146 (mph)	123 (mph)	YES	1
06'-00"	41.0 (psf) / - 46.2 (psf)	156 (mph)	132 (mph)	YES	1

Center stile quantity is minimum per section.

Supporting structural elements to be designed by registered professional engineer for specified wind loads. If door is not electrically operated, a lock must be installed.
Maximum door height: 20'-0"
Maximum section height: 21"

Professional Engineer's seal provided only for verification of windload construction details

STATE OF TEXAS
JOHN E. SCATES
56308
12/20/12

John E. Scates, P.E.
3121 Fairgate Drive
Carrollton, Texas 75007
TXPE 56308, F-2203

Supplemental Instructions contain details for doors up to 20'-0" high. These are required in addition to this drawing for installation. Always use supplemental instructions in addition to this drawing during door installation.

C.H.I. OVERHEAD DOORS
SCALE nts
DATE 12-03-2012

Models: 2240/41, 2250/51, 4240/41, 4250/51, 5240/41, 5250/51

41.0 (psf) / - 46.2 (psf) at 06'-00" through 19.4 (psf) / - 21.9 (psf) at 10'-08"

C.H.I. Drawing: TZ5-09-013L3

Strut (if applicable) not shown for clarity.

Details on some views may have been omitted for clarity.

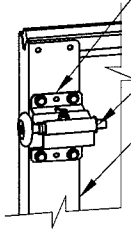

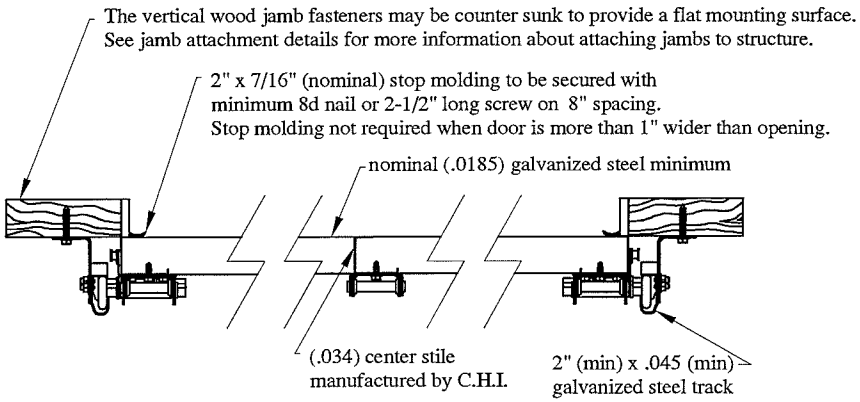

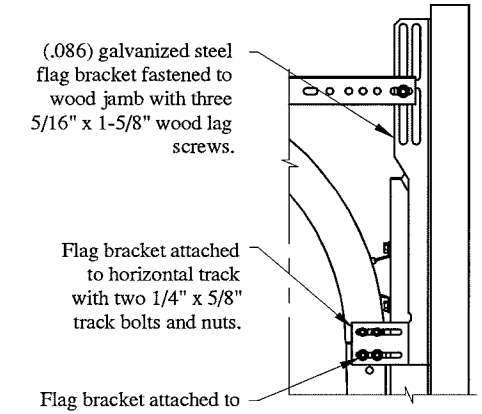

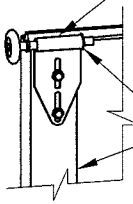

Optional low head room top bracket

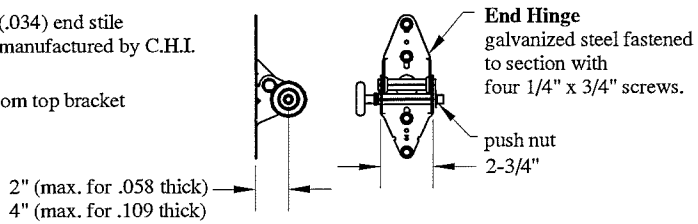

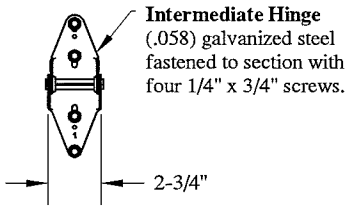

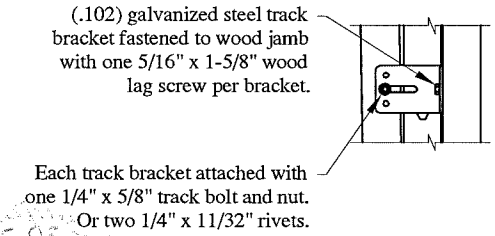

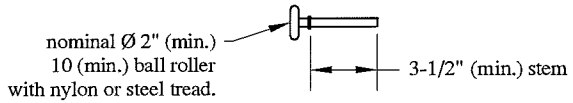

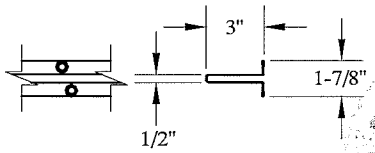

(.051) 50 ksi galvanized steel 3" strut attached with two 1/4" x 3/4" screws per stile or hinge plate.

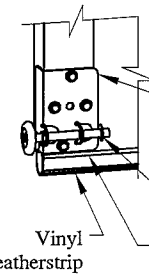

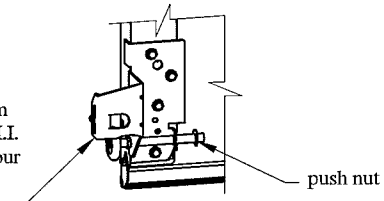

Optional low head room bottom bracket

Professional Engineer's seal provided only for verification of windload construction details

John E. Scates, P.E.
3121 Fairgate Drive
Carrollton, Texas 75007
TXPE 56308, F-2203

STATE OF TEXAS
JOHN E. SCATES
56308
12/20/12

C.H.I. OVERHEAD DOORS	SCALE nts
	DATE 12-03-2012
Models: 2240/41, 2250/51, 4240/41, 4250/51, 5240/41, 5250/51	
41.0 (psf) / - 46.2 (psf) at 06'-00" through 19.4 (psf) / - 21.9 (psf) at 10'-08"	
C.H.I. Drawing: TZ5-09-013L3	page 2 of 2