REVISIONS			
REV	DESCRIPTION	DATE	APPROVAL
-	DRAWING RELEASE	7-10-08	DM
A	CHANGED NOTE 1	8-11-08	DM

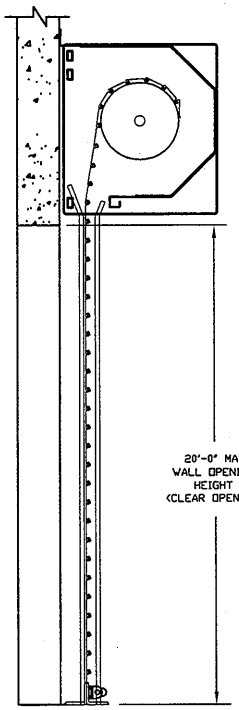

LEFT END VIEW

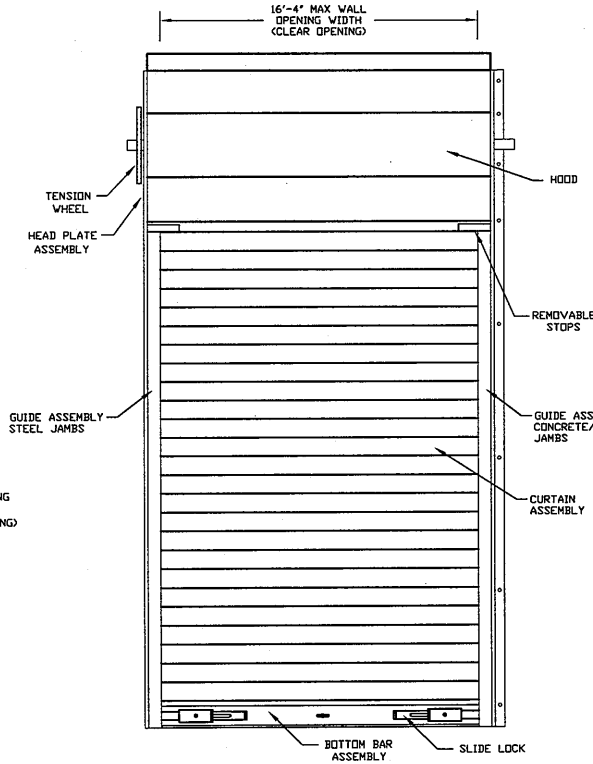

INSIDE ELEVATION

RIGHT HAND OPERATION SHOWN - LEFT HAND OPPOSITE

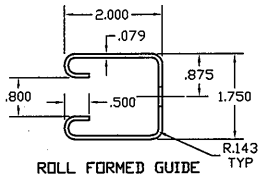

ROLL FORMED GUIDE

ASTM A653 GR 50 CLASS 1
STRUCTURAL STEEL (SS) G-60

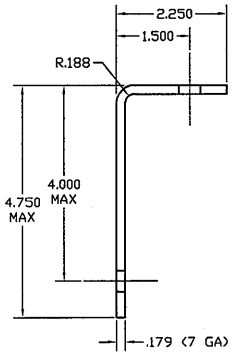

ROLL FORMED WALL ANGLE

ASTM A1011 GR 50 CLASS 1
STRUCTURAL STEEL (SS)
POWDER COATED

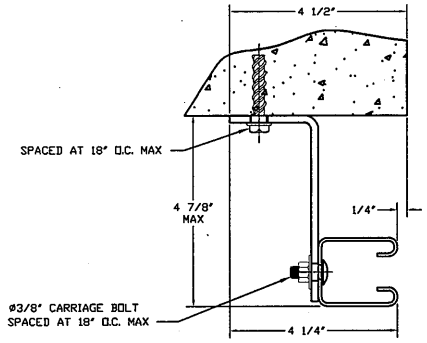

CONCRETE/FILLED BLOCK JAMBS
USING 3/8" X 1 3/4"
POWERS WEDGE-BOLT

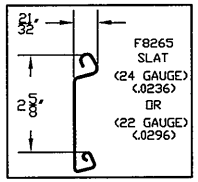

ASTM A653 GR 40 ZINC
COATED STEEL
PRE-PAINTED WITH
FULL COAT OF PRIMER AND
BAKED SILICONIZED
POLYESTER FINISH COAT

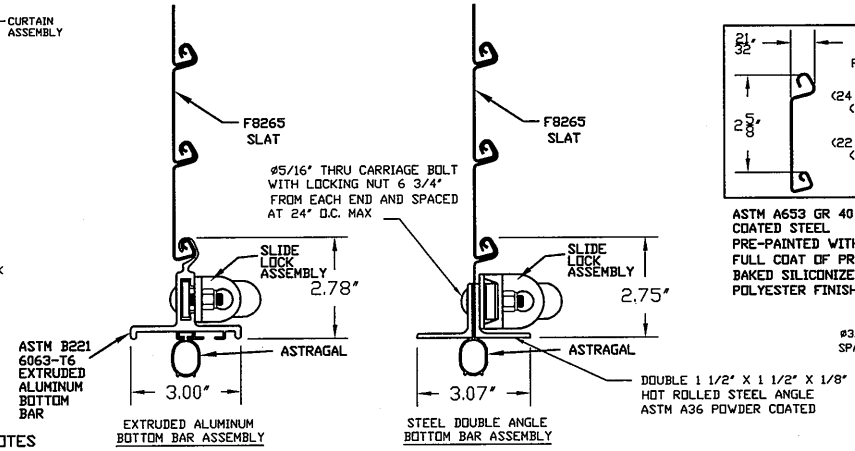

EXTRUDED ALUMINUM
BOTTOM BAR ASSEMBLY

STEEL DOUBLE ANGLE
BOTTOM BAR ASSEMBLY

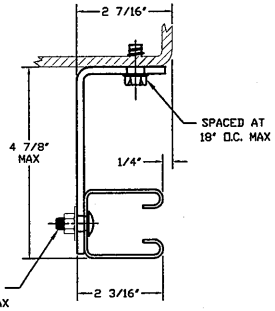

STEEL JAMBS
USING 3/8-16 X 1" HWH
TYPE 23 THREAD CUTTING SCREW

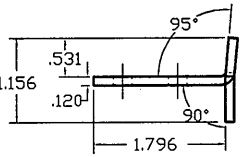

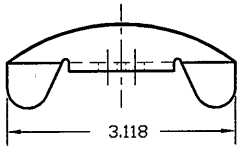

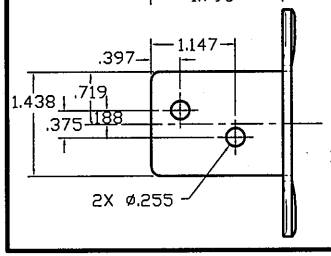

WINDLOCK

ASTM A653
GR 50 CLASS 1
STRUCTURAL STEEL (SS)
G-60

SEE SHEET 2 FOR NOTES

THESE CONFIDENTIAL DOCUMENTS SUBMITTED BY JANUS CONTAIN INFORMATION OF A PROPRIETARY NATURE AND MAY NOT BE REPRODUCED OR USED TO MANUFACTURE ANYTHING IN PART OR IN WHOLE FOR ANY PURPOSE OTHER THAN THAT WHICH IS NECESSARY FOR PREPARATION OF BIDS OF ENGINEERING WITHOUT THE EXPRESS PERMISSION OF JANUS WHICH MAY RECALL DOCUMENTS AT ANY TIME.

UNLESS OTHERWISE SPECIFIED DIMENSIONS ARE IN INCHES AND TOLERANCES ARE:

DECIMAL		FRACTIONS	ANGLES	HOLE DIAMETERS	
.XX	±.03	±1/16	±1°	UNDER .251	+.004 -.003
.XXX	±.005			.251 to .500	+.006 -.003
				OVER .500	+.008 -.003

STATE OF TEXAS
JOSEPH H. DIXON, JR.
18627
LICENSED
PROFESSIONAL ENGINEER

10/2/10

PART NUMBER:	NA
MATERIAL:	NA
APPLIED FINISH:	NA
UNIT OF MEASURE:	NA

APPROVALS	DATE
DRAWN: CINDY WOOTEN	7-10-08
CHECKED: DON MILLS	7-10-08
APPROVED: DON MILLS	7-10-08

JANUS INTERNATIONAL CORPORATION®
134 JANUS INTERNATIONAL BLVD TEMPLE, GA 30179
770-562-2850/Fax 770-562-1991
© 2008 Janus International Corporation All Rights Reserved

CERTIFIED WIND LOAD RATED
SERIES SD10 ROLLED GUIDES DOOR ASSEMBLY
MAX. SIZE 16'-4" X 20'-0"

SIZE	DRAWING NUMBER:	REV:
B	RS9001	A

SCALE: NONE SHEET: 1 OF: 2

REVISIONS			
REV	DESCRIPTION	DATE	APPROVAL
-	DRAWING RELEASE	7-10-08	DM
A	CHANGED NOTE 1	8-11-08	DM

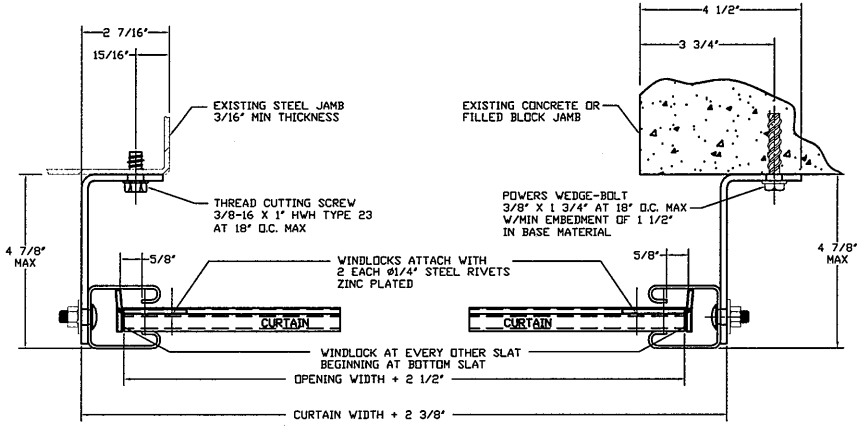

STEEL JAMBS
LH GUIDE MOUNT SHOWN

CONC/FILLED BLOCK JAMBS
RH GUIDE MOUNT SHOWN

SUPERIMPOSED LOAD DIAGRAM

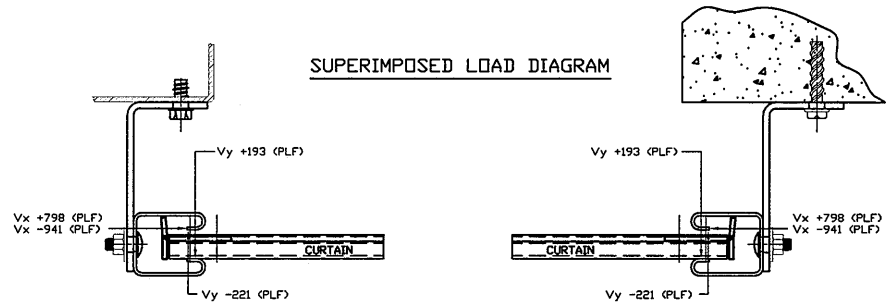

STEEL JAMBS
LH GUIDE MOUNT SHOWN

CONCRETE/FILLED BLOCK JAMBS
RH GUIDE MOUNT SHOWN

ALLOWABLE TRANSVERSE
DESIGN WIND LOADS (PSF)
FOR 24 GAUGE CURTAIN
(TESTED SLAT GAUGE)

MAX DOOR WIDTH	MAX DOOR HEIGHT (FT)	DESIGN WIND LOADS (PSF)
6'-4"	20	+40.7/-45.8
7'-4"	20	+40.7/-45.8
8'-4"	20	+40.7/-45.8
9'-4"	20	+40.7/-45.8
10'-4"	20	+40.7/-45.8
11'-4"	20	+40.7/-45.8
12'-4"	20	+40.7/-45.8
13'-4"	20	+34.8/-39.3
14'-4"	20	+30.2/-34.2
15'-4"	20	+26.5/-30.2
16'-4"	20	+23.5/-26.9

ALLOWABLE TRANSVERSE
DESIGN WIND LOADS (PSF)
FOR 22 GAUGE CURTAIN

MAX DOOR WIDTH	MAX DOOR HEIGHT (FT)	DESIGN WIND LOADS (PSF)
6'-4"	20	+41.8/-46.9
7'-4"	20	+41.8/-46.9
8'-4"	20	+41.8/-46.9
9'-4"	20	+41.8/-46.9
10'-4"	20	+41.8/-46.9
11'-4"	20	+41.8/-46.9
12'-4"	20	+41.8/-46.9
13'-4"	20	+35.4/-40.0
14'-4"	20	+30.5/-34.6
15'-4"	20	+26.6/-30.4
16'-4"	20	+23.5/-26.9

GENERAL NOTES

1. THIS ROLLING DOOR SYSTEM IS DESIGNED IN ACCORDANCE WITH THE 2007 FLORIDA BUILDING CODE AND THE 2006 INTERNATIONAL BUILDING CODE. THE REQUIRED DESIGN WIND PRESSURES FOR A DOOR IN ANY PARTICULAR BUILDING SHALL BE DETERMINED IN ACCORDANCE WITH SECTION 1609 OF THE 2007 FBC. IN CODE JURISDICTIONS OUTSIDE OF FLORIDA, REQUIRED DESIGN WIND PRESSURES MAY BE DETERMINED IN ACCORDANCE WITH SECTION 1609 OF THE 2006 IBC OR WITH THE LOCAL BUILDING CODE IN EFFECT FOR THE SPECIFIC LOCATION.
2. THIS ROLLING DOOR HAS BEEN TESTED IN ACCORDANCE WITH ASTM E-330 AND ANSI/DASMA 108 TO SAFELY RESIST A POSITIVE OR NEGATIVE WIND LOAD AS NOTED BELOW. A TEST LOAD OF 1.5 X DESIGN LOAD HAS BEEN USED.

   DESIGN LOAD $= {}^{+23.5}_{-26.9}$ PSF
3. WIND LOADS FOR BUILDING OPENINGS SHALL BE DETERMINED BY A PROFESSIONAL ENGINEER USING APPROPRIATE WIND SPEED AND DESIGN CRITERIA. THIS DOOR MAY BE USED WHERE THE DESIGN LOAD MEETS OR EXCEEDS THE DESIGN LOAD FOR THE BUILDING OPENING.
4. SUPERIMPOSED LOADS ON THE JAMBS FROM THIS DOOR ARE DESIGNED AS Vx AND Vy HEREIN. CONTRACTORS SHALL HAVE BUILDING ENGINEER VERIFY ADEQUACY OF BUILDING STRUCTURE TO RESIST SUPERIMPOSED LOADS Vx, Vy AND BRACKET LOADS SHOWN.
5. ALL WELDING SHALL BE PERFORMED BY QUALIFIED WELDERS IN ACCORDANCE WITH A.W.S. SPECIFICATIONS, LATEST EDITION. ALL WELDING ELECTRODES SHALL CONFORM TO A.W.S. A5.1 GRADE E-70.
6. DOORS SHALL BE PROVIDED WITH LOCK MECHANISMS LOCATED AT BOTH ENDS OF THE BOTTOM BAR.
7. ALL BOLTS AND WASHERS SHALL BE GALVANIZED OR STAINLESS STEEL WITH A MINIMUM TENSILE STRENGTH OF 60 KSI.
8. DESIGN BASED ON CERTIFIED TESTING LABORATORIES, INC., TEST REPORT NO. CTLA 1837W-1 DATED 7/10/08.
9. ANCHOR NOTES:
   A. EMBEDMENT LENGTH DOES NOT INCLUDE STUCCO FINISH.
   B. FOR HOLLOW MASONRY, FILL ALL CELLS @ ANCHOR WITH 2500 PSI GROUT.
   C. ANCHORS SHALL BE INSTALLED IN ACCORDANCE WITH MANUFACTURER'S SPECIFICATIONS.
10. DOOR OPERATION TYPE TO BE PUSH-UP, HAND CHAIN, HAND CRANK OR ELECTRIC.
11. GUIDE TO JAMB ATTACHMENT FASTENERS IN OPENING AREA BEGIN 6" FROM FLOOR AND END 5" BELOW TOP OF WALL OPENING.
12. TEST DOOR WALL OPENING SIZE: 16'-4" x 8'-0".

THESE CONFIDENTIAL DOCUMENTS SUBMITTED BY JANUS CONTAIN INFORMATION OF A PROPRIETARY NATURE AND MAY NOT BE REPRODUCED OR USED TO MANUFACTURE ANYTHING IN PART OR IN WHOLE FOR ANY PURPOSE OTHER THAN THAT WHICH IS NECESSARY FOR PREPARATION OF BIDS OF ENGINEERING WITHOUT THE EXPRESS PERMISSION OF JANUS WHICH MAY RECALL DOCUMENTS AT ANY TIME.

UNLESS OTHERWISE SPECIFIED DIMENSIONS ARE IN INCHES AND TOLERANCES ARE:

DECIMAL		FRACTIONS	ANGLES	HOLE DIAMETERS	
.XX	±.03	±1/16	±0°30'	UNDER .251	+.004 -.003
.XXX	±.005			.251 to .500	+.006 -.003
				OVER .500	+.008 -.003

STATE OF TEXAS
JOSEPH H. DIXON, JR.
18627
LICENSED
PROFESSIONAL ENGINEER

10/2/10

PART NUMBER:	NA
MATERIAL:	NA
APPLIED FINISH:	NA
UNIT OF MEASURE:	NA

APPROVALS	DATE
DRAWN: CINDY WOOTEN	7-10-08
CHECKED: DON MILLS	7-10-08
APPROVED: DON MILLS	7-10-08

JANUS INTERNATIONAL CORPORATION®
134 JANUS INTERNATIONAL BLVD TEMPLE, GA 30179
770-562-2850/Fax 770-562-1991
© 2008 Janus International Corporation All Rights Reserved

CERTIFIED WIND LOAD RATED
SERIES SD10 ROLLED GUIDES DOOR ASSEMBLY
MAX. SIZE 16'-4" X 20'-0"

SIZE	DRAWING NUMBER:	REV:
B	RS9001	A

SCALE: NONE SHEET: 2 OF: 2