REVISIONS			
REV	DESCRIPTION	DATE	APPROVAL
—	DRAWING RELEASE	2-9-10	DM

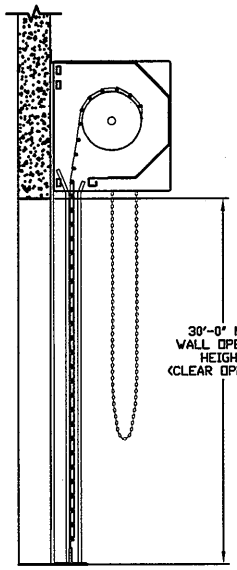

LEFT END VIEW

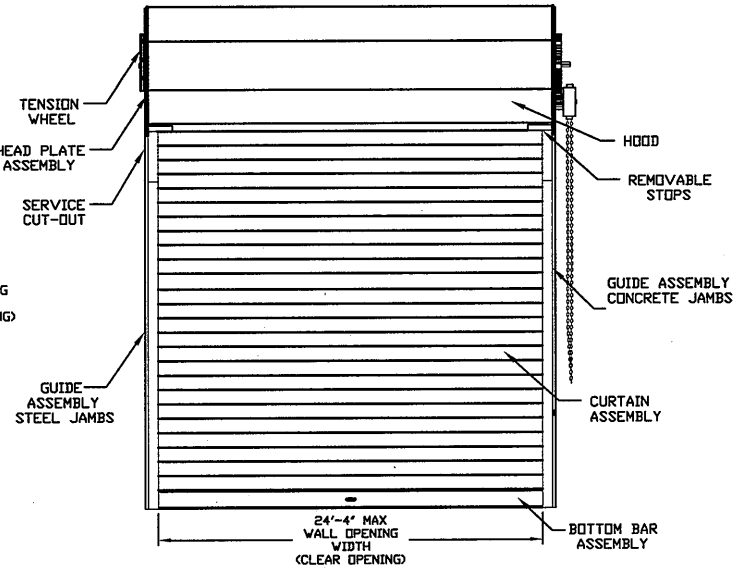

INSIDE ELEVATION

RIGHT HAND OPERATION SHOWN - LEFT HAND OPPOSITE

ALLOWABLE TRANSVERSE DESIGN WIND LOADS (PSF)
FOR 24 GAUGE SLAT/24 GAUGE BACK COVER (TESTED GAUGE)

MAX DOOR WIDTH	MAX DOOR HEIGHT (FT)	DESIGN WIND LOADS (PSF)	MAX DOOR WIDTH	MAX DOOR HEIGHT (FT)	DESIGN WIND LOADS (PSF)
6'-4"	30	+/- 72.1	16'-4"	30	+/- 50.0
7'-4"	30	+/- 72.1	17'-4"	30	+/- 45.1
8'-4"	30	+/- 72.1	18'-4"	30	+/- 41.0
9'-4"	30	+/- 72.1	19'-4"	30	+/- 37.4
10'-4"	30	+/- 72.1	20'-4"	30	+/- 34.4
11'-4"	30	+/- 72.1	21'-4"	30	+/- 37.4
12'-4"	30	+/- 72.1	22'-4"	30	+/- 34.7
13'-4"	30	+/- 72.1	23'-4"	30	+/- 32.3
14'-4"	30	+/- 63.1	24'-4"	30	+/- 30.2
15'-4"	30	+/- 53.9			

ALLOWABLE TRANSVERSE DESIGN WIND LOADS (PSF)
FOR 22 GAUGE SLAT/24 GAUGE BACK COVER

MAX DOOR WIDTH	MAX DOOR HEIGHT (FT)	DESIGN WIND LOADS (PSF)	MAX DOOR WIDTH	MAX DOOR HEIGHT (FT)	DESIGN WIND LOADS (PSF)
6'-4"	30	+/- 74.9	16'-4"	30	+/- 51.4
7'-4"	30	+/- 74.9	17'-4"	30	+/- 46.3
8'-4"	30	+/- 74.9	18'-4"	30	+/- 41.9
9'-4"	30	+/- 74.9	19'-4"	30	+/- 38.2
10'-4"	30	+/- 74.9	20'-4"	30	+/- 35.1
11'-4"	30	+/- 74.9	21'-4"	30	+/- 38.0
12'-4"	30	+/- 74.9	22'-4"	30	+/- 35.2
13'-4"	30	+/- 74.9	23'-4"	30	+/- 32.8
14'-4"	30	+/- 65.3	24'-4"	30	+/- 30.6
15'-4"	30	+/- 57.6			

ALLOWABLE TRANSVERSE DESIGN WIND LOADS (PSF)
FOR 20 GAUGE SLAT/24 GAUGE BACK COVER

MAX DOOR WIDTH	MAX DOOR HEIGHT (FT)	DESIGN WIND LOADS (PSF)	MAX DOOR WIDTH	MAX DOOR HEIGHT (FT)	DESIGN WIND LOADS (PSF)
6'-4"	30	+/- 76.9	16'-4"	30	+/- 52.4
7'-4"	30	+/- 76.9	17'-4"	30	+/- 47.1
8'-4"	30	+/- 76.9	18'-4"	30	+/- 42.6
9'-4"	30	+/- 76.9	19'-4"	30	+/- 38.8
10'-4"	30	+/- 76.9	20'-4"	30	+/- 35.5
11'-4"	30	+/- 76.9	21'-4"	30	+/- 38.5
12'-4"	30	+/- 76.9	22'-4"	30	+/- 35.6
13'-4"	30	+/- 76.9	23'-4"	30	+/- 33.1
14'-4"	30	+/- 66.9	24'-4"	30	+/- 30.9
15'-4"	30	+/- 58.9			

ALLOWABLE TRANSVERSE DESIGN WIND LOADS (PSF)
FOR 18 GAUGE SLAT/24 GAUGE BACK COVER

MAX DOOR WIDTH	MAX DOOR HEIGHT (FT)	DESIGN WIND LOADS (PSF)	MAX DOOR WIDTH	MAX DOOR HEIGHT (FT)	DESIGN WIND LOADS (PSF)
6'-4"	30	+/- 79.7	16'-4"	30	+/- 53.8
7'-4"	30	+/- 79.7	17'-4"	30	+/- 48.2
8'-4"	30	+/- 79.7	18'-4"	30	+/- 43.5
9'-4"	30	+/- 79.7	19'-4"	30	+/- 39.6
10'-4"	30	+/- 79.7	20'-4"	30	+/- 36.2
11'-4"	30	+/- 79.7	21'-4"	30	+/- 39.2
12'-4"	30	+/- 79.7	22'-4"	30	+/- 36.2
13'-4"	30	+/- 79.7	23'-4"	30	+/- 33.6
14'-4"	30	+/- 69.1	24'-4"	30	+/- 31.3
15'-4"	30	+/- 60.6			

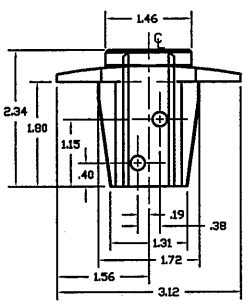

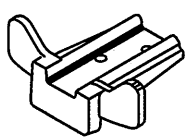

WINDLOCK

FERRITIC MALLEABLE IRON
GRADE 32510, PER ASTM A47
ZINC COATED

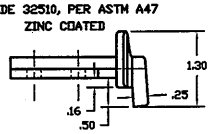

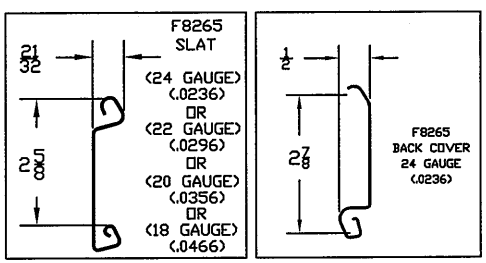

I8265 SLAT ASSEMBLY
ASTM A653 GR 40 ZINC COATED STEEL
PRE-PAINTED WITH FULL COAT OF PRIMER
AND BAKED SILICONIZED POLYESTER FINISH COAT

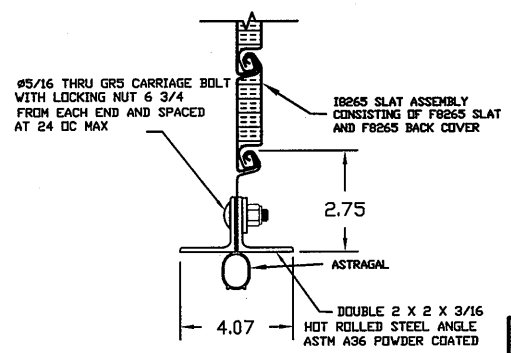

STEEL DOUBLE ANGLE
BOTTOM BAR ASSEMBLY

SEE SHEET 2 FOR NOTES

CERTIFIED WIND LOAD RATED
SERIES ID25 ANGLE GUIDES ROLL-UP DOOR ASSEMBLY
I8265 INSULATED SLAT ASSEMBLY
MAX. SIZE 24'-4" X 30'-0"

UNLESS OTHERWISE SPECIFIED, DIMENSIONS ARE IN INCHES AND TOLERANCES ARE:

ANGLES	HOLE DIAMETERS	
± 0° 30'	UNDER .251	+.004 -.003
DECIMAL .XX ±.03 .XXX ±.005	.251 TO .500	+.006 -.003
FRACTIONS ± 1/16	OVER .500	+.008 -.003

APPROVALS		DATE	APPROVALS		DATE
DRAWN	BECKY NELSON	1-22-10	APPROVED	DON MILLS	2-9-10
CHECKED	DON MILLS	2-9-10			

THESE CONFIDENTIAL DOCUMENTS SUBMITTED BY JANUS CONTAIN INFORMATION OF A PROPRIETARY NATURE AND MAY NOT BE REPRODUCED OR USED TO MANUFACTURE ANYTHING IN PART OR IN WHOLE FOR ANY PURPOSE OTHER THAN THAT WHICH IS NECESSARY FOR PREPARATION OF BIDS OR ENGINEERING WITHOUT THE EXPRESS PERMISSION OF JANUS WHICH MAY RECALL DOCUMENTS AT ANY TIME.

PART NUMBER	DRAWING NUMBER	
NA	RS9008	
MATERIAL	FINISH	
NA	NA	
UNIT OF MEASURE	SIZE	SCALE
NA	B	NONE

SHEET	OF	REV
1	2	—

JANUS INTERNATIONAL CORPORATION®
134 Janus International Blvd. Temple, GA 30179
770-562-2850/Fax 770-562-1991

© 2010 Janus International Corporation All Rights Reserved

STATE OF TEXAS
JOSEPH H. DIXON, JR.
18627
LICENSED
PROFESSIONAL ENGINEER

10/2/10

REVISIONS			
REV	DESCRIPTION	DATE	APPROVAL
—	DRAWING RELEASE	2-9-10	DM

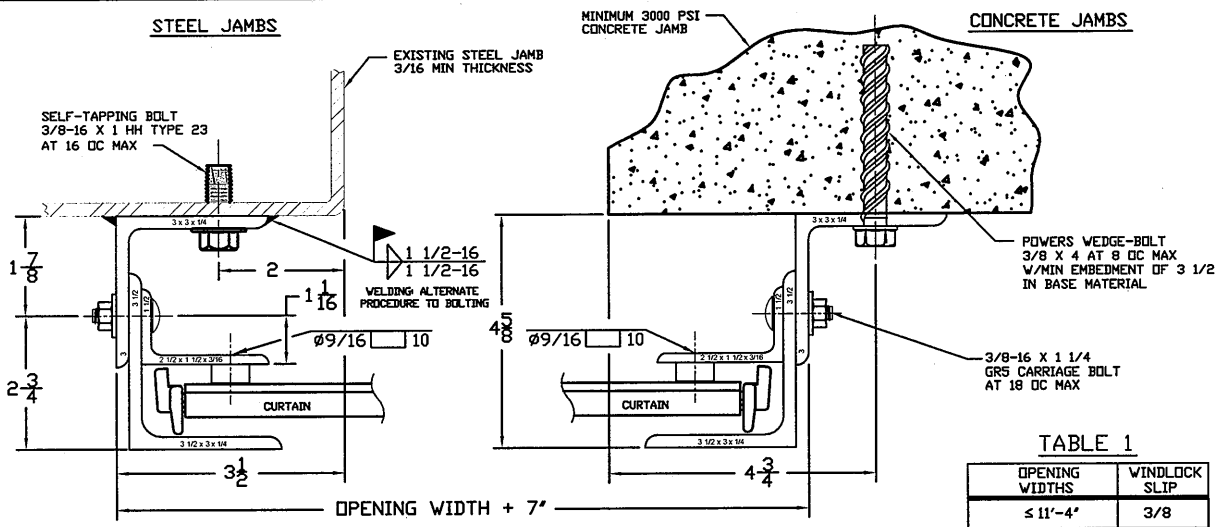

TABLE 1

OPENING WIDTHS	WINDLOCK SLIP
≤ 11'-4"	3/8
>11'-4" ≤ 20'-4"	5/8
>20'-4" ≤ 24'-4"	7/8

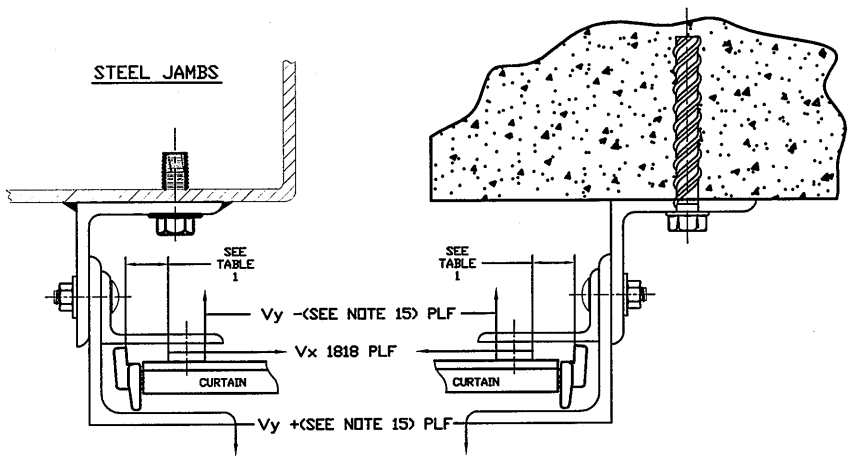

SUPERIMPOSED LOAD DIAGRAM

GENERAL NOTES

1. THIS ROLL-UP DOOR SYSTEM IS DESIGNED IN ACCORDANCE WITH THE FLORIDA BUILDING CODE AND THE INTERNATIONAL BUILDING CODE. THE REQUIRED DESIGN WIND PRESSURES FOR A DOOR IN ANY PARTICULAR BUILDING SHALL BE DETERMINED IN ACCORDANCE WITH SECTION 1609 OF THE FBC. IN CODE JURISDICTIONS OUTSIDE OF FLORIDA, REQUIRED DESIGN WIND PRESSURES MAY BE DETERMINED IN ACCORDANCE WITH SECTION 1609 OF THE IBC OR WITH THE LOCAL BUILDING CODE IN EFFECT FOR THE SPECIFIC LOCATION.
2. THIS ROLL-UP DOOR HAS BEEN SUCCESSFULLY TESTED ACCORDING TO THE UNIFORM STATIC AIR PRESSURE TEST PER ASTM E 330 AND ANSI/DASMA 108 TO SAFELY RESIST A POSITIVE AND NEGATIVE WIND LOAD AS NOTED BELOW. A TEST LOAD OF 1.5 X DESIGN LOAD HAS BEEN USED.

   DESIGN LOAD = +50.0 / -50.0 PSF 24 GA CURTAIN (I8265 SLAT ASSEMBLY)
   F8265 SLAT (24 GA)/F8265 BACK COVER (24 GA)
3. WIND LOADS FOR BUILDING OPENINGS SHALL BE DETERMINED BY A PROFESSIONAL ENGINEER USING APPROPRIATE WIND SPEED AND DESIGN CRITERIA. THIS DOOR MAY BE USED WHERE THE DESIGN LOAD MEETS OR EXCEEDS THE DESIGN LOAD FOR THE BUILDING OPENING.
4. SUPERIMPOSED LOADS ON THE JAMBS FROM THIS DOOR ARE DESIGNED AS Vx AND Vy HEREIN. CONTRACTORS SHALL HAVE BUILDING ENGINEER VERIFY ADEQUACY OF BUILDING STRUCTURE TO RESIST SUPERIMPOSED LOADS Vx, Vy
5. ALL WELDING SHALL BE PERFORMED BY QUALIFIED WELDERS IN ACCORDANCE WITH AWS SPECIFICATIONS, LATEST EDITION. ALL WELDING ELECTRODES SHALL CONFORM TO AWS A5.1 GRADE E-70.
6. ALL BOLTS AND WASHERS SHALL BE GALVANIZED OR STAINLESS STEEL WITH A MINIMUM TENSILE STRENGTH OF 60 KSI.
7. DESIGN BASED ON CERTIFIED TESTING LABORATORIES, INC., TEST REPORT NO. CTLA 2008W-1 DATED FEBRUARY 9, 2010 (STATIC PRESSURE)
8. ANCHOR NOTES:
   A. EMBEDMENT LENGTH DOES NOT INCLUDE STUCCO FINISH.
   B. ANCHORS SHALL BE INSTALLED IN ACCORDANCE WITH MANUFACTURER'S SPECIFICATIONS.
9. DOOR OPERATION TYPE TO BE PUSH-UP, HAND CHAIN, HAND CRANK OR ELECTRIC.
10. GUIDE TO JAMB ATTACHMENT FASTENERS IN OPENING AREA BEGIN 4 MIN/6 MAX FROM FLOOR AND END 4 BELOW TOP OF WALL OPENING.
11. TEST DOOR WALL OPENING SIZE: 16'-4" x 10'-0".
12. WINDLOCKS ATTACHED TO EVERY OTHER SLAT BEGINNING AT BOTTOM SLAT (ALTERNATING). WINDLOCKS FASTENED TO SLATS UTILIZING TWO 1/4 DIAMETER ZINC PLATED STEEL BLIND RIVETS PER WINDLOCK.
13. INSULATION MATERIAL: FOAM IN PLACE POLYURETHANE.
14. ALTERNATE BACK COVER GAUGE OF 22 (.0296) MAY BE SUBSTITUTED.
15. FOR 24 GAUGE SLAT/24 GAUGE BACK COVER, Vy = +/-415 PLF.
    FOR 22 GAUGE SLAT/24 GAUGE BACK COVER, Vy = +/-426 PLF.
    FOR 20 GAUGE SLAT/24 GAUGE BACK COVER, Vy = +/-434 PLF.
    FOR 18 GAUGE SLAT/24 GAUGE BACK COVER, Vy = +/-446 PLF.

CERTIFIED WIND LOAD RATED
SERIES ID25 ANGLE GUIDES ROLL-UP DOOR ASSEMBLY
I8265 INSULATED SLAT ASSEMBLY
MAX. SIZE 24'-4" X 30'-0"

UNLESS OTHERWISE SPECIFIED, DIMENSIONS ARE IN INCHES AND TOLERANCES ARE:
ANGLES ± 0° 30'
DECIMAL .XX ±.03, .XXX ±.005
FRACTIONS ± 1/16
HOLE DIAMETERS: UNDER .251 +.004 -.003; .251 TO .500 +.006 -.003; OVER .500 +.008 -.003

APPROVALS	DATE	APPROVALS	DATE
DRAWN BECKY NELSON	1-22-10	APPROVED DON MILLS	2-9-10
CHECKED DON MILLS	2-9-10		

THESE CONFIDENTIAL DOCUMENTS SUBMITTED BY JANUS CONTAIN INFORMATION OF A PROPRIETARY NATURE AND MAY NOT BE REPRODUCED OR USED TO MANUFACTURE ANYTHING IN PART OR IN WHOLE FOR ANY PURPOSE OTHER THAN THAT WHICH IS NECESSARY FOR PREPARATION OF BIDS OR ENGINEERING WITHOUT THE EXPRESS PERMISSION OF JANUS WHICH MAY RECALL DOCUMENTS AT ANY TIME.

PART NUMBER	DRAWING NUMBER	
NA	RS9008	
MATERIAL NA	FINISH NA	
UNIT OF MEASURE NA	SIZE B	SCALE NONE
SHEET 2 OF 2	REV —	

JANUS INTERNATIONAL CORPORATION®
134 Janus International Blvd. Temple, GA 30179
770-562-2850/Fax 770-562-1991
© 2010 Janus International Corporation All Rights Reserved

STATE OF TEXAS
JOSEPH H. DIXON, JR.
18627
LICENSED
PROFESSIONAL ENGINEER

10/2/10