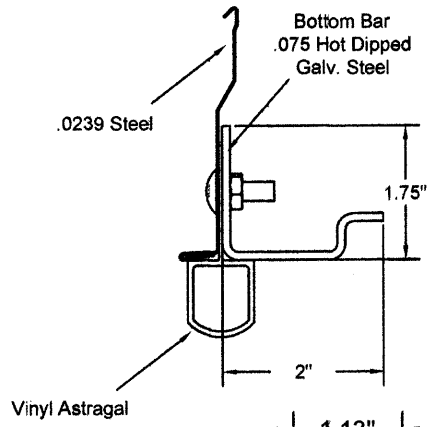

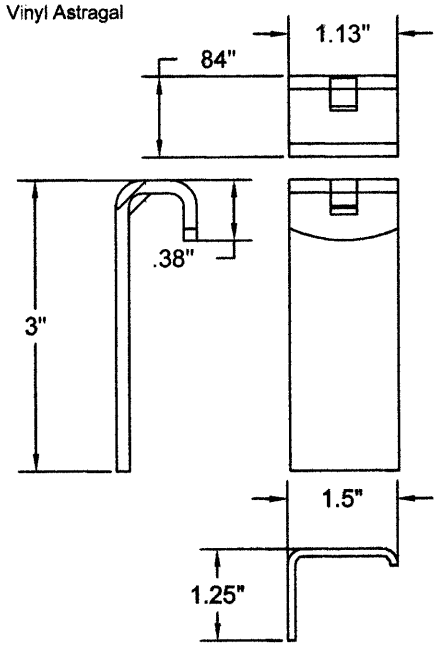

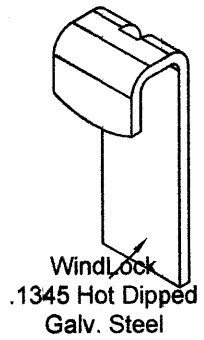

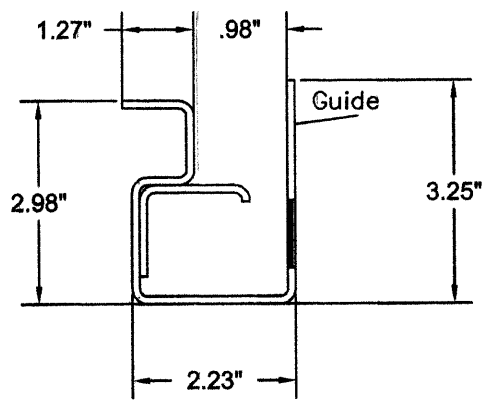

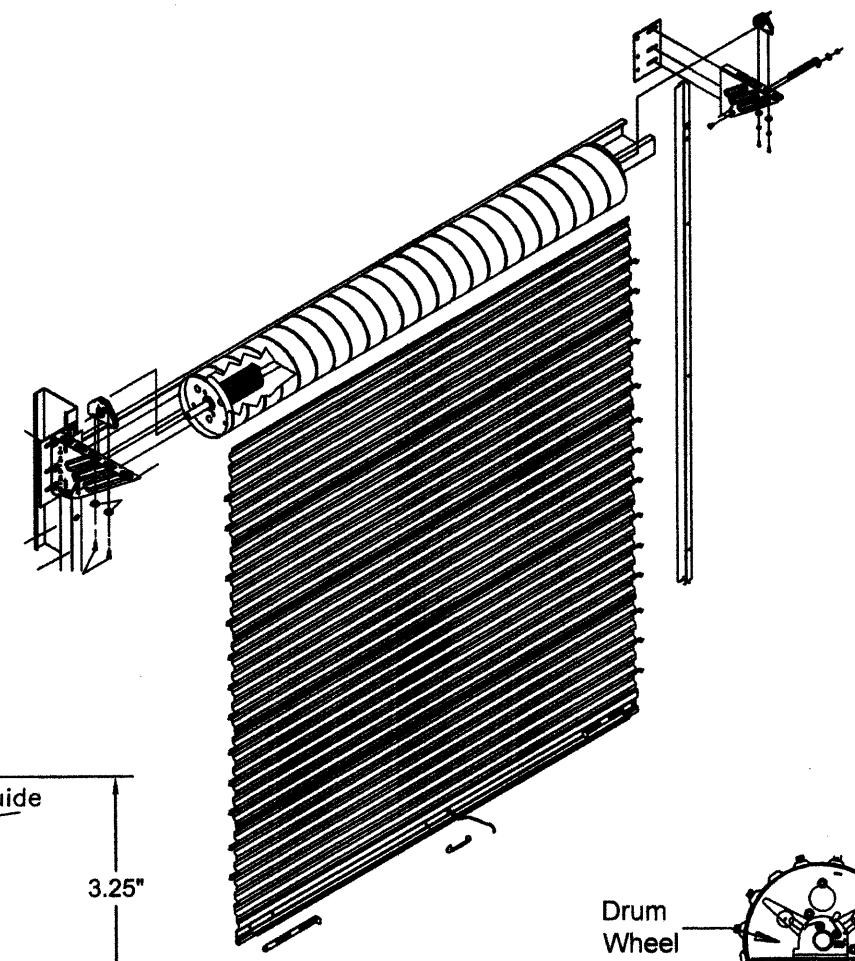

Opening Height
Up to 16'-0"

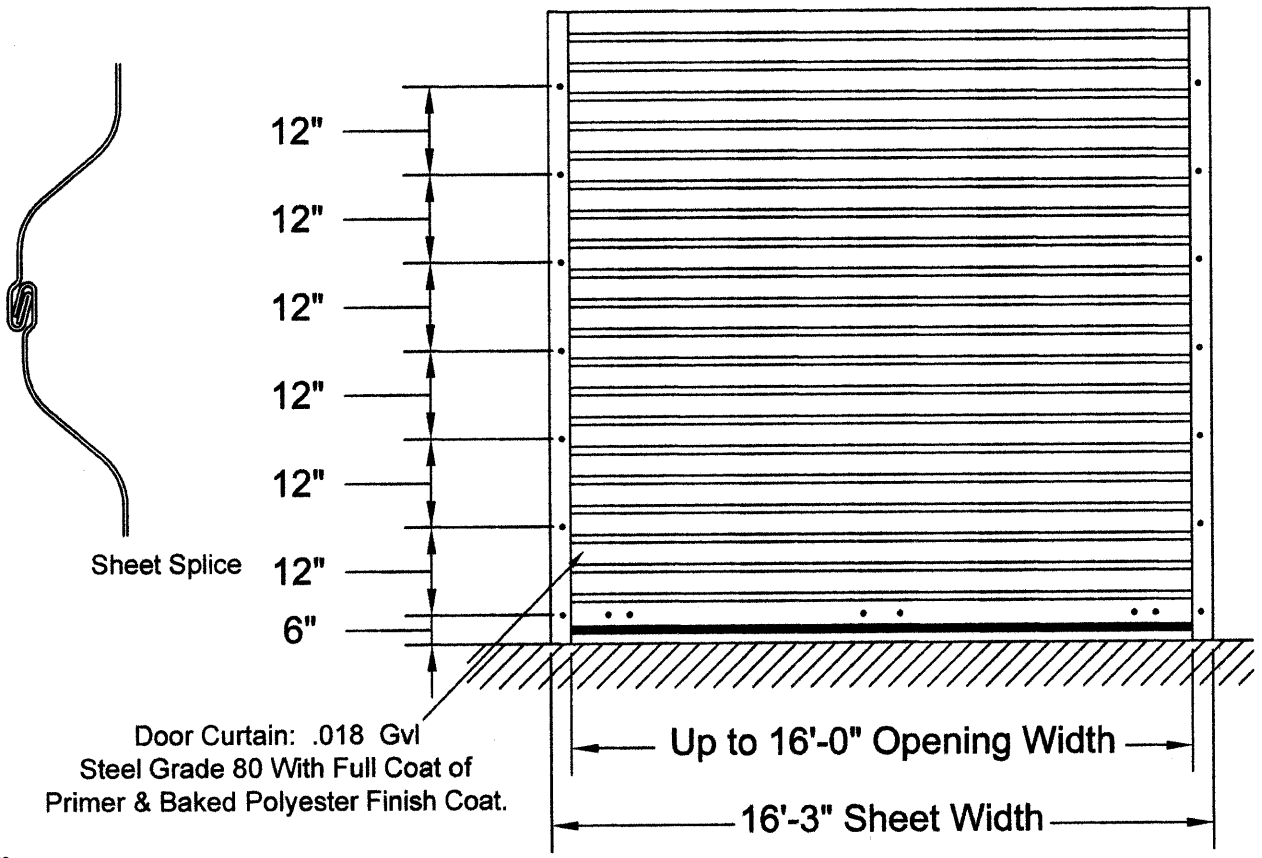

Non Impact Pressure Test

MODEL	MAXIMUM DOOR WIDTH	MAXIMUM DOOR HEIGHT	DESIGN LOAD POSITIVE PSF	DESIGN LOAD NEGATIVE PSF
W300	16'-0"	16'-0"	32.2	36.5

Pressures per ASCE 7-05 and ANSI/DASMA 108-2005
Date of Test Sep. 14, 2009

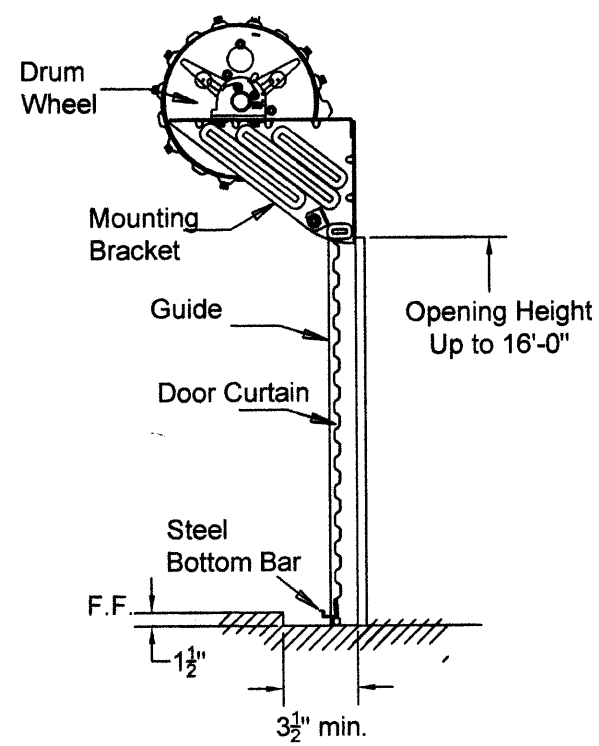

Note: Windlocks from .1345 Galv Steel
& Riveted to Alternate Corrugations with
2 Steel Rivetes

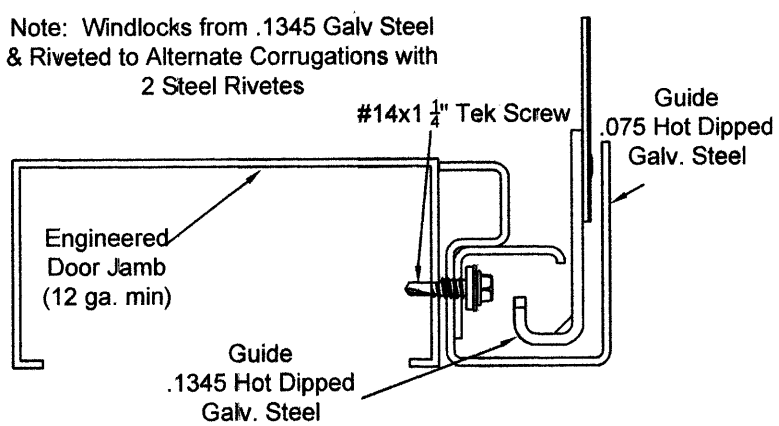

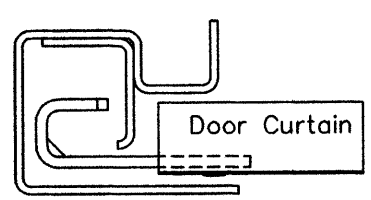

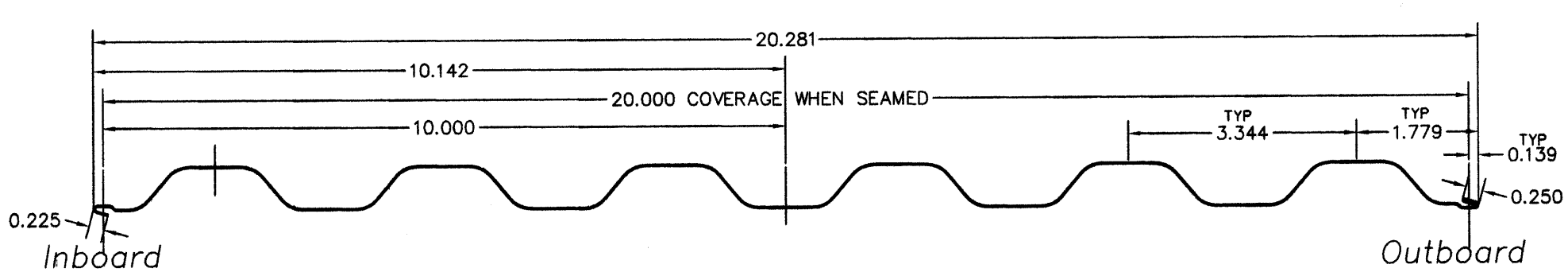

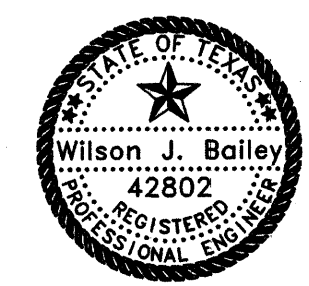

Expiration Date:
12/31/2011

Engineered Building Systems, Inc.
Texas Registration: F-10779
1700 Rivercrest Dr. #1122
Sugar Land, TX 77478
(281) 520-0336

Date Sealed:
2/3/2011

MUELLER, INC.
STEEL BUILDING SYSTEMS & COMPONENTS

1913 Hutchings Ave. Ballinger, TX 76821
800-527-1087 325-365-2571

DESCRIPTION	W300 MODEL WINDLOCK ROLL UP DOOR						
SIZE	16'-0 Max Width, 16'-0 Max Height					ROOF SLOPE NA	
CUSTOMER	Standard						
LOCATION	Varies						
DRN. BY	CK'D BY	DATE	SCALE	SALESMAN	JOB NO.	SHEET NO.	REV.
DM/WJB		2/3/2011	NONE	NA	Standard	W300-1	0