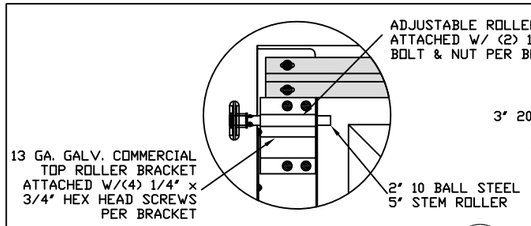

TYPICAL TOP FIXTURES (1)
N.T.S.

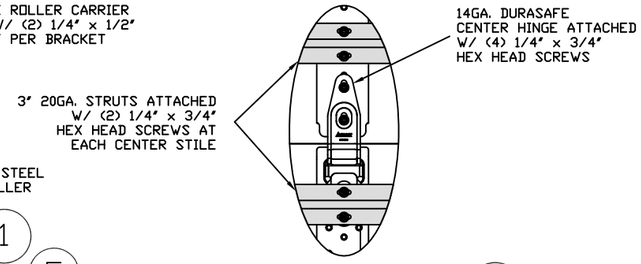

TYPICAL DURASAFE CENTER HINGE (2)
N.T.S.

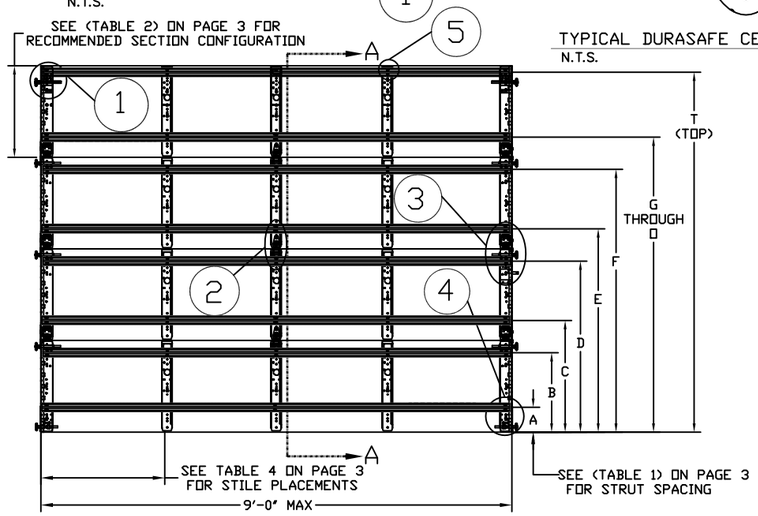

INSIDE ELEVATION
N.T.S.

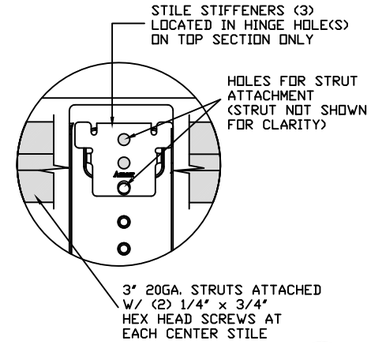

TYPICAL STILE STIFFENER (5)
N.T.S.

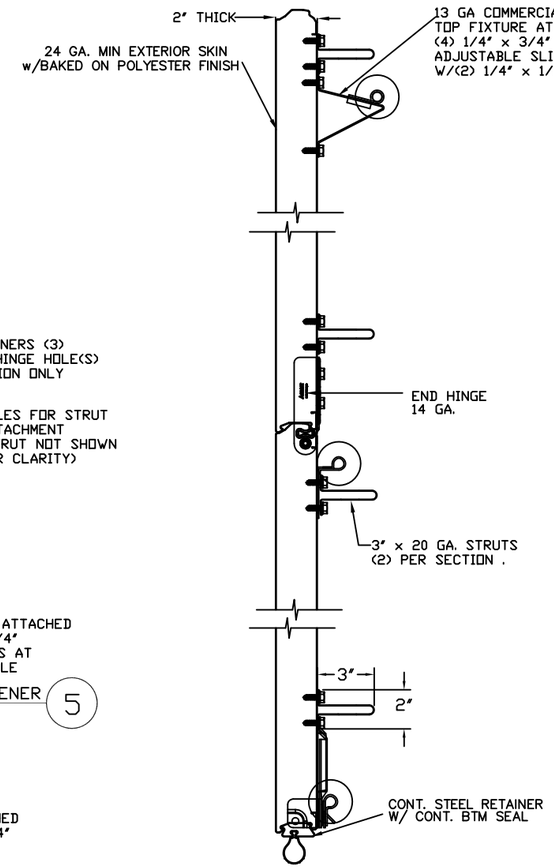

SECTION A–A (SIDE VIEW)
N.T.S.

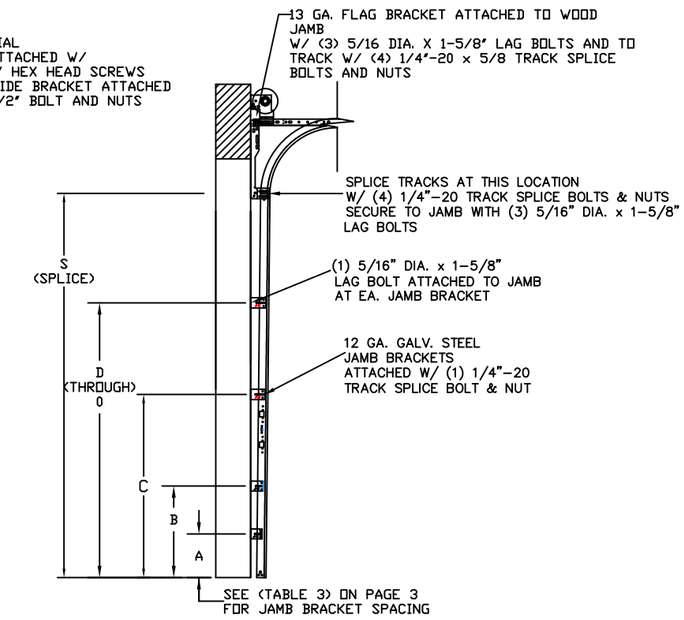

TRACK CONFIGURATION FOR 6'6" UP TO 14' TALL DOORS

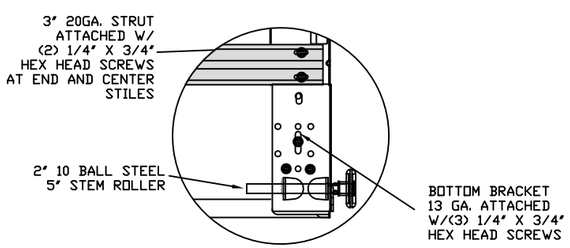

TYPICAL BOTTOM BRACKET (4)
N.T.S.

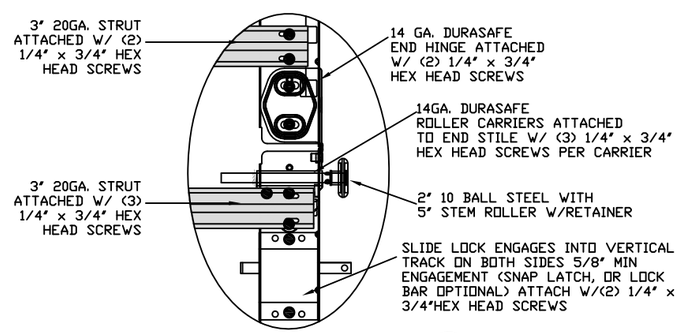

TYPICAL DURASAFE END HINGE (3)
N.T.S.

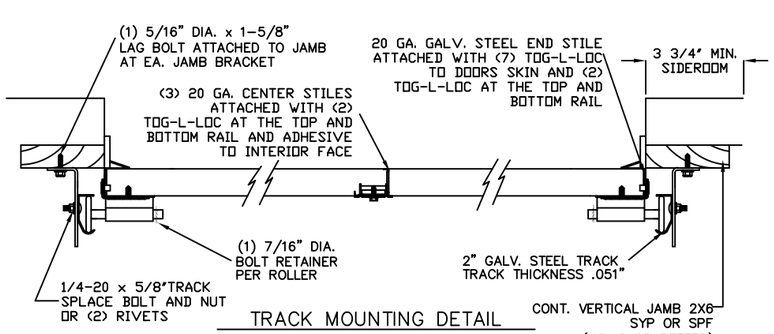

TRACK MOUNTING DETAIL
N.T.S.

THE METHOD OF TESTING WAS IN SUBSTANTIAL CONFORMANCE WITH THE PROCEDURE DESCRIBED IN ASTM E330 AND DASMA 108. THE PRESSURES SHOWN ON THE DRAWINGS WERE CALCULATED USING ASCE 7-98/02/05 WITH THE FOLLOWING PARAMETERS (5 FEET OF DOOR WIDTH IN THE END ZONE, ROOF AT ANY SLOPE, AND I=1.0):

WIND SPEED (MPH)	166	150	143	136	131
EXPOSURE LEVEL	B	C	C	D	D
MEAN ROOF HEIGHT	30'	15'	25'	15'	25'

LARGE MISSLE IMPACT RESISTANCE

INTERIOR OF GARAGE

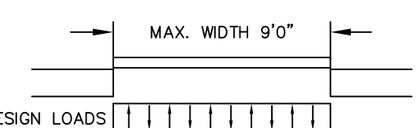

DESIGN LOADS
+203.9 LBS/FT
−230.4 LBS/FT

SEE NOTE 2 PAGE 2

REV	DESCRIPTION OF REVISIONS	DATE	BY
A	AFFIRMATION TO 2007 FBC, MODEL 655 & PG3 ADDED	06/11/08	SKW
B	WIND SPEED TABLE & TRACK CONFIGURATIONS	5/1/12	RLR

MAX SIZE
9' x 14'

DESIGN LOADS
+45.3 PSF
−51.2 PSF

LARGE MISSLE IMPACT RESISTANCE

STATE OF TEXAS
06/28/2012
THOMAS L. SHELMERDINE
85829
LICENSED
PROFESSIONAL ENGINEER

Amarr
165 CARRIAGE COURT WINSTON-SALEM, N.C. 27105 WWW.AMARR.COM

MODEL 950 HERITAGE (24 GA) 1000, 2000
MODEL 655 OAK SUMMIT (24 GA) 1000, 2000
SHORT, LONG, FLUSH, AND OAK SUMMIT PANELS

SIZE	DRAWN BY DLJ	DATE 03/12/03	DRAWING NUMBER
B	CHECKED BY AAE	DATE 03/12/03	IRC-9509-169-15
ENGINEER: THOMAS L. SHELMERDINE P.E. LIC. No. 0048579			SHEET 1 OF 3

WOOD JAMB ATTACHMENT TO STRUCTURE

2 X 6 VERTICAL JAMB ATTACHMENT TO WOOD FRAME STRUCTURE
5/16" X 3" LAG SCREWS STARTING 6" FROM ENDS THEN 24" O.C. (1 1/2" EMBEDMENT)

2 X 6 VERTICAL JAMB ATTACHMENT TO 2,000 PSI CONCRETE
HILTI KWIK BOLT 3/8" X 4" STARTING 6" FROM ENDS THEN 24" O.C. (2 1/2" EMBEDMENT)
HILTI SLEEVE ANCHOR 3/8" X 2-3/4" STARTING 6" FROM ENDS THEN 20" O.C. (1 1/4" EMBEDMENT)
ITW/RAMSET REDHEAD (TRU-BOLT) 3/8" X 4" STARTING 6" FROM ENDS THEN 24" O.C. (2 1/2" EMBEDMENT)

2 X 6 VERTICAL JAMB ATTACHMENT TO HOLLOW C-90 BLOCK
SIMPSON 1/4" X 3" TITEN SCREWS STARTING 6" FROM ENDS, USE PAIRS OF FASTENERS (3" APART) AT 16" O.C. (1 1/2" EMBEDMENT)
HILTI 1/4" X 2-3/4" KWIK-CON II+ SCREWS STARTING 6" FROM ENDS, USE PAIRS OF FASTENERS (3" APART) AT 16" O.C. (1 1/4" EMBEDMENT)

2 X 6 VERTICAL JAMB ATTACHMENT TO GROUTED C-90 BLOCK (2000 PSI GROUT)
HILTI SLEEVE ANCHOR 3/8" X 2-3/4" STARTING 6" FROM ENDS THEN 24" O.C. (1 1/4" EMBEDMENT) (OR, USE FASTENERS FOR HOLLOW C-90 BLOCK)

*LAGS AND BOLTS CAN BE COUNTERSUNK TO PROVIDE A FLUSH MOUNTING SURFACE.
*PREPARATION OF WOOD JAMBS BY OTHERS

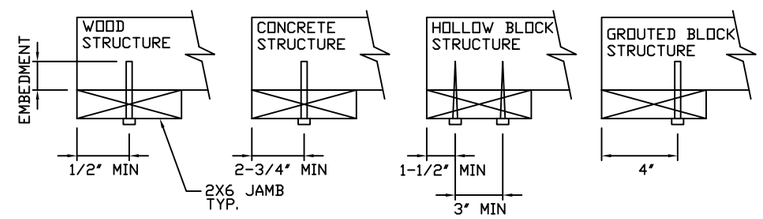

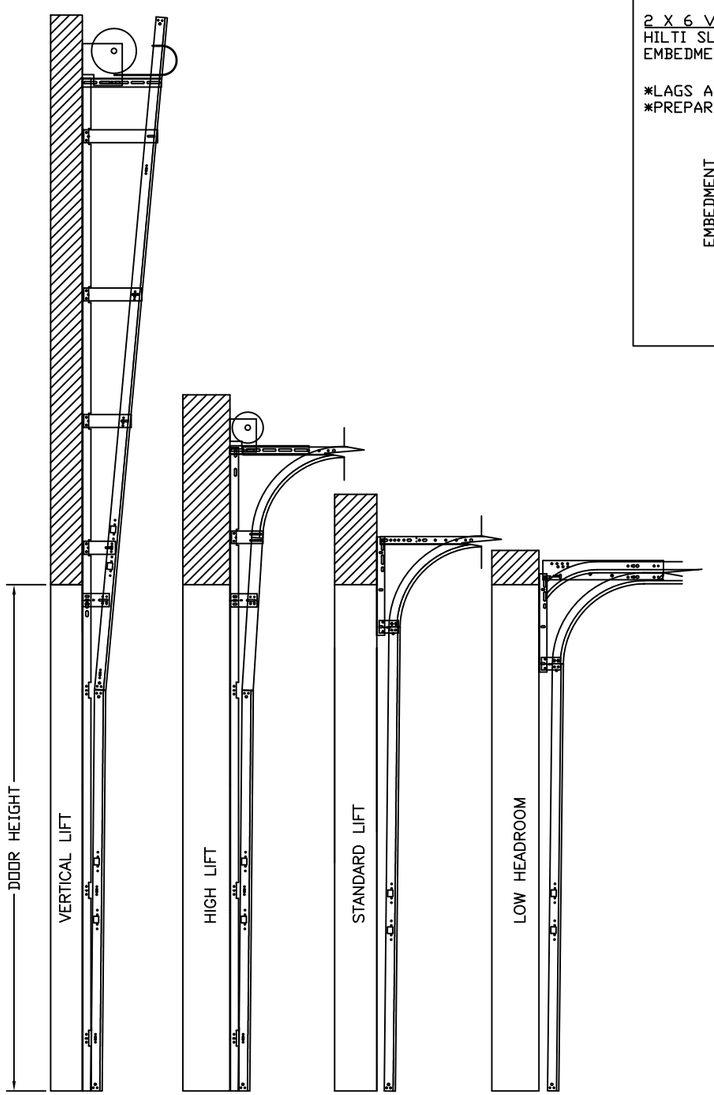

AVAILABLE TRACK CONFIGURATIONS
N.T.S.

SPECIFICATIONS AND NOTES

1. ALL THE LOAD FROM THE DOOR IS TRANSFERRED TO THE VERTICAL TRACK, FROM THE TRACK THE LOAD IS TRANSFERRED TO THE VERTICAL JAMBS. THE HORIZONTAL JAMB OR HEADER RECEIVES NO PORTION OF THE LOAD TRANSFERRED FROM THE DOOR.
2. EACH VERTICAL JAMBS RECEIVES MAXIMUM DESIGN LOADS OF: +203.9 LBS/FT & −230.4 LBS/FT
3. DOOR AND HARDWARE WILL BE DESIGNED, MANUFACTURED AND INSTALLED WITH STANDARDS AS SET FORTH BY DASMA.
4. DOOR SECTIONS SHALL BE 24 GA. (.024) MIN. EXTERIOR SKIN ROLLED FORMED, W/ BAKED ON POLYESTER FINISH
5. DOORS UP TO 7'0" HIGH CONSIST OF (4) SECTIONS AS SHOWN. USE (2) 3" 20 GA STRUTS PER SECTION
6. DOORS OVER (4) SECTIONS REFER TO TABLES 1 AND 2 ON PAGE 3
7. SUPPORTING STRUCTURAL ELEMENTS SHALL BE DESIGNED BY A REGISTRED PROFESSIONAL ENGINEER FOR WIND LOADS INDICATED ON THIS DRAWING IN ADDITION TO OTHER LOADINGS.

REV	DESCRIPTION OF REVISIONS	DATE	BY
A	AFFIRMATION TO 2007 FBC, MODEL 655 & PG3 ADDED	06/11/08	SKW
B	WIND SPEED TABLE & TRACK CONFIGURATIONS	5/1/12	RLR

MAX SIZE
9' x 14'

DESIGN LOADS
+45.3 PSF
−51.2 PSF

LARGE MISSLE IMPACT RESISTANCE

STATE OF TEXAS
06/28/2012
THOMAS L. SHELMERDINE
85829
LICENSED
PROFESSIONAL ENGINEER

Amarr

165 CARRIAGE COURT WINSTON-SALEM, N.C. 27105 WWW.AMARR.COM

MODEL 950 HERITAGE (24 GA) 1000, 2000
MODEL 655 OAK SUMMIT (24 GA) 1000, 2000
SHORT, LONG, FLUSH, AND OAK SUMMIT PANELS

SIZE	DRAWN BY DLJ	DATE 03/12/03	DRAWING NUMBER
B	CHECKED BY AAE	DATE 03/12/03	IRC-9509-169-15

ENGINEER: THOMAS L. SHELMERDINE P.E. LIC. No. 0048579 | SHEET 2 OF 3

TABLE 1

DOOR HEIGHT	STRUT SPACING (BASED ON RECOMMENDED SECTION CONFIGURATION)															TOP
	A	B	C	D	E	F	G	H	I	J	K	L	M	N	O	T
6' 6"	5 1/2"	18"	25 3/8"	36"	43 3/8"	54"	61 3/8"									76 1/4"
7'	5 1/2"	18"	25 3/8"	39"	46 3/8"	60"	67 3/8"									82 1/4"
7' 6"	5 1/2"	15"	22 3/8"	33"	40 3/8"	51"	58 3/8"	69"	76 3/8"							88 1/4"
8'	5 1/2"	18"	25 3/8"	36"	43 3/8"	54"	61 3/8"	72"	79 3/8"							94 1/4"
8' 6"	5 1/2"	18"	25 3/8"	39"	46 3/8"	60"	67 3/8"	78"	85 3/8"							100 1/4"
9'	5 1/2"	15"	22 3/8"	33"	40 3/8"	51"	58 3/8"	69"	76 3/8"	87"	94 3/8"					106 1/4"
9' 6"	5 1/2"	18"	25 3/8"	36"	43 3/8"	54"	61 3/8"	72"	79 3/8"	90"	97 3/8"					112 1/4"
10'	5 1/2"	18"	25 3/8"	39"	46 3/8"	60"	67 3/8"	78"	85 3/8"	96"	103 3/8"					118 1/4'
10' 6"	5 1/2"	18"	25 3/8"	39"	46 3/8"	60"	67 3/8"	81"	88 3/8"	102"	109 3/8"					124 1/4"
11'	5 1/2"	18"	25 3/8"	36"	43 3/8"	54"	61 3/8"	72"	79 3/8"	90"	97 3/8"	108"	115 3/8"			130 1/4"
11' 6"	5 1/2"	18"	25 3/8"	39"	46 3/8"	60"	67 3/8"	78"	85 3/8"	96"	103 3/8"	114"	121 3/8"			136 1/4"
12'	5 1/2"	18"	25 3/8"	39"	46 3/8"	60"	67 3/8"	81"	88 3/8"	102"	109 3/8"	120"	127 3/8"			142 1/4"
12'6"	5 1/2"	18"	25 3/8"	36"	43 3/8"	54"	61 3/8"	72"	79 3/8"	90"	97 3/8"	108"	115 3/8"	126"	133 3/8"	148 1/4"
13'	5 1/2"	18"	25 3/8"	39"	46 3/8"	60"	67 3/8"	78"	85 3/8"	96"	103 3/8"	114"	121 3/8"	132"	139 3/8"	154 1/4"
13' 6"	5 1/2"	18"	25 3/8"	39"	46 3/8"	60"	67 3/8"	81"	88 3/8"	102"	109 3/8"	120"	127 3/8"	138"	145 3/8"	160 1/4'
14'	5 1/2"	18"	25 3/8"	39"	46 3/8"	60"	67 3/8"	81"	88 3/8"	102"	109 3/8"	123"	130 3/8"	144"	151 3/8"	166 1/4"

TABLE 4

Section Width (ft)	Panel Type	Center Stile Location (Measured from Left Edge) 1st (in)	2st (in)	3rd (in)
8' 0	Short	24.812	48.000	71.188
8' 0	Long	24.000	48.000	72.000
8' 0	Bead	24.625	48.000	71.375
8' 2	Short	24.316	49.000	73.684
8' 2	Long	24.500	49.000	73.500
8' 2	Bead	25.125	49.000	72.875
8' 4	Short	24.580	50.000	75.420
8' 4	Long	25.000	50.000	75.000
8' 4	Bead	25.625	50.000	74.375
8' 6	Short	26.029	51.000	75.971
8' 6	Long	25.500	51.000	76.500
8' 6	Bead	26.125	51.000	75.875
8' 8	Short	26.659	52.000	77.341
8' 8	Long	26.000	52.000	78.000
8' 8	Bead	26.625	52.000	77.375
8' 10	Short	27.034	53.000	78.966
8' 10	Long	26.500	53.000	79.500
8' 10	Bead	27.125	53.000	78.875
9' 0	Short	27.596	54.000	80.404
9' 0	Long	27.000	54.000	81.000
9' 0	Bead	27.625	54.000	80.375

TABLE 2

DOOR HEIGHT	SECTION HEIGHTS							
	Btm	#2	#3	#4	#5	#6	#7	#8
14' 0"	21"	21"	21"	21"	21"	21"	21"	21"
13' 6"	21"	21"	21"	21"	21"	18"	18"	21"
13' 0"	21"	21"	21"	18"	18"	18"	18"	21"
12' 6"	21"	18"	18"	18"	18"	18"	18"	21"
12' 0"	21"	21"	21"	21"	21"	18"	21"	
11' 6"	21"	21"	21"	18"	18"	18"	21"	
11' 0"	21"	18"	18"	18"	18"	18"	21"	
10' 6"	21"	21"	21"	21"	21"	21"		
10' 0"	21"	21"	21"	18"	18"	21"		
9'6"	21"	18"	18"	18"	18"	21"		
9' 0"	18"	18"	18"	18"	18"	18"		
8' 6"	21"	21"	21"	18"	21"			
8' 0"	21"	18"	18"	18"	21"			
7' 6"	18"	18"	18"	18"	18"			
7' 0"	21"	21"	21"	21"				
6' 6"	21"	18"	18"	21"				

TABLE 3

DOOR HEIGHT	TRACK ATTACHMENT								SPLICE
	A	B	C	D	E	F	G	H	S
6' 6"	10"	21"	39"	57"					70"
7'	10"	21"	42"	63"					76"
7' 6"	10"	18"	36"	54"	72"				82"
8'	10"	21"	39"	57"	75"				88"
8' 6"	10"	21"	42"	63"	81"				94"
9'	10"	18"	36"	54"	72"	90"			100"
9' 6"	10"	21"	39"	57"	75"	93"			106"
10'	10"	21"	42"	63"	81"	99"			112"
10' 6"	10"	21"	42"	63"	84"	105"			118"
11'	10"	21"	39"	57"	75"	93"	111"		124"
11' 6"	10"	21"	42"	63"	81"	99"	117"		130"
12'	10"	21"	42"	63"	84"	105"	123"		136"
12'6"	10"	21"	39"	57"	75"	93"	111"	129"	142"
13'	10"	21"	42"	63"	81"	99"	117"	135"	148"
13' 6"	10"	21"	42"	63"	84"	105"	123"	141"	154"
14'	10"	21"	42"	63"	84"	105"	126"	147"	160"

ALL TRACK ATTACHMENT SPACING +/– 1.5" ALLOWED WITH SYP OR SPF NO. 2 OR BETTER

REV	DESCRIPTION OF REVISIONS	DATE	BY
A	AFFIRMATION TO 2007 FBC, MODEL 655 & PG3 ADDED	06/11/08	SKW
B	WIND SPEED TABLE & TRACK CONFIGURATIONS	5/1/12	RLR

MAX SIZE
9' x 14'

DESIGN LOADS
+45.3 PSF
–51.2 PSF

LARGE MISSLE IMPACT RESISTANCE

STATE OF TEXAS
06/28/2012
THOMAS L. SHELMERDINE
85829
LICENSED
PROFESSIONAL ENGINEER

Amarr

165 CARRIAGE COURT WINSTON-SALEM, N.C. 27105 WWW.AMARR.COM

MODEL 950 HERITAGE (24 GA) 1000, 2000
MODEL 655 OAK SUMMIT (24 GA) 1000, 2000
SHORT, LONG, FLUSH, AND OAK SUMMIT PANELS

SIZE	DRAWN BY DLJ	DATE 03/12/03	DRAWING NUMBER
B	CHECKED BY AAE	DATE 03/12/03	IRC–9509–169–15

ENGINEER: THOMAS L. SHELMERDINE P.E. LIC. No. 0048579 | SHEET 3 OF 3