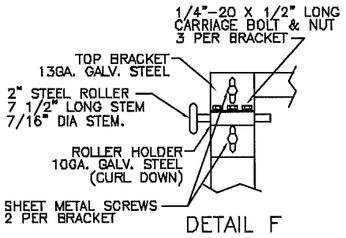

DETAIL F

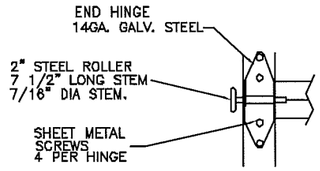

DETAIL G

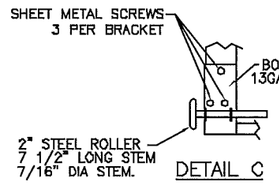

DETAIL C

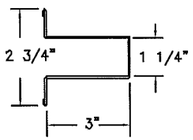

DETAIL D

3" 18GA. (0.44") WIDE STRUT

STRUTTING SCHEDULE:	1 per Bottom Section–Centered 1 per Top Section–Centered 1 per Every Other Intermediate Section–Centered

NOTE: UNLESS SPECIFIED OTHERWISE, ALL FASTENERS ARE 1/4"–14 X 3/4" HEX HEAD SHEET METAL SCREWS OR 1/4" X 3/4" HEX HEAD SELF DRILLING SCREWS.

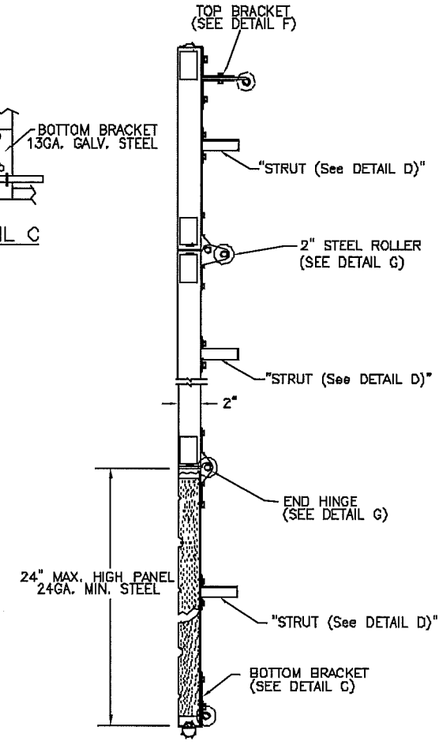

SECTION A–A

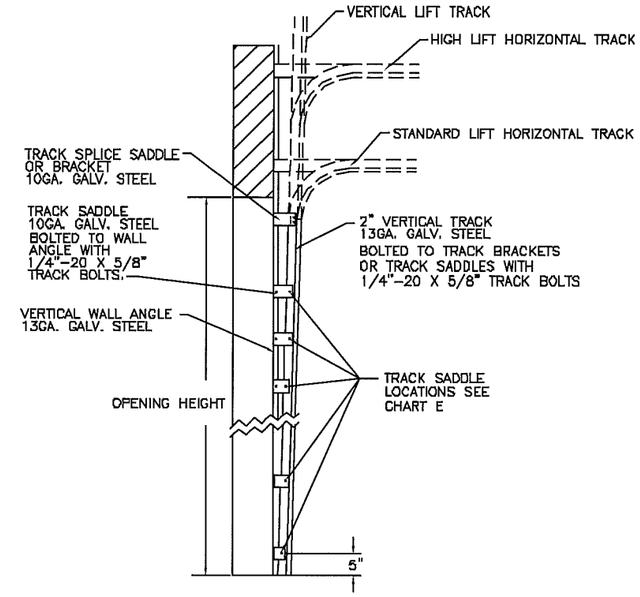

CHART E		
Door Ht.	No. of Track Saddles	TRACK SADDLE LOCATIONS
8'–0"	4	5", 29", 53", 75"
9'–0"	4	5", 29", 53", 75"
10'–0"	5	5", 29", 53", 75", 101",
12'–0"	6	5", 29", 53", 75", 101", 125"
14'–0"	7	5", 29", 53", 75", 101", 125", 149"
16'–0"	8	5", 29", 53", 75", 101", 125", 149", 173"

NOTE: Anchor bolts are located 3/4" above centerline of track saddle. One anchor bolt per track saddle

FOR WOOD MOUNTING
Wood species: Spruce–Pine–Fir (S.G. 0.44) or better
Wood quality: Free of knots/splits at fastener locations.
Fastener: 5/16 Lag Screws x 1 5/8 long or as needed for 1.5" penetration min.
Fasteners edge distance 0.5" minimum.
Pre–drill pilot holes to prevent splitting.

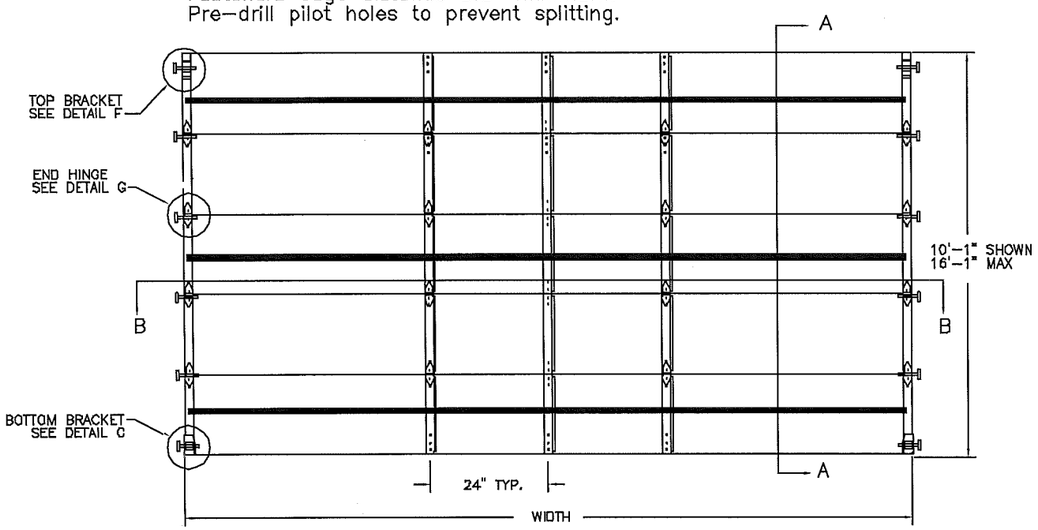

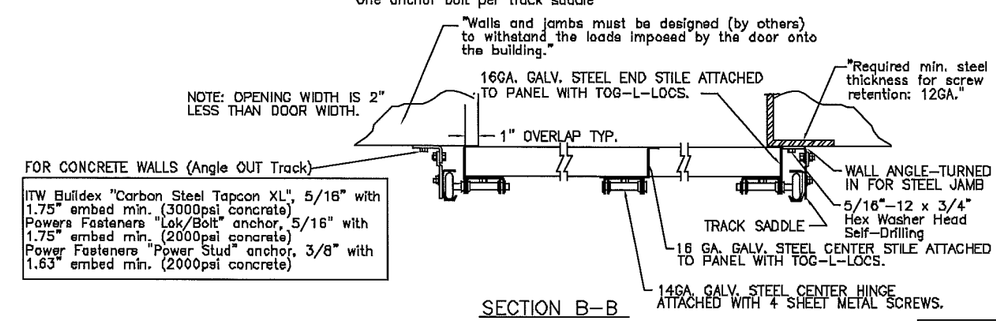

SECTION B–B

FL 15062

DOOR SIZE		NO. OF CEN. STILES	STILE SPACING	P.S.F. TABLE DESIGN PRESSURE	
WIDTH	HEIGHT			POSITIVE	NEGATIVE
8'–2"	16'–1"	2	24"	+25.5	–28.5
9'–2"				+25.5	–28.5
10'–2"	16'–1"	3		+20.7	–23.1

PRESSURES TABULATED ARE BASED ON TESTS OF MODEL 240 (24ga. Panel) MODEL 200 (20ga. Panel) WILL WITHSTAND EQUAL OR HIGHER PRESSURES

REV.	DATE	CHANGE
A	12/15/11	NEW LOGO/ENG. STAMP

John E Scates PE
3121 FAIRGATE DR.
Carrollton, TX 75007
TX–PE 56308–F2203
FL–PE–51737
(972) 492–9500

STATE OF TEXAS
JOHN E. SCATES
56308
REGISTERED
PROFESSIONAL ENGINEER

John E Scates
10/19/12

Professional Engineer's seal provided only for verification of windload construction details.

WINDSOR DOOR

5800 SCOTT
HAMILTON DR.
LITTLE ROCK, AR
72209
(501) 562–1872

MODELS: MODEL 240(24GA.)/200(20GA.) ALTERNATING STRUTS

PART NAME: 10'–2" x 16'–1"
DESIGN LOAD +20.7 –23.1

TOLERANCE
FRAC. ± 1/64"
DEC. ± .015
ANG. ± 1°

NEXT LEVEL

DATE: 12–02–09

DWG. NO. 99–B–094 REV. A

SCALE NONE

PLOT SCALE

DRN. BY BNB

SHT 1 OF 1