| REVISIONS | | | |
|---|---|---|---|
| REV | DESCRIPTION | DATE | APPROVAL |
| — | DRAWING RELEASE | 11-14-02 | DM |
| A | NOTE REVISIONS | 4-16-04 | DM |
| B | NOTE REVISIONS | 6-17-09 | CS |
| C | RE-TEST 9-26-13 | 10-24-13 | CS |

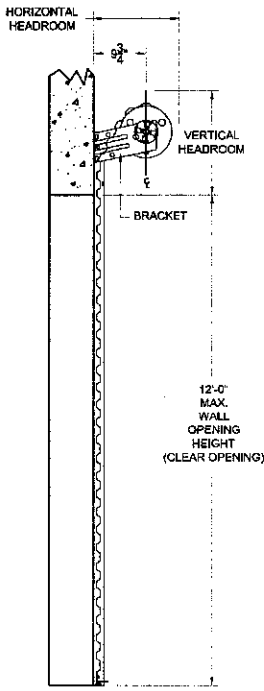


SIDE VIEW

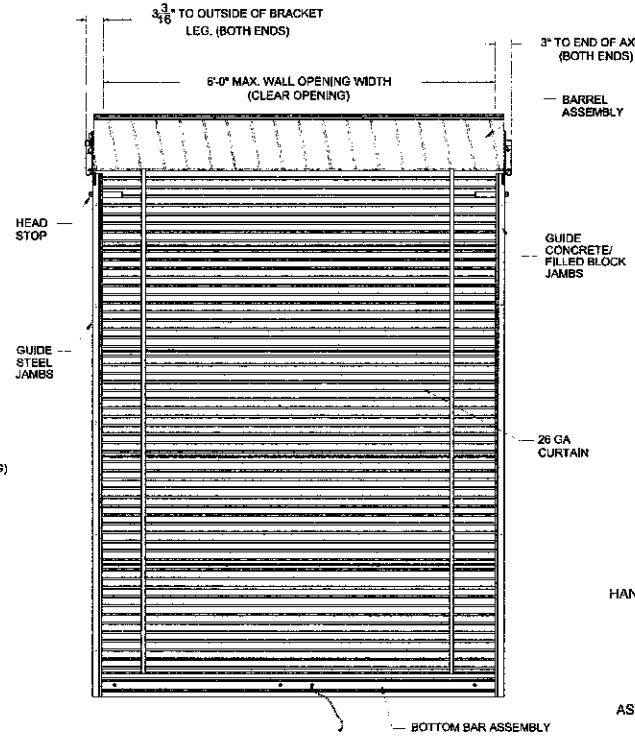


INSIDE ELEVATION

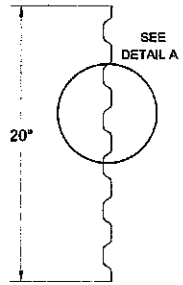


CURTAIN PANEL

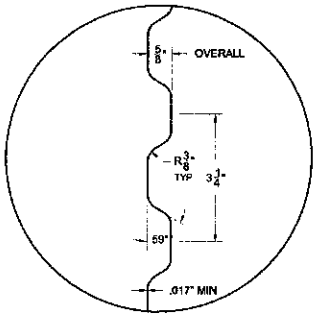


DETAIL A

ASTM A653 GR80 - ZINC COATED STEEL.
PRE-PAINTED WITH FULL COAT OF PRIMER AND BAKED SILICONIZED POLYESTER FINISH COAT

26 GA CURTAIN DETAIL

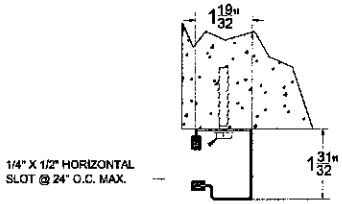


CONCRETE/FILLED BLOCK JAMBS
USING 1/4" X 1-3/4" POWERS WEDGE-BOLT

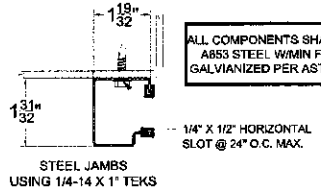


STEEL JAMBS
USING 1/4-14 X 1" TEKS

ALL COMPONENTS SHALL BE ASTM A653 STEEL W/MIN FY = 33 KSI. GALVIANIZED PER ASTM A653 G90

18 GA (.046) GUIDE MOUNTING DETAIL

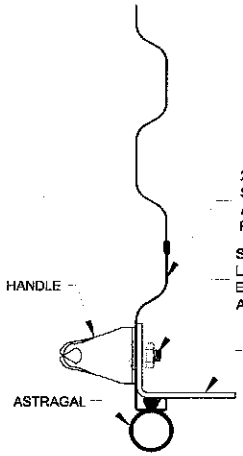


BOTTOM BAR ASSEMBLY

HEADROOM REQUIRED

| OPENING HEIGHT | VERTICAL HEADROOM | HORIZONTAL HEADROOM |
|---|---|---|
| THRU 7'-4" | 15-1/2" | 17-1/2" |
| OVER 7'-4" THRU 8'-8" | 16" | 18" |
| OVER 8'-8" THRU 10'-0" | 17" | 18-1/4" |

SEE SHEET 2 FOR NOTES

THESE CONFIDENTIAL DOCUMENTS SUBMITTED BY JANUS CONTAIN INFORMATION OF A PROPRIETARY NATURE AND MAY NOT BE REPRODUCED OR USED TO MANUFACTURE ANYTHING IN PART OR IN WHOLE FOR ANY PURPOSE OTHER THAN THAT WHICH IS NECESSARY FOR PREPARATION OF BIDS OF ENGINEERING WITHOUT THE EXPRESS PERMISSION OF JANUS WHICH MAY RECALL DOCUMENTS AT ANY TIME.

UNLESS OTHERWISE SPECIFIED DIMENSIONS ARE IN INCHES AND TOLERANCES ARE:

| DECIMAL | FRACTIONS | ANGLES | HOLE DIAMETERS |
|---|---|---|---|
| .XX ±.03<br>.XXX ±.005 | ± 1/16 | ± 0° 30' | UNDER 0.251 +.004 -.003<br>0.251 to 0.500 +.006 -.003<br>OVER 0.500 +.008 -.003 |

PART NUMBER:
MATERIAL:
APPLIED FINISH:
UNIT OF MEASURE:

| APPROVALS | DATE |
|---|---|
| DRAWN: BECKY NELSON | 11-14-02 |
| CHECKED: DON MILLS | 11-14-02 |
| APPROVED: DON MILLS | 11-14-02 |

**JANUS INTERNATIONAL CORPORATION**
135 JANUS INTERNATIONAL BLVD. TEMPLE, GA 30179-4435
770-562-2850/Fax 770-562-2264
© 2013 Janus International Corporation All Rights Reserved

CERTIFIED WIND LOAD RATED
26 GA SERIES 750 DOOR ASSEMBLY
MAX. SIZE: 6'-0" X 12'-0"

SIZE: B | DRAWING NUMBER: T1001 | REV: C
SCALE: NONE | SHEET: 1 OF: 2

STATE OF TEXAS
JOSEPH H. DIXON, JR.
18627
LICENSED
PROFESSIONAL ENGINEER
12/11/13

| REVISIONS | | | |
|---|---|---|---|
| REV | DESCRIPTION | DATE | APPROVAL |
| — | DRAWING RELEASE | 11-14-02 | DM |
| A | NOTE REVISIONS | 4-16-04 | DM |
| B | NOTE REVISIONS | 8-17-09 | CS |
| C | RE-TEST 9-26-13 | 10-24-13 | CS |

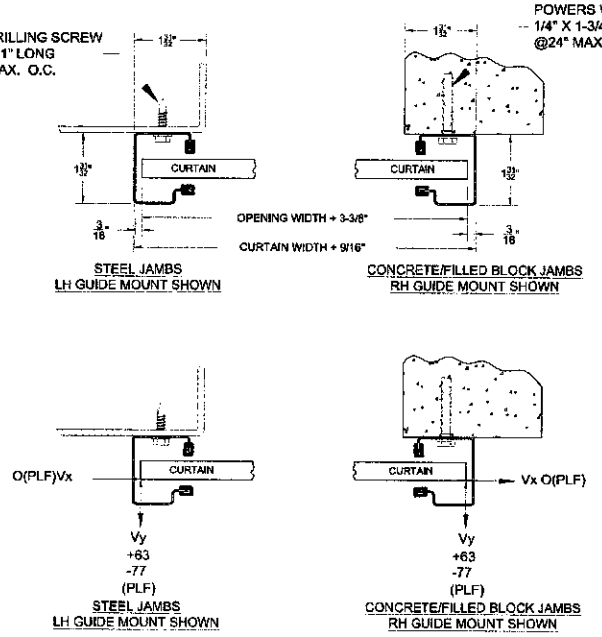


SUPERIMPOSED LOAD DIAGRAM

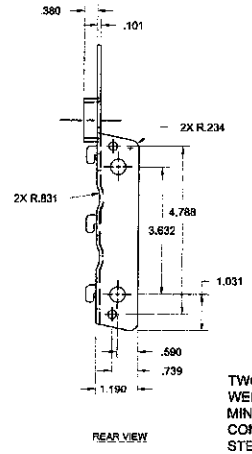


REAR VIEW

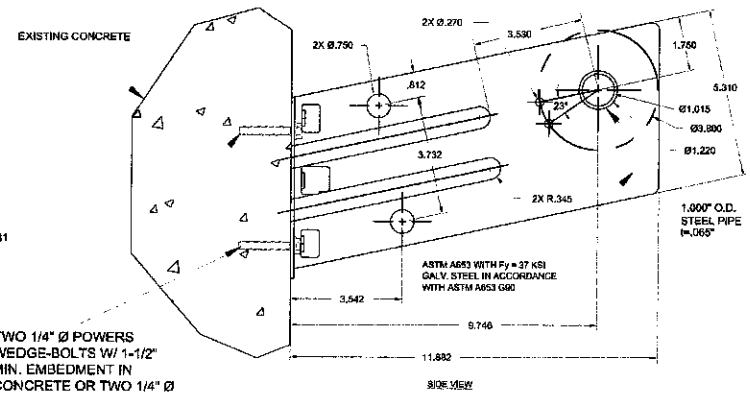


TWO 1/4" Ø POWERS WEDGE-BOLTS W/ 1-1/2" MIN. EMBEDMENT IN CONCRETE OR TWO 1/4" Ø STEEL SCREWS W/ FULL PENETRATION INTO MIN. 1/8" STEEL. IF EXISTING IS MASONRY, FILL CELL W/ 2500 PSI GROUT.

SIDE VIEW

DOOR MOUNTING BRACKET DETAIL

Comparative forces by calculation to determine design pressure based on maximum moment and shear developed by test, 6' X 8' door

| | Design Windload | | Positive Wind Design | | Negative Wind Design | |
|---|---|---|---|---|---|---|
| | Pos psf | Neg psf | Moment in-lb/ft | Shear lb/ft | Moment in-lb/ft | Shear lb/ft |
| Test Door 6' x 8' Calibration calculations for test door | 19.9 | 24.4 | 1069.6 | 60.1 | 1336.0 | 73.7 |
| Max Door Size (Width x Height) | | | | | | |
| 3'-4" x 12' | 35.6 | 43.7 | 606.7 | 60.1 | 746.3 | 73.7 |
| 3'-6" x 12' | 33.9 | 41.6 | 638.7 | 60.1 | 783.2 | 73.7 |
| 3'-8" x 12' | 32.4 | 39.8 | 668.8 | 60.1 | 820.0 | 73.7 |
| 4'-0" x 12' | 29.7 | 36.5 | 728.9 | 60.1 | 893.7 | 73.7 |
| 5'-0" x 12' | 23.8 | 29.2 | 909.2 | 60.1 | 1114.6 | 73.7 |
| 5'-8" x 12' | 21.7 | 26.6 | 999.4 | 60.1 | 1225.4 | 73.7 |
| 6'-0" x 12' | 19.9 | 24.4 | 1069.6 | 60.1 | 1336.0 | 73.7 |

Design wind forces are calculated to produce moment and shear equal to or less than those developed in the test door. This indicates that the curtain, guides, and jamb anchorages will all be stressed to approximately the same or less than those in the test door, provided that the door is constructed the same for all opening widths.

## GENERAL NOTES

1. THIS ROLL-UP DOOR SYSTEM IS DESIGNED IN ACCORDANCE WITH THE FLORIDA BUILDING CODE.
2. THIS ROLL-UP DOOR HAS BEEN TESTED IN ACCORDANCE WITH ASTM E-330 AND COMPLIES WITH ANSI/DASMA 108.

   DESIGN LOAD = $^{+19.9}_{-24.4}$ PSF
3. WIND LOADS FOR BUILDING OPENINGS SHALL BE DETERMINED BY A PROFESSIONAL ENGINEER USING APPROPRIATE WIND SPEED AND DESIGN CRITERIA. THIS DOOR MAY BE USED WHERE THE DESIGN LOAD MEETS OR EXCEEDS THE DESIGN LOAD FOR THE BUILDING OPENING.
4. SUPERIMPOSED LOADS ON THE JAMBS FROM THIS DOOR ARE DESIGNED AS Vx AND Vy HEREIN. CONTRACTORS SHALL HAVE BUILDING ENGINEER VERIFY ADEQUACY OF BUILDING STRUCTURE TO RESIST SUPERIMPOSED LOADS Vx, Vy, AND BRACKET LOADS SHOWN.
5. ALL WELDING SHALL BE PERFORMED BY QUALIFIED WELDERS IN ACCORDANCE WITH A.W.S. SPECIFICATIONS, LATEST EDITION. ALL WELDING ELECTRODES SHALL CONFORM TO A.W.S. A5.1 GRADE E-70.
6. DOORS SHALL BE PROVIDED WITH LOCK MECHANISMS AT THE OPTION OF THE OWNER.
7. ALL BOLTS AND WASHERS SHALL BE GALVANIZED OR STAINLESS STEEL WITH A MINIMUM TENSILE STRENGTH OF 60 KSI.
8. DESIGN BASED ON ELEMENT MATERIALS TECHNOLOGY TEST REPORT NO. ESP014073P-3.
9. ANCHOR NOTES:
   A. EMBEDMENT LENGTH DOES NOT INCLUDE STUCCO FINISH.
   B. FOR HOLLOW MASONRY, FILL ALL CELLS @ ANCHOR WITH 2500 PSI GROUT.
   C. ANCHORS SHALL BE INSTALLED IN ACCORDANCE WITH MANUFACTURER'S SPECIFICATIONS.
10. DOOR OPERATION TYPED TO BE PUSH-UP.
11. GUIDE TO JAMB ATTACHMENT FASTENERS BEGIN 4" FROM FLOOR AND END 3-1/2" BELOW TOP OF WALL OPENING.
12. TEST DOOR WALL OPENING SIZE: 6'-0" X 8'-0"

THESE CONFIDENTIAL DOCUMENTS SUBMITTED BY JANUS CONTAIN INFORMATION OF A PROPRIETARY NATURE AND MAY NOT BE REPRODUCED OR USED TO MANUFACTURE ANYTHING IN PART OR IN WHOLE FOR ANY PURPOSE OTHER THAN THAT WHICH IS NECESSARY FOR PREPARATION OF BIDS OF ENGINEERING WITHOUT THE EXPRESS PERMISSION OF JANUS WHICH MAY RECALL DOCUMENTS AT ANY TIME.

UNLESS OTHERWISE SPECIFIED DIMENSIONS ARE IN INCHES AND TOLERANCES ARE:

| DECIMAL | FRACTIONS | ANGLES | HOLE DIAMETERS |
|---|---|---|---|
| ±.003 | ± 1/16 | ± 0° 30' | UNDER 0.251 $^{+.004}_{-.003}$ |
| | | | 0.251 to 0.500 $^{+.006}_{-.003}$ |
| | | | OVER 0.500 $^{+.008}_{-.003}$ |

| | |
|---|---|
| PART NUMBER: | |
| MATERIAL: | |
| APPLIED FINISH: | |
| UNIT OF MEASURE: | |

| APPROVALS | DATE |
|---|---|
| DRAWN: BECKY NELSON | 11-14-02 |
| CHECKED: DON MILLS | 11-14-02 |
| APPROVED: DON MILLS | 11-14-02 |

**JANUS INTERNATIONAL CORPORATION**
135 JANUS INTERNATIONAL BLVD. TEMPLE, GA 30179-4435
770-562-2850/Fax 770-562-2264
© 2013 Janus International Corporation All Rights Reserved

CERTIFIED WIND LOAD RATED
26 GA SERIES 750 DOOR ASSEMBLY
MAX. SIZE: 6'-0" X 12'-0"

| SIZE | DRAWING NUMBER: | REV: |
|---|---|---|
| B | T1001 | C |
| SCALE: NONE | SHEET: 2 OF: 2 | |

STATE OF TEXAS
JOSEPH H. DIXON, JR.
18627
LICENSED
PROFESSIONAL ENGINEER
12/11/13