NOTES:

1. NON-IMPACT RESISTANT GLAZING OPTION – .090" MINIMUM SSB GLAZING IN MOLDED FRAMES GLUED WITH A 1/8" BEAD OF BOSTIK 1100 OR EQUIVALENT UNDER THE OUTER FRAME AND SCREWED TOGETHER WITH A MINIMUM OF (6) #8x1" SCREWS INSTALLED IN TOP OR INTERMEDIATE SECTION (WITH OR WITHOUT DECORATIVE INSERTS) MEETS UNIFORM STATIC DESIGN PRESSURES SHOWN ON THIS DRAWING. GLAZING SHALL HAVE A MAXIMUM HEIGHT OF 13.75" AND A MAXIMUM LENGTH OF 16.75". GLAZING IS NOT IMPACT RESISTANT AND DOES NOT MEET THE REQUIREMENTS FOR WIND-BORNE DEBRIS REGIONS. GLAZED SECTION REQUIRES 18 GA J-STRUT SCREWED TO LOWER INTEGRAL RIB OF SECTION AND OPERATOR STILE TO BE FACTORY INSTALLED. INSTALLER SHALL FIELD INSTALL (1) 1/4-14x7/8" SELF DRILLING CRIMPTITE SCREW TO ATTACH THE J-STRUT TO THE INTEGRAL RIB AND OPERATOR STILE AT THE CENTERLINE OF THE DOOR PER DETAIL F ON SHEET 2.

2. IMPACT RESISTANT GLAZING OPTION – IMPACT RESISTANT GLAZING SYSTEM MAY BE INSTALLED IN TOP OR INTERMEDIATE SECTION (WITH OR WITHOUT DECORATIVE INSERTS). GLAZING SHALL BE 1/4" MAKROLON-AR POLYCARBONATE OR EQUAL. GLAZING SHALL HAVE A MAXIMUM HEIGHT OF 15.21" AND A MAXIMUM LENGTH OF 50.08". GLAZING IS IMPACT RESISTANT AND DOES MEET THE REQUIREMENTS FOR WIND-BORNE DEBRIS REGIONS. SEE DETAIL H ON SHEET 2 FOR ASSEMBLY DETAILS. GLAZED SECTION REQUIRES REINFORCEMENT BRACKETS ATTACHED TO U-BAR ON UPPER INTEGRAL RIB (SEE DETAIL J SHEET 2), 18 GA J-STRUT SCREWED TO LOWER INTEGRAL RIB OF SECTION AND OPERATOR STILE TO BE FACTORY INSTALLED. INSTALLER SHALL FIELD INSTALL (1) 1/4-14x7/8" SELF DRILLING CRIMPTITE SCREW TO ATTACH THE J-STRUT TO THE INTEGRAL RIB AND OPERATOR STILE AT THE CENTERLINE OF THE DOOR. INSTALLER SHALL FIELD INSTALL (1) 1/4-14x7/8" SELF DRILLING CRIMPTITE SCREW TO ATTACH THE J-STRUT TO THE INTEGRAL RIB AND OPERATOR STILE AT THE CENTERLINE OF THE DOOR PER DETAIL F ON SHEET 2.

3. VINYL OR WOOD DOOR STOP NAILED A MAXIMUM OF 6" O.C. MUST OVERLAP TOP AND BOTH ENDS OF PANELS MINIMUM 7/16" TO MEET NEGATIVE PRESSURES.

4. KEY LOCK OR SLIDE LOCKS REQUIRED.

5. SECTION SHALL BE CONSTRUCTED WITH FOAMED IN PLACE POLYURETHANE FOAM INSULATION CHEMICALLY BONDED TO 30 GA MINIMUM FACER STEEL AND A POLYLAMINATE BACKER. END CAP TO HAVE A MINIMUM 1.1" DEPTH.

6. THE DESIGN OF THE SUPPORTING STRUCTURAL ELEMENTS SHALL BE THE RESPONSIBILITY OF THE PROFESSIONAL OF RECORD FOR THE BUILDING OR STRUCTURE AND IN ACCORDANCE WITH CURRENT BUILDING CODES FOR THE LOADS LISTED ON THIS DRAWING.

7. DOOR JAMB TO BE MINIMUM 2x6 STRUCTURAL GRADE LUMBER. REFER TO JAMB CONNECTION SUPPLEMENT FOR ATTACHMENT TO SUPPORTING STRUCTURE.

8. LOUVER OPTION – .040" MINIMUM LOUVERS IN MOLDED FRAMES SCREWED TOGETHER WITH A MINIMUM OF (6) #8x1" SCREWS INSTALLED IN THE BOTTOM SECTION. LOUVERS ARE NOT IMPACT RESISTANT AND DO NOT MEET THE REQUIREMENTS FOR WIND-BORNE DEBRIS REGIONS. LOUVERED SECTION REQUIRES OPERATOR STILE TO BE FACTORY INSTALLED AT THE CENTERLINE OF THE DOOR.

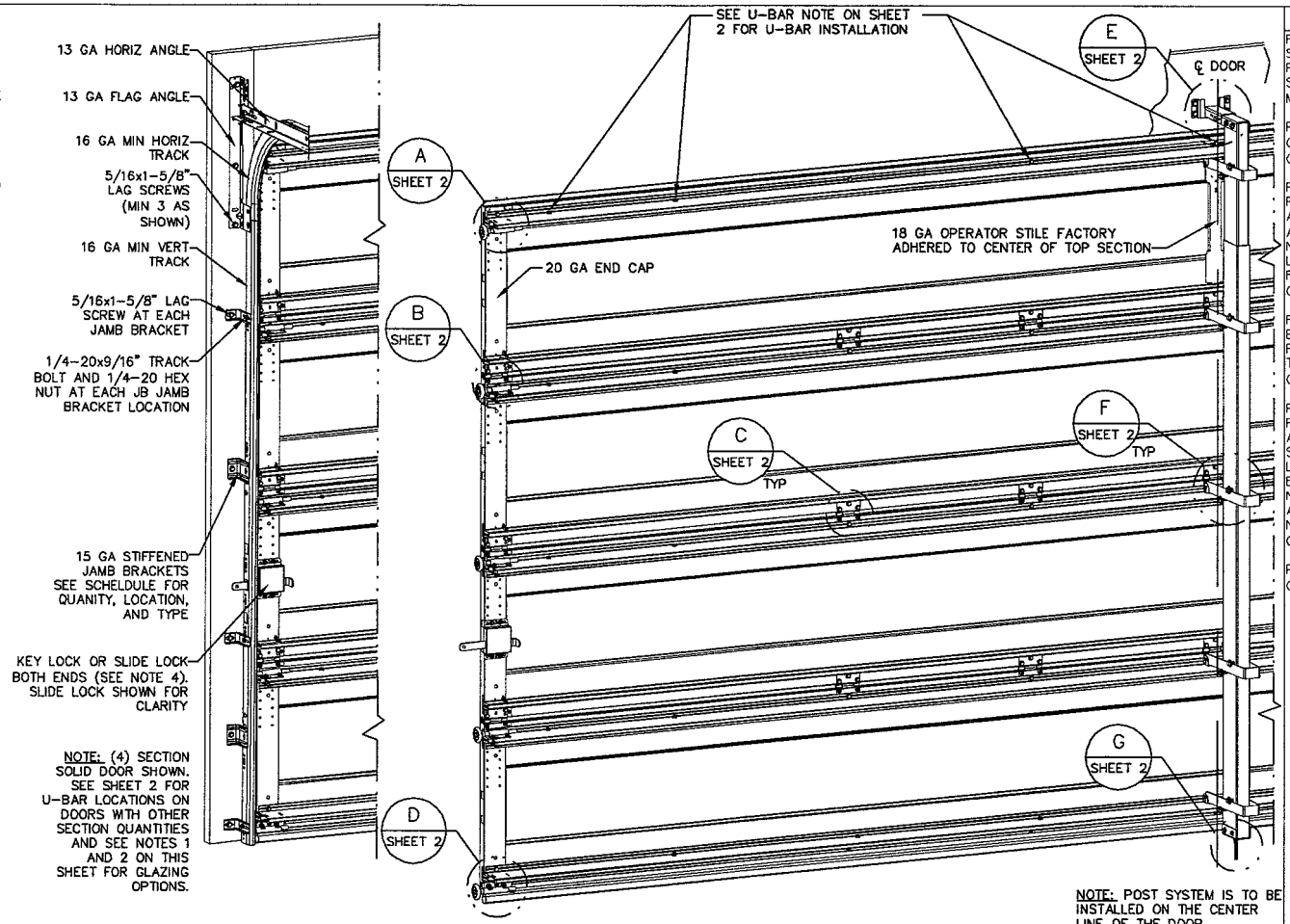

REVISIONS

P1 REVISED SUPERIMPOSED DESIGN PRESSURE LOADS ON SUPPORTING STRUCTURE MRB 5/10/06

P2 ADDED SHORT PANEL GLAZING OPTION (NOTE 1) GRT 6/30/06

P3 ADDED IMPACT RESISTANCE TO DOOR. ADDED JB JAMB BRACKET AT 2" LOCATION. MODIFIED NOTE 9 TO STATE THAT LOUVERS ARE NOT IMPACT RESISTANT. GRT 6/6/07

P4 MODIFED JAMB BRACKET SCHEDULE FOR FAT OPTION. ADDED LHR TRACK DETAIL SHEET 2. GRT 4/17/08

P5 ADDED IMPACT RESISTANT GLAZING. ADDED CONCRETE DETAIL SHEET 2. ADDED TEXAS LICENSE NUMBER TO TITLE BLOCK. CHANGED LOUVER NOTE. ADDED HIGH LIFT AND ROOF PITCH TRACK NOTE. GRT 7/22/08

P6 UPDATED TITLE BLOCK GRT 8/26/10

JAMB BRACKET SCHEDULE

DOOR HEIGHT	NO. OF SECTIONS	NO. OF JAMB BRACKETS (EACH JAMB)	TRACK TYPE	LOCATION OF CENTERLINE OF JAMB BRACKETS MEASURED FROM BOTTOM OF TRACK (ALL DIMENSIONS ± 2")
7'-0"	4	5	QI	2" (JB), 13" (QI), 25-1/2" (JB), 45-1/4" (QI), 63" (JB)
7'-0"	4	5	FAT	2" (JB), 10" (JB), 25-3/4" (JB), 42" (JB), 63-1/4" (JB)
8'-0"	5	6	QI	2" (JB), 13" (QI), 23" (JB), 34" (JB), 47-1/4" (QI), 67" (QI)
8'-0"	5	6	FAT	2" (JB), 10" (JB), 21-3/4" (JB), 29-3/4" (JB), 48" (JB), 66" (JB)
> 8'-0"/HIGH LIFT/ROOF PITCH				SEE NOTE BELOW

NOTE:
(JB) FOLLOWING DIMENSION DENOTES SLOTTED JAMB BRACKET ATTACHED TO TRACK WITH 1/4-20x9/16" TRACK BOLT AND NUT.

(QI) FOLLOWING DIMENSION DENOTES QUICK INSTALL JAMB BRACKET INSTALLED IN BUTTERFLY SLOT. NO ADDITIONAL HARDWARE NEEDED TO ATTACH TO TRACK.

ALL DOORS WITH HIGH LIFT AND/OR ROOF PITCH REQUIRE USE OF CONTINUOUS WALL ANGLE. SEE SUPPLEMENT TRACK CHART FOR DETAILS.

SUPERIMPOSED DESIGN PRESSURE LOADS ON SUPPORTING STRUCTURE

MAX DOOR WIDTH	MAX DOOR HEIGHT	UNIFORM LOAD EACH JAMB (PLF)	POINT LOAD AT HEADER AND SLAB AT EACH POST LOCATION (LBS)
18'-0"	7'-0"	+126.1/-167.3	+1237.5/-1381.9
	8'-0"	+126.1/-167.3	+1406.3/-1570.3

STATE OF TEXAS
JOHN E. SCATES
9/2/10

JOHN E. SCATES, PE
3121 FAIRGATE DR.
CARROLLTON, TX 75007
FL PE 51737 TX PE 56308/F2203

PROFESSIONAL ENGINEER'S SEAL PROVIDED ONLY FOR VERIFICATION OF WINDLOAD CONSTRUCTION DETAILS.

Wayne® Dalton
A DIVISION OF OVERHEAD DOOR CORP
3395 ADDISON DRIVE
PENSACOLA, FLORIDA 32514
(850) 474-9890

STATIC PRESSURE RATINGS		APPROVED SIZES		SCALE: N.T.S.		SIZE: A
DESIGN (PSF):	+30.00/-33.50	MAX WIDTH:	18'-0"		DATE	NAME
TEST (PSF):	+45.00/-50.25	MAX HEIGHT:	8'-0"	DRAWN	3/3/06	GRT
IMPACT/CYCLIC RATED (YES/NO):	YES	MAX SECTION HEIGHT:	21"	CHECKED	4/6/06	MRB

MODELS 5120/9100

WINDLOAD SPECIFICATION OPTION CODE 0236

SHEET 1 OF 2

DRAWING PART NO. 319024

REV. P6

13 GA ADJUSTABLE TOP FIXTURE ATTACHED TO PRE-PUNCHED HOLES IN BOTTOM OF U-BAR WITH (2) 1/4-14x5/8" CRIMPTITE SCREWS

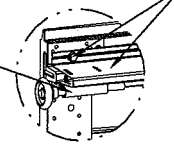

DETAIL A

PLACE U-BAR OVER INTEGRAL RIB WITH THE (8) PRE-PUNCHED HOLES EACH END FACING UPWARD AND ATTACH THRU END CAP AT EACH END WITH (2) 1/4-14x7/8" SELF DRILLING CRIMPTITE SCREWS FOR STANDARD TRACK AND (3) 1/4-14x7/8" SELF DRILLING CRIMPTITE SCREWS FOR LOW HEADROOM TRACK (2 OF WHICH ARE USED TO ATTACHED THE TOP BRACKET AS SHOWN).

13 GA ADJUSTABLE TOP FIXTURE

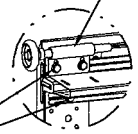

LOW HEADROOM TRACK

DETAIL A

13 GA ROLLER SLIDE ATTACHED TO PRE-PUNCHED HOLES IN TOP OF U-BAR WITH (2) 1/4-14x5/8" CRIMPTITE SCREWS. USE VIEWING HOLE IN SLIDE TO ENSURE PROPER ALIGNMENT OF ROLLERS

15 GA HINGE ATTACHED WITH (4) 1/4-14x5/8" CRIMPTITE SCREWS (2 OF WHICH ARE FACTORY ATTACHED)

2" NYLON STORMGARD ROLLER WITH 4-1/2" STEM

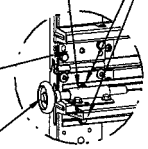

DETAIL B

PLACE U-BAR OVER INTEGRAL RIB WITH THE (8) PRE-PUNCHED HOLES EACH END FACING UPWARD AND ATTACH THRU END CAP AT EACH END WITH (2) 1/4-14x7/8" SELF DRILLING CRIMPTITE SCREWS
EXCEPTION: U-BAR PLACED OVER TOP RIB ON THE BOTTOM SECTION SHALL ONLY BE ATTACHED THRU END CAP AT EACH END WITH (1) 1/4-14x7/8" SELF DRILLING CRIMPTITE SCREW LOCATED ON THE BOTTOM FLANGE OF THE U-BAR
NOTE: DUE TO CLEARANCES REQUIRED TO INSTALL SCREWS AT THE ENDS OF THE U-BARS, ALL U-BARS SHALL BE INSTALLED ON SECTIONS PRIOR TO INSTALLING ROLLER SLIDES AND TOP FIXTURE ON THE U-BARS. SEE ATTACHMENT NOTES ON THIS SHEET.

USED ONLY ON IMPACT GLAZED SECTION - 11 GA REINFORCEMENT BRACKET ATTACHED WITH (4) 1/4-14x7/8" SELF DRILLING CRIMPTITE SCREWS (2 THROUGH BOTH BRACKET AND U-BAR)

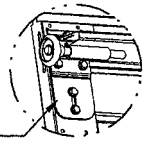

DETAIL J

18 GA HINGE ATTACHED WITH (5) 1/4-20x5/8" CRIMPTITE SCREWS AND (1) 1/4-14x7/8" SELF DRILLING CRIMPTITE SCREW (2 OF WHICH ARE FACTORY ATTACHED, 3 OF WHICH ARE FIELD INSTALLED INTO TOP LEAF, AND 1 OF WHICH IS FIELD INSTALLED THRU PRE-PUNCHED HOLE IN U-BAR)

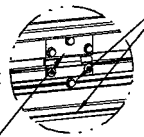

DETAIL C

PLACE U-BAR OVER INTEGRAL RIB AND ATTACH WITH (2) 1/4-20x5/8" CRIMPTITE SCREWS THRU PRE-PUNCHED HOLES AT EACH INTERMEDIATE HINGE LOCATION (1 THRU FLANGE OF U-BAR AND BOTTOM HINGE LEAF AND 1 THRU WEB OF U-BAR AND INTEGRAL RIB OF SECTION)
EXCEPTION: AT ALL LOCATIONS REQUIRING A STRAP BRACKET, (1) 1/4-14x7/8" SELF DRILLING CRIMPTITE SCREW WILL BE USED.

(1) 1/4-14x7/8" SELF DRILLING CRIMPTITE SCREW AT CENTER LINE OF DOOR THRU J-STRUT & OPERATOR BRACKET.
NOTE: J-STRUT & SCREW ONLY REQUIRED ON GLAZED SECTIONS. SEE NOTES 1 & 2 SHEET 1

(3) 1/4-14x7/8" SELF DRILLING CRIMPTITE SCREWS

STRAP BRACKET

5/16" HITCH PIN

(2) 5/16-12x1" SELF DRILLING SCREWS W/ 5/16 FLAT WASHERS

(1) 1/4-14x7/8" SELF DRILLING CRIMPTITE SCREW EACH SIDE OF STRAP BRACKET (ONLY REQUIRED ON IMPACT GLAZED DOOR)

LOCKING STRAP

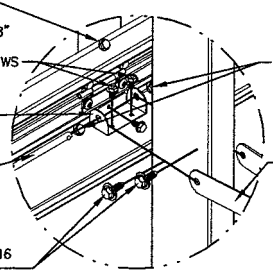

DETAIL F

12 GA BOTTOM BRACKET FACTORY ATTACHED WITH (3) 1/4-14x5/8" CRIMPTITE SCREWS

FOR IMPACT RESISTANCE, BOTTOM BRACKET MUST BE SCREWED TO THE BOTTOM U-BAR WITH (2) 1/4-14x7/8" SELF DRILLING CRIMPTITE SCREWS. SEE IMPACT BOTTOM BRACKET DETAIL THIS SHEET.

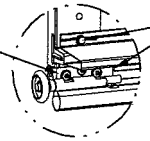

DETAIL D

PLACE U-BAR OVER INTEGRAL RIB WITH NOTCH DOWN TO CLEAR BOTTOM BRACKET AND ATTACH THRU END CAP AT EACH END WITH (1) 1/4-14x7/8" SELF DRILLING CRIMPTITE SCREW AS SHOWN AND USE (1) 1/4-14x7/8" SELF DRILLING CRIMPTITE SCREW ACROSS THE BOTTOM OF THE BOTTOM U-BAR AT EACH PRE-PUNCHED HOLE AT EVERY HINGE LOCATION. USE (1) 1/4-20x5/8" CRIMPTITE SCREW AT ALL OTHER PRE-PUNCHED HOLE LOCATIONS.

ALUMINUM POST

1/2-13x3-1/2" HEX BOLT & NUT

(4) 5/16-12x1" SELF DRILLING SCREWS

BOTTOM LOCK PLATE

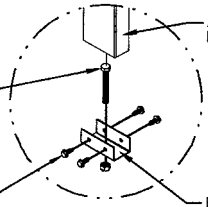

DETAIL G

#8x3/4" MIN STAINLESS SCREWS WITH STAINLESS BACKED RUBBER WASHERS 3-1/2" O.C. MAX

1/8" BEAD GE ULTRAGLAZE SSG4000AC STRUCTURAL SEALANT OR EQUIVALENT

FACER STEEL

NON-STRUCTURAL DECORATIVE INNER WINDOW TRIM

NON-STRUCTURAL DECORATIVE OUTER WINDOW TRIM

1/4" POLYCARBONATE

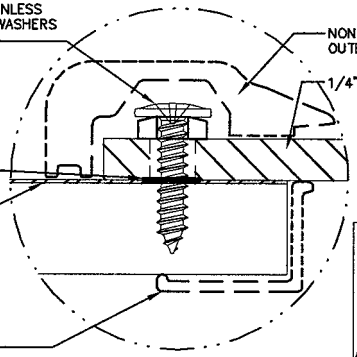

DETAIL H

HEADER

HEADER LOCK BRACKET

(4) 5/16x1-5/8" LAG SCREWS

5/16-18x2-1/2" HEX BOLT & NUT

TOP PLATE EXTENSION

TOP LOCK PLATE

(4) 5/16-12x1" SELF DRILLING SCREWS

INNER POST

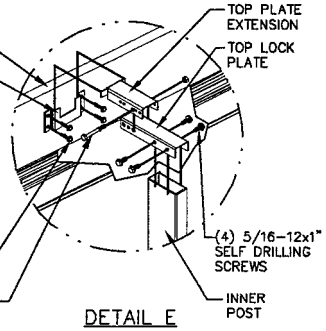

DETAIL E

ATTACH BOTTOM BRACKET TO BOTTOM U-BAR WITH (2) 1/4-14x7/8" SELF DRILLING CRIMPTITE SCREWS

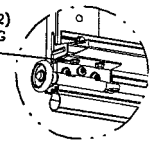

IMPACT BOTTOM BRACKET

2500 PSI MIN CONCRETE

8" X 8" MIN TURNDOWN SLAB AT EDGE

6" MIN EDGE DISTANCE

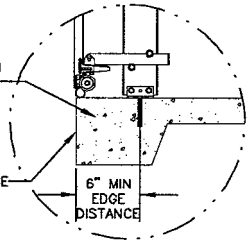

CONCRETE DETAIL

(5) SECTION DOORS WITH (6) 3", 20 GA, 80 KSI U-BARS LOCATED OVER INTEGRAL RIBS AS SHOWN

(4) SECTION DOORS WITH (5) 3", 20 GA, 80 KSI U-BARS LOCATED OVER INTEGRAL RIBS AS SHOWN

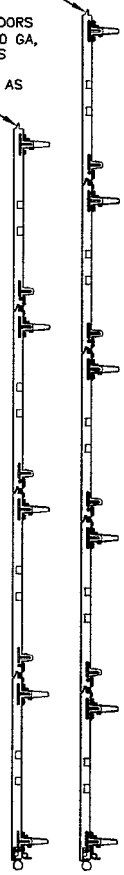

U-BAR ATTACHMENT NOTES

1. ALL U-BARS SHALL BE PLACED OVER INTEGRAL RIBS AND ATTACHED THRU PRE-PUNCHED HOLES WITH (2) 1/4-14x5/8" CRIMPTITE SCREWS AT EACH INTERMEDIATE HINGE LOCATION, (2) 1/4-14x7/8" SELF DRILLING CRIMPTITE SCREWS AT EACH END CAP (EXCEPT BOTH U-BARS ON BOTTOM SECTION - SEE DETAIL B AND D THIS SHEET), (2) 1/4-14x5/8" CRIMPTITE SCREWS APPROXIMATELY MIDWAY BETWEEN END OF DOOR AND INTERMEDIATE HINGE LOCATION, AND (1) 1/4-14x5/8" CRIMPTITE SCREW APPROXIMATELY 8" FROM EACH END. THERE SHALL BE A TOTAL OF (20) SCREWS ATTACHING EACH U-BAR EXCEPT BOTH U-BARS ON BOTTOM SECTION SHALL HAVE A TOTAL OF (18) SCREWS EACH.

2. WITH THE EXCEPTION OF THE (8) PRE-PUNCHED HOLES IN THE TOP OF EACH END USED FOR ATTACHMENT OF THE ROLLER SLIDES AND THE (6) PRE-PUNCHED HOLES IN THE BOTTOM OF EACH END USED FOR THE ATTACHMENT OF THE TOP FIXTURE AND UNLESS NOTED OTHERWISE ON THIS SPECIFICATION DRAWING, ALL PRE-PUNCHED HOLES IN ALL U-BARS SHALL BE ATTACHED TO THE DOOR WITH 1/4-14x5/8" CRIMPTITE SCREWS.

3. 20 GA U-BARS SHALL BE STAMPED "34" APPROXIMATELY 8" FROM EACH END.

REVISIONS

P1 REVISED SUPERIMPOSED DESIGN PRESSURE LOADS ON SUPPORTING STRUCTURE MRB 5/10/06

P2 ADDED SHORT PANEL GLAZING OPTION (NOTE 1) GRT 6/30/06

P3 ADDED IMPACT RESISTANCE TO DOOR. ADDED JB JAMB BRACKET AT 2" LOCATION. MODIFIED NOTE 9 TO STATE THAT LOUVERS ARE NOT IMPACT RESISTANT. GRT 6/6/07

P4 MODIFED JAMB BRACKET SCHEDULE FOR FAT OPTION. ADDED LHR TRACK DETAIL SHEET 2. GRT 4/17/08

P5 ADDED IMPACT RESISTANT GLAZING. ADDED CONCRETE DETAIL SHEET 2. ADDED TEXAS LICENSE NUMBER TO TITLE BLOCK. CHANGED LOUVER NOTE. ADDED HIGH LIFT AND ROOF PITCH TRACK NOTE. GRT 7/22/08

P6 UPDATED TITLE BLOCK GRT 8/26/10

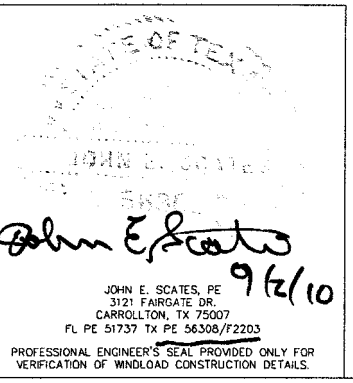

9/2/10

JOHN E. SCATES, PE
3121 FAIRGATE DR.
CARROLLTON, TX 75007
FL PE 51737 TX PE 56308/F2203

PROFESSIONAL ENGINEER'S SEAL PROVIDED ONLY FOR VERIFICATION OF WINDLOAD CONSTRUCTION DETAILS.

Wayne® Dalton

A DIVISION OF OVERHEAD DOOR CORP
3395 ADDISON DRIVE
PENSACOLA, FLORIDA 32514
(850) 474-9890

STATIC PRESSURE RATINGS		APPROVED SIZES		SCALE: N.T.S.		SIZE: A
DESIGN (PSF):	+30.00/-33.50	MAX WIDTH:	18'-0"		DATE	NAME
TEST (PSF):	+45.00/-50.25	MAX HEIGHT:	8'-0"	DRAWN	3/3/06	GRT
IMPACT/CYCLIC RATED (YES/NO):	YES	MAX SECTION HEIGHT:	21"	CHECKED	4/6/06	MRB

MODELS 5120/9100

SHEET 2 OF 2

WINDLOAD SPECIFICATION OPTION CODE 0236

DRAWING PART NO. 319024

REV. P6