| L'TR | REVISION | DATE | BY | E.C.O. |
|---|---|---|---|---|
| * | ORIGINAL ISSUE | 11/19/14 | TJE | 1616 |
| A | REVISED AVAILABLE CONFIGURATIONS | 03/15/16 | TJE | 1616 |
| B | REVISED MAXIMUM HEIGHT NOTE | 08/10/16 | TJE | 1616 |

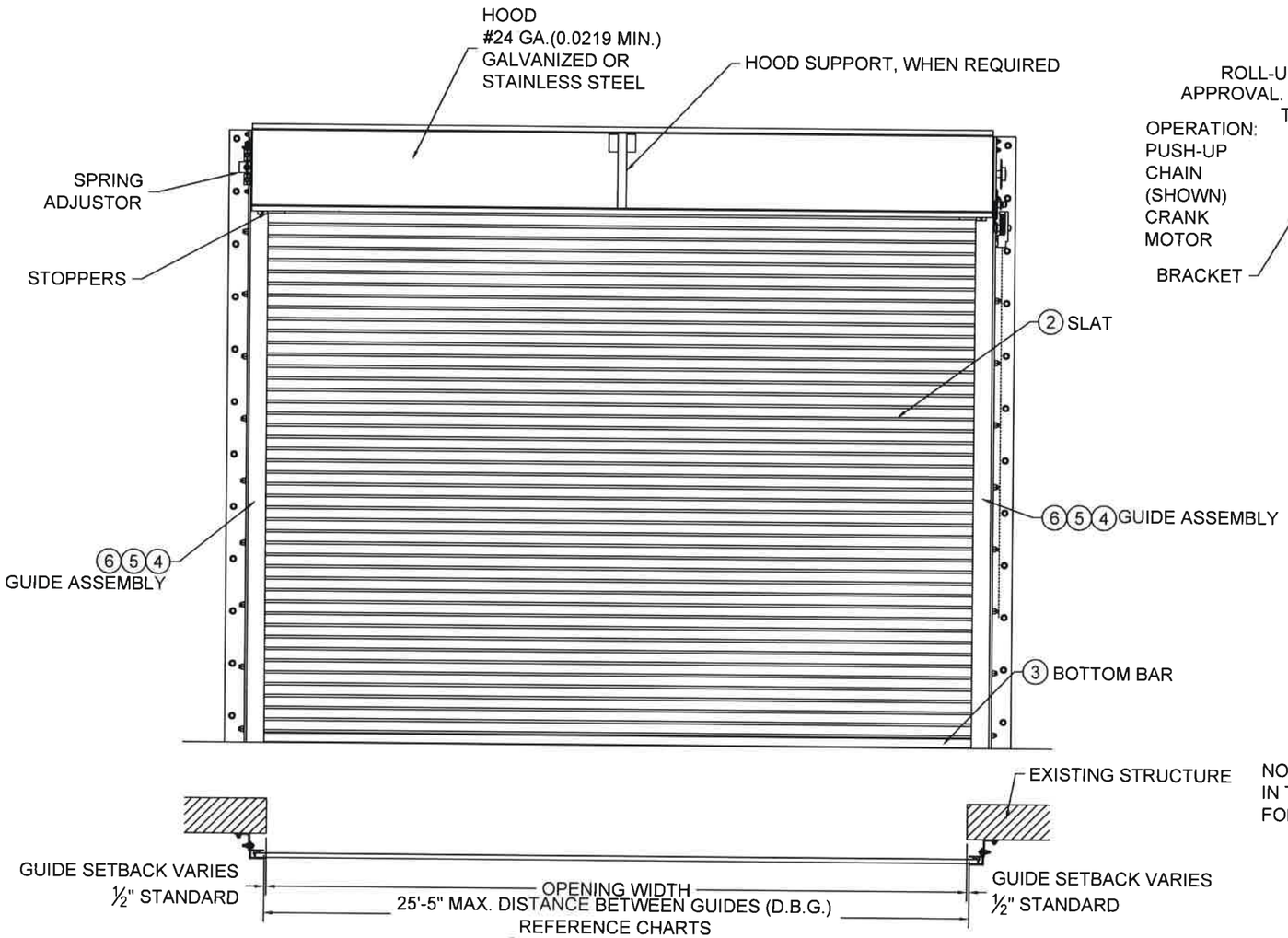


1 OVERALL DOOR ASSEMBLY
1:32 SCALE

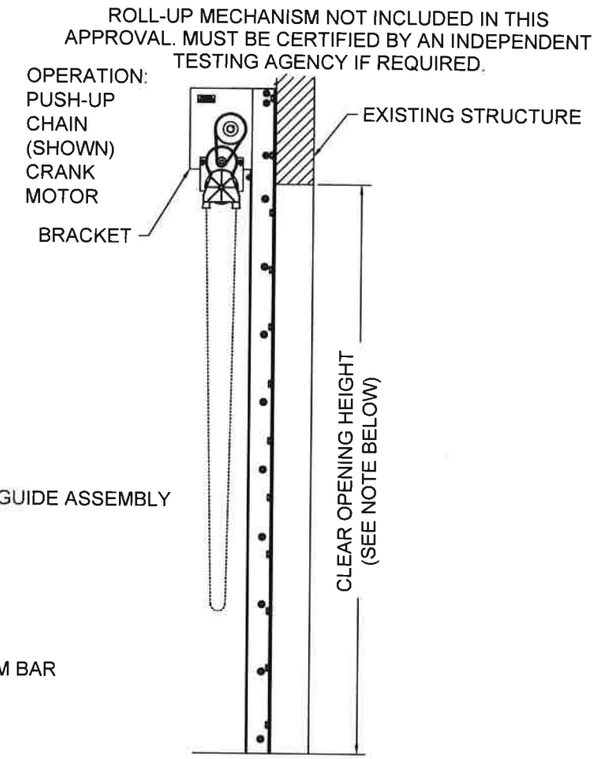


NOTE: WIND LOADS SPECIFIED IN TABLES ARE ACCEPTABLE FOR ANY C.O.H. UP TO 30'-0"

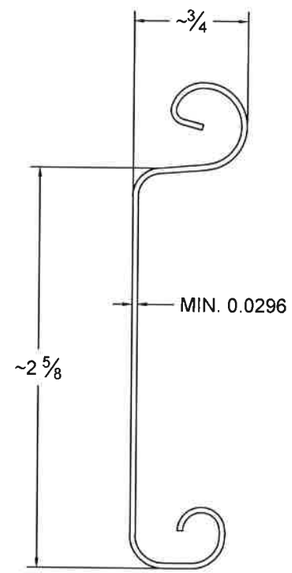


2 SLAT DETAIL
TYPICAL SECTION
ASTM A653 HSLAS TYPE B GRADE 40 G40 OR
ASTM A653 HSLAS TYPE A GRADE 40 G40 OR
ASTM A653 STRUCTURAL STEEL GRADE 40 G40
OR TYPE 304 STAINLESS STEEL (MIN. YIELD 40,000 psi)
OR TYPE 316 STAINLESS STEEL (MIN. YIELD 40,000 psi)
OR TYPE 430 STAINLESS STEEL (MIN. YIELD 40,000 psi)
OR TYPE 201 STAINLESS STEEL (MIN. YIELD 40,000 psi)
FULL SCALE

STATE OF TEXAS
SHAWN PATRICK KELLEY
104034
LICENSED
PROFESSIONAL ENGINEER
AUG 15 2016


CORNELL Innovative door solutions.
24 ELMWOOD AVE 1901 S. LITCHFIELD RD
MOUNTAINTOP, PA GOODYEAR, AZ
800 TULIP DRIVE
GASTONIA, NC
P: 800.233.8366
F: 800.526.0841
E: ADS@CORNELLIRON.COM


Unless otherwise specified, dimensions are in inches & tolerances are:
0.000 = +/- 0.031
FRACTIONAL = +/- 1/32
ANGLES = +/- 1/2 DEG

TITLE: WIND LOAD CONFIGURATION
NON-INSULATED ROLLING STEEL DOOR
CP0020 SLAT IMPACT RATED

| DRAWN BY: | SIZE: | SCALE: | SHEET: |
|---|---|---|---|
| TJE | B | AS NOTED | 1/8 |

DWG NO: ES-16-67-CIW

| L'TR | REVISION | DATE | BY | E.C.O. |
|---|---|---|---|---|
| * | ORIGINAL ISSUE | 11/19/14 | TJE | 1616 |
| A | REVISED AVAILABLE CONFIGURATIONS | 03/15/16 | TJE | 1616 |
| B | REVISED MAXIMUM HEIGHT NOTE | 08/10/16 | TJE | 1616 |

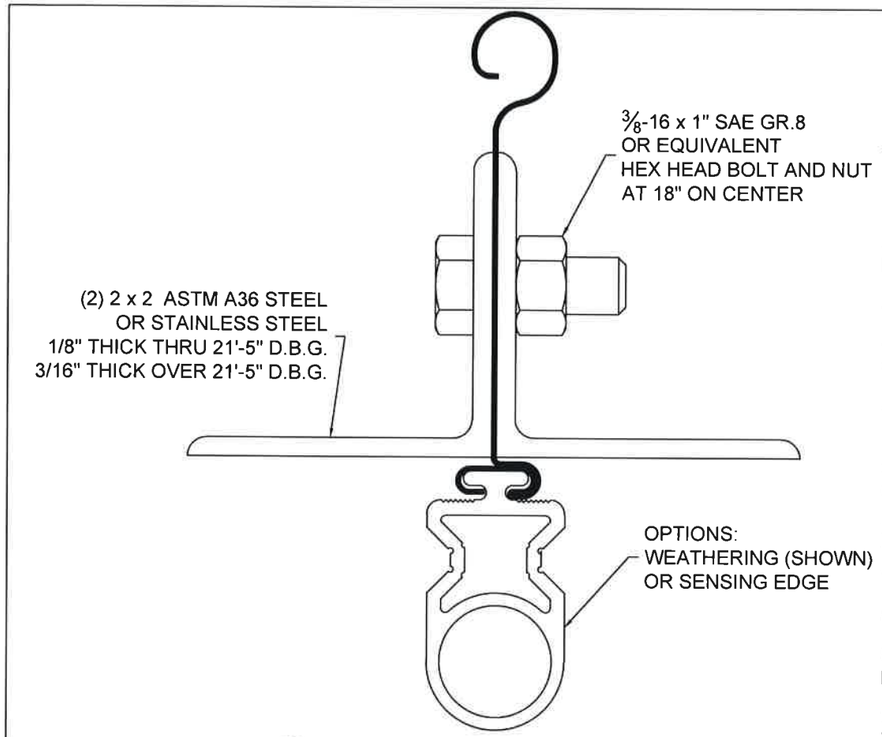


③ DOUBLE ANGLE BOTTOM BAR DETAIL
TYPICAL SECTION
FULL SCALE

**GENERAL NOTES:**

***1.*** THESE PRODUCT EVALUATION DOCUMENTS REPRESENT A ROLL-UP DOOR ASSEMBLY DESIGNED AND TESTED IN ACCORDANCE WITH THE STANDARD BUILDING CODE, THE INTERNATIONAL BUILDING CODE, AND THE FLORIDA BUILDING CODE.

***2.*** THIS ROLL-UP DOOR HAS BEEN TESTED FOR UNIFORM STATIC PRESSURE, IMPACT AND FATIGUE RESISTANCE IN ACCORDANCE WITH THE FBC TEST PROTOCOLS FOR HIGH VELOCITY HURRICANE ZONES TAS 201, TAS 202, AND TAS 203.

***3.*** A 33% INCREASE IN ALLOWABLE STRESS HAS NOT BEEN USED IN THE DESIGN OF THIS PRODUCT.

***4.*** DETERMINE THE POSITIVE AND NEGATIVE DESIGN LOADS TO USE WHEN REFERENCING THESE DOCUMENTS IN ACCORDANCE WITH THE GOVERNING CODE AND GOVERNING WIND VELOCITY.

***5.*** THESE PRODUCT EVALUATION DOCUMENTS ARE PREPARED BY THE PRODUCT ENGINEER AND ARE GENERIC. THEY DO NOT INCLUDE INFORMATION PREPARED FOR A SPECIFIC SITE.

***6.*** THESE PRODUCT EVALUATION DOCUMENTS ARE NOT VALID FOR PERMIT WITHOUT ORIGINAL SIGNATURE, DATE AND EMBOSSED SEAL ON EACH PERMIT COPY, WHETHER OR NOT A MASTER APPROVAL DOCUMENT IS ON FILE WITH A MUNICIPALITY OR OTHER GOVERNING AGENCY.

***7.*** THESE PRODUCT EVALUATION DOCUMENTS ARE SUITABLE TO BE APPLIED BY THE CONTRACTOR PROVIDED THE CONTRACTOR DOES NOT DEVIATE FROM THE CONDITIONS DETAILED HEREIN AND THE CONTRACTOR VERIFIES THE EXISTING STRUCTURE IS CAPABLE OF SUPPORTING THE SUPERIMPOSED LOADS Vx & Vy ON THE JAMBS OF THE DOOR.

***8.*** ALTERATIONS OR ADDITIONS TO THIS DOCUMENT ARE NOT PERMITTED.

***9.*** WHEN THE SITE CONDITIONS DEVIATE FROM THESE PRODUCT EVALUATION DOCUMENTS, SITE SPECIFIC DOCUMENTS SHALL BE PREPARED BY A DULY LICENSED AND REGISTERED ENGINEER OR ARCHITECT.

***10.*** IF THE DEVIATING SITE SPECIFIC DOCUMENTS ARE PREPARED BY A DELEGATED REGISTERED ENGINEER OR ARCHITECT, SAID DOCUMENTS SHALL BEAR THE DATE, SIGNATURE, AND EMBOSSED SEAL OF THE DELEGATED ENGINEER OR ARCHITECT AND SHALL BE SUBMITTED TO THE PROJECT ENGINEER FOR REVIEW.

***11.*** ALL HARDWARE SHALL BE GALVANIZED STEEL, PLATED STEEL OR STAINLESS STEEL

***12.*** ALL WINDLOCK RIVETS SHALL BE 1/4" STEEL RIVETS IFI GRADE 30 WITH A MINIMUM TENSILE STRENGTH OF 1,850 Lbs., AND SHEAR STRENGTH OF 2,400 Lbs., U.O.N.. RIVETS TO BE INSTALLED IN ALL WINDLOCK HOLES.

***13.*** ENDLOCKS/WINDLOCKS SHALL BE CAST MALLEABLE IRON TYPE 32510 PER ASTM A47 OR CAST DUCTILE IRON PER ASTM A536 GRADE 65-45-12.

***14.*** ALL WELDING SHALL BE PERFORMED BY QUALIFIED WELDERS IN ACCORDANCE WITH A.W.S. SPECIFICATIONS, LATEST EDITION. ALL WELDING ELECTRODES SHALL CONFORM TO A.W.S. A5.1 GRADE E-70. MINIMUM WELDING PROCESSES SHALL BE ARC WELDING A.W.S. E7014 OR MIG WELDING A.W.S. ER70S-6.

***15.*** ANCHOR NOTES:
A. EMBEDMENT LENGTH DOES NOT INCLUDE STUCCO FINISH.
B. ANCHORS SHALL BE INSTALLED IN ACCORDANCE WITH MANUFACTURERS SPECIFICATIONS.
C. ANCHOR CAPACITY FOR THIS ROLL-UP DOOR IS BASED ON MIN. 3,000 P.S.I. CONCRETE EXCEPT WHERE NOTED..
D. FOR MINIMUM EMBEDMENT AND MINIMUM EDGE DISTANCE, REFER TO TABLES.

***16.*** DOOR MAY BE INSTALLED ON THE INSIDE OR OUTSIDE OF AN EXTERIOR WALL

***17***. ALL SHAPES USED FOR GUIDE ASSEMBLIES MUST CONFORM TO ATSM A36 FOR STEEL OR ASTM A276 FOR TYPES 304 OR 316 WITH A MINIMUM 36 KSI YIELD STRENGTH.

STATE OF TEXAS
SHAWN PATRICK KELLEY
104034
LICENSED
PROFESSIONAL ENGINEER
AUG 15 2016


CORNELL Innovative door solutions.
24 ELMWOOD AVE 1901 S. LITCHFIELD RD
MOUNTAINTOP, PA GOODYEAR, AZ
800 TULIP DRIVE
GASTONIA, NC
P: 800.233.8366
F: 800.526.0841
E: ADS@CORNELLIRON.COM


Unless otherwise specified, dimensions are in inches & tolerances are:
0.000 = +/- 0.031
FRACTIONAL = +/- 1/32
ANGLES = +/- 1/2 DEG

TITLE: WIND LOAD CONFIGURATION
NON-INSULATED ROLLING STEEL DOOR
CP0020 SLAT IMPACT RATED

| DRAWN BY: | SIZE: | SCALE: | SHEET: |
|---|---|---|---|
| TJE | B | AS NOTED | 2/8 |

DWG NO: ES-16-67-CIW

| L'TR | REVISION | DATE | BY | E.C.O. |
|---|---|---|---|---|
| * | ORIGINAL ISSUE | 11/19/14 | TJE | 1616 |
| A | REVISED AVAILABLE CONFIGURATIONS | 03/15/16 | TJE | 1616 |
| B | REVISED MAXIMUM HEIGHT NOTE | 08/10/16 | TJE | 1616 |

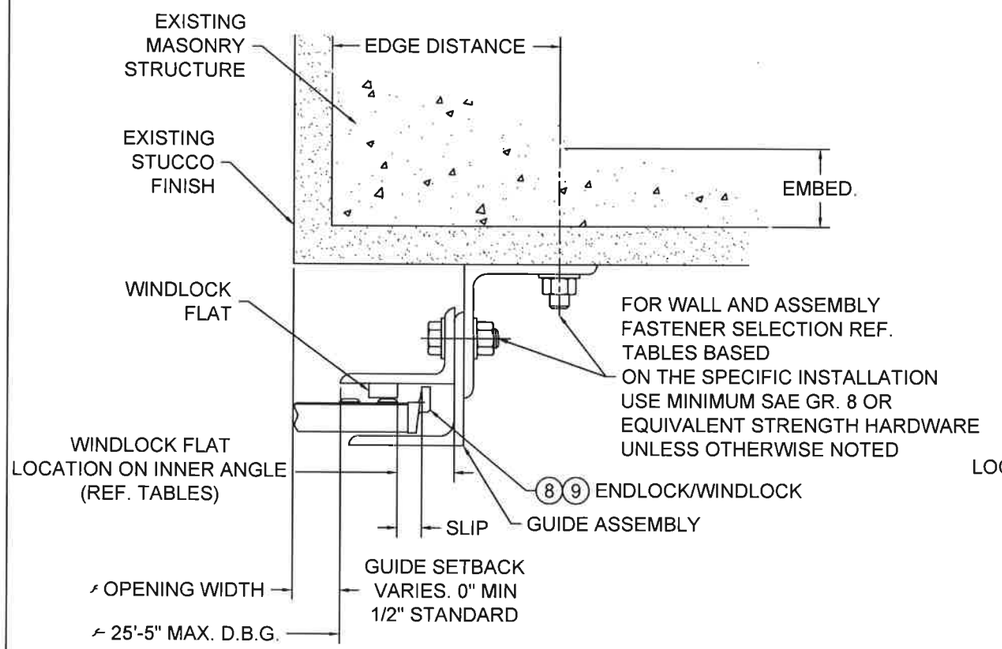


NOTE:
THROUGH BOLTING TO FILLED BLOCK REQUIRES THE USE OF 1/4" THICK STEEL OR STAINLESS STEEL CRUSH PLATE

5 GUIDE ASSEMBLY
CONCRETE OR FILLED BLOCK STRUCTURE
(Z-GUIDE)

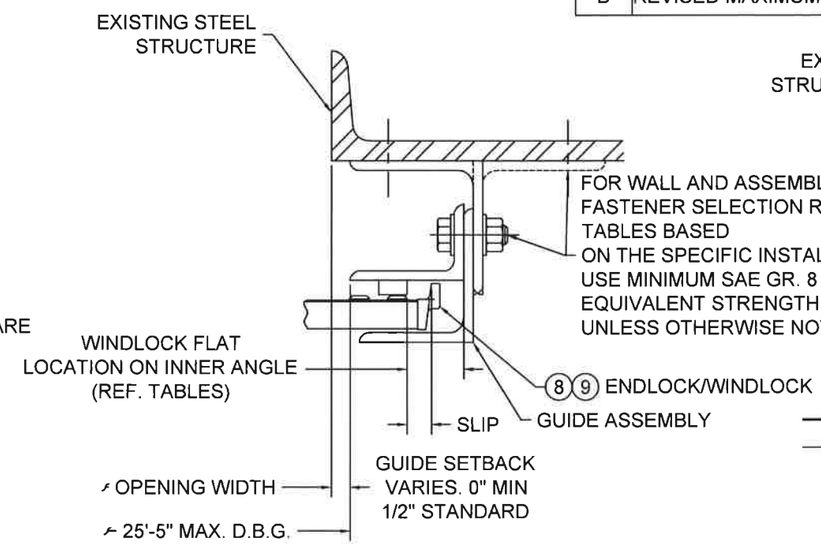


6 GUIDE ASSEMBLY
STEEL STRUCTURE
(Z-GUIDE OR E-GUIDE)

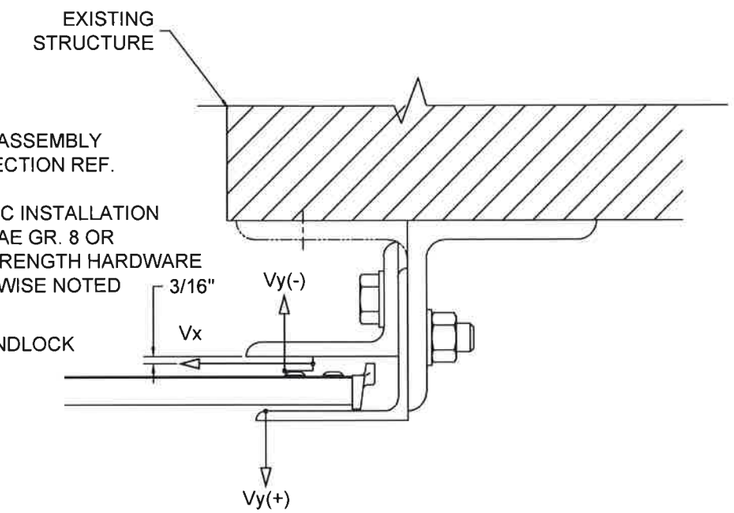


NOTE:

1. Vx & Vy ARE HORIZ. AND VERT. COMPONENTS OF THE REACTION, RESPECTIVELY, RESULTING FROM WIND LOADS ON THE ROLL-UP DOOR. THE EXISTING STRUCTURE SHALL BE CAPABLE OF RESISTING Vx & Vy FORCES SHOWN AND THE CORRESPONDING REACTIONS DUE TO THE ECCENTRICITIES OF THE FORCES.

7 SUPERIMPOSED LOAD DIAGRAM
SCALE: 3" = 1'-0"

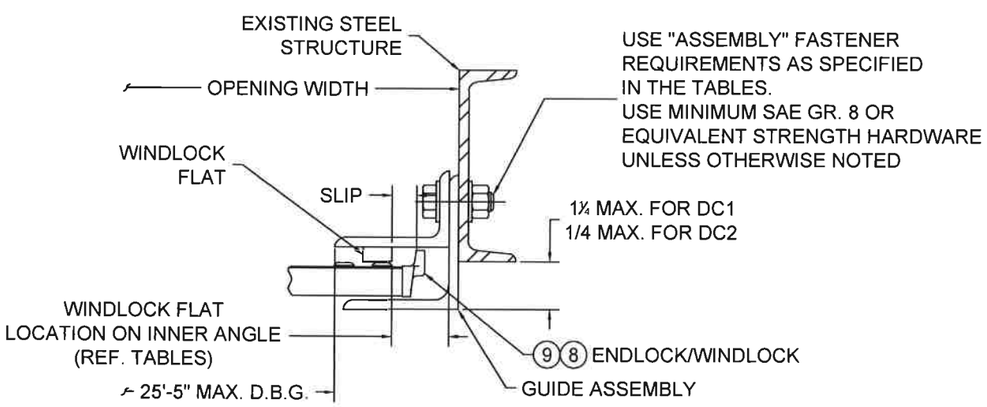


4 GUIDE ASSEMBLY
STEEL STRUCTURE
(BETWEEN JAMBS GUIDE)

STATE OF TEXAS
SHAWN PATRICK KELLEY
104034
LICENSED
PROFESSIONAL ENGINEER
AUG 15 2016


CORNELL Innovative door solutions.
24 ELMWOOD AVE 1901 S. LITCHFIELD RD
MOUNTAINTOP, PA GOODYEAR, AZ
800 TULIP DRIVE
GASTONIA, NC
P: 800.233.8366
F: 800.526.0841
E: ADS@CORNELLIRON.COM


Unless otherwise specified, dimensions are in inches & tolerances are:
0.000 = +/- 0.031
FRACTIONAL = +/- 1/32
ANGLES = +/- 1/2 DEG

TITLE: WIND LOAD CONFIGURATION NON-INSULATED ROLLING STEEL DOOR CP0020 SLAT IMPACT RATED

| DRAWN BY: | SIZE: | SCALE: | SHEET: |
|---|---|---|---|
| TJE | B | AS NOTED | 3/8 |

DWG NO: ES-16-67-CIW

| L'TR | REVISION | DATE | BY | E.C.O. |
|---|---|---|---|---|
| * | ORIGINAL ISSUE | 11/19/14 | TJE | 1616 |
| A | REVISED AVAILABLE CONFIGURATIONS | 03/15/16 | TJE | 1616 |
| B | REVISED MAXIMUM HEIGHT NOTE | 08/10/16 | TJE | 1616 |

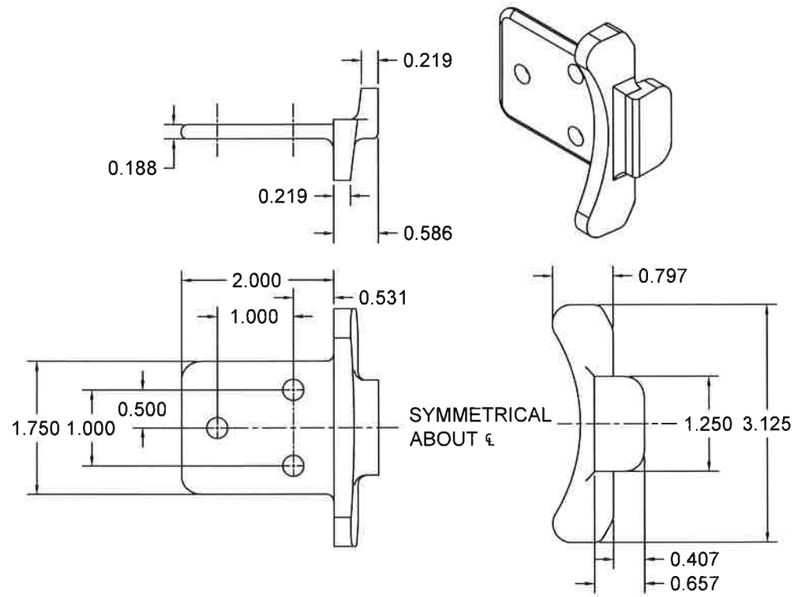


⑧ENDLOCK / WINDLOCK DETAIL, CP1152
CAST MALLEABLE IRON ASTM A47, GRADE 32510, OR
DUCTILE IRON PER ASTM A536 GRADE 65-45-12, GALVANIZED IN ACCORDANCE WITH
ASTM A123, GRADE 85 ZINC-COATING
1/2 SCALE

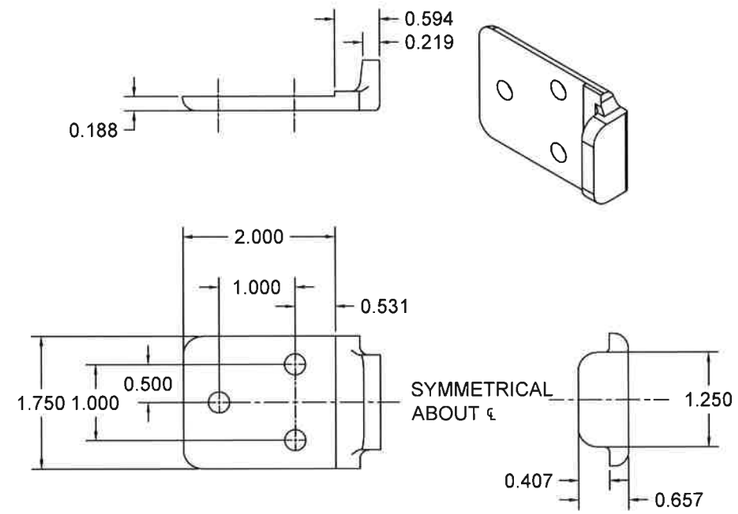


⑨ WINDLOCK DETAIL, CP1153
CAST MALLEABLE IRON ASTM A47, GRADE 32510, OR
DUCTILE IRON PER ASTM A536 GRADE 65-45-12, GALVANIZED IN
ACCORDANCE WITH ASTM A123, GRADE 85 ZINC-COATING
1/2 SCALE

STATE OF TEXAS
SHAWN PATRICK KELLEY
104034
LICENSED
PROFESSIONAL ENGINEER
AUG 15 2016

CORNELL
Innovative door solutions.™


24 ELMWOOD AVE 1901 S. LITCHFIELD RD
MOUNTAINTOP, PA GOODYEAR, AZ
800 TULIP DRIVE
GASTONIA, NC
P: 800.233.8366
F: 800.526.0841
E: ADS@CORNELLIRON.COM


Unless otherwise specified, dimensions are in inches & tolerances are:

0.000 = +/- 0.031
FRACTIONAL = +/- 1/32
ANGLES = +/- 1/2 DEG

TITLE: WIND LOAD CONFIGURATION
NON-INSULATED ROLLING STEEL DOOR
CP0020 SLAT IMPACT RATED

| DRAWN BY: | SIZE: | SCALE: | SHEET: |
|---|---|---|---|
| TJE | B | AS NOTED | 4/8 |

DWG NO: ES-16-67-CIW

| L'TR | REVISION | DATE | BY | E.C.O. |
|---|---|---|---|---|
| * | ORIGINAL ISSUE | 11/19/14 | TJE | 1616 |
| A | REVISED AVAILABLE CONFIGURATIONS | 03/15/16 | TJE | 1616 |
| B | REVISED MAXIMUM HEIGHT NOTE | 08/10/16 | TJE | 1616 |

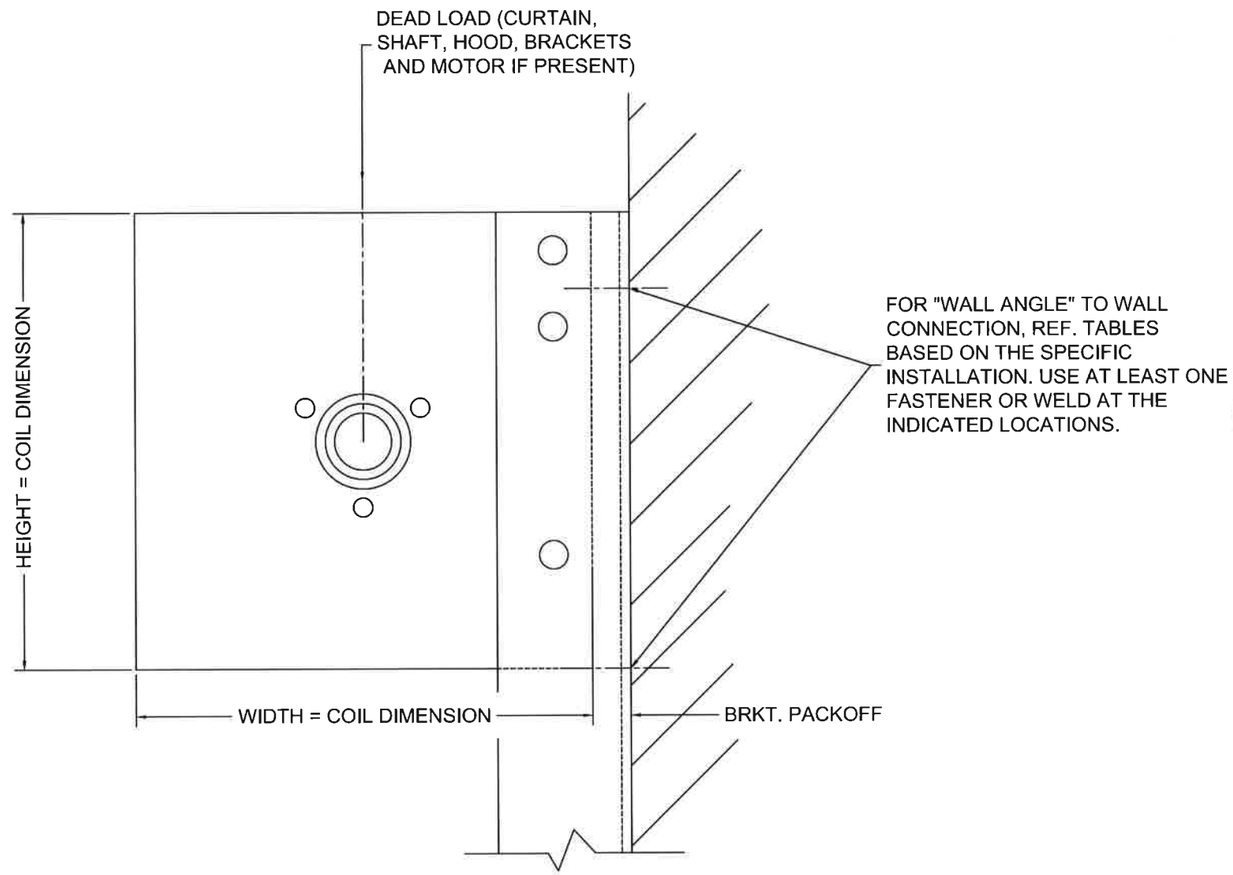


DOOR WEIGHT AND DIMENSIONS

NOTE:

1. WHEN MOTOR IS PROVIDED, HEIGHT OR WIDTH DIMENSION MAY INCREASE UP TO 2-1/2" BASED ON MOTOR LOCATION. WHEN AN 8" DIAMETER OR LARGER SHAFT ASSEMBLY IS PROVIDED, HEIGHT DIMENSION INCREASES BY 2".

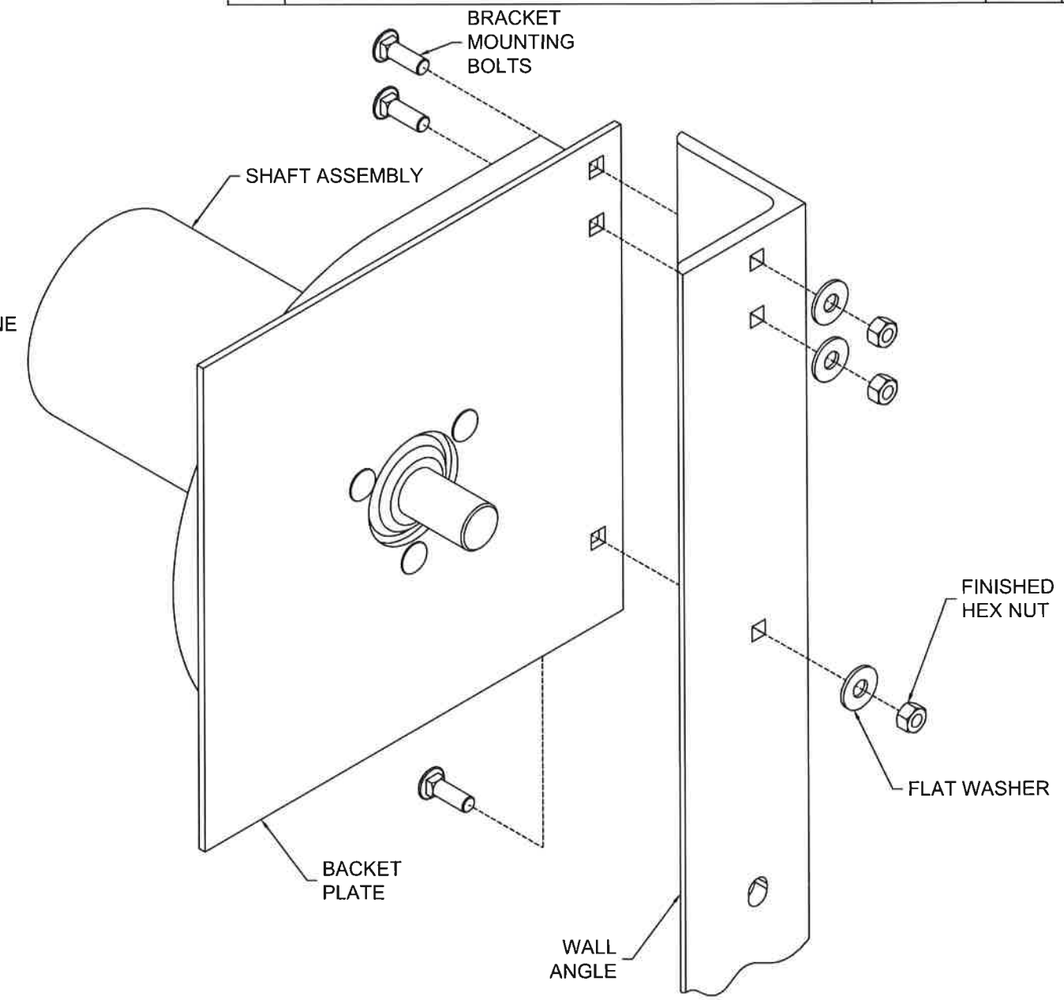


BRACKET MOUNTING

NOTE:

1. STANDARD BRACKET MOUNTING DETAIL IS DEPICTED, OTHER MOUNTINGS ARE AVAILABLE

STATE OF TEXAS
SHAWN PATRICK KELLEY
104034
LICENSED
PROFESSIONAL ENGINEER
AUG 15 2016

CORNELL Innovative door solutions™

24 ELMWOOD AVE 1901 S. LITCHFIELD RD
MOUNTAINTOP, PA GOODYEAR, AZ
800 TULIP DRIVE
GASTONIA, NC
P: 800.233.8366
F: 800.526.0841
E: ADS@CORNELLIRON.COM

Unless otherwise specified, dimensions are in inches & tolerances are:

0.000 = +/- 0.031
FRACTIONAL = +/- 1/32
ANGLES = +/- 1/2 DEG

TITLE: WIND LOAD CONFIGURATION NON-INSULATED ROLLING STEEL DOOR CP0020 SLAT IMPACT RATED

| DRAWN BY: | SIZE: | SCALE: | SHEET: |
|---|---|---|---|
| TJE | B | AS NOTED | 5/8 |

DWG NO: ES-16-67-CIW

| L'TR | REVISION | DATE | BY | E.C.O. |
|---|---|---|---|---|
| * | ORIGINAL ISSUE | 11/19/14 | TJE | 1616 |
| A | REVISED AVAILABLE CONFIGURATIONS | 03/15/16 | TJE | 1616 |
| B | REVISED MAXIMUM HEIGHT NOTE | 08/10/16 | TJE | 1616 |

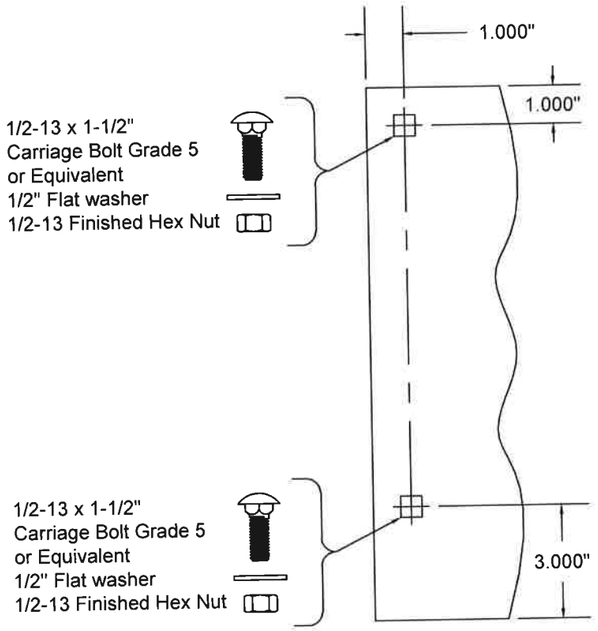


THRU 6"Ø SHAFT ASSEMBLY
14" THRU 16" COIL DIMENSION
MIN. THICKNESS 0.172" ASTM A36 STEEL
OR ASTM A480 STAINLESS STEEL,
TYPES 304 OR 316, MIN. 36 KSI YIELD STRENGTH
SCALE: 1-1/2" = 1'-0"

NOTE:
WHEN A 8"Ø OR LARGER SHAFT ASSEMBLY IS PROVIDED, THERE IS A 2" EXTENSION ON THE BOTTOM OF THE BRACKET.

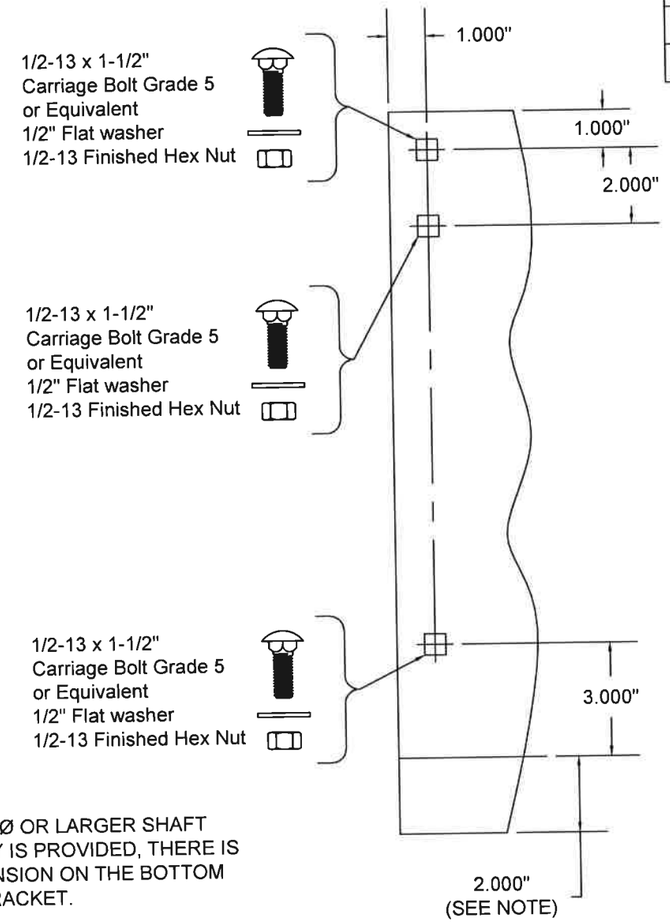


THRU 10"Ø SHAFT ASSEMBLY
17" AND LARGER COIL DIMENSION
MIN. THICKNESS 0.240" ASTM A36 STEEL
OR ASTM A480 STAINLESS STEEL,
TYPES 304 OR 316, MIN. 36 KSI YIELD STRENGTH
SCALE: 1-1/2" = 1'-0"

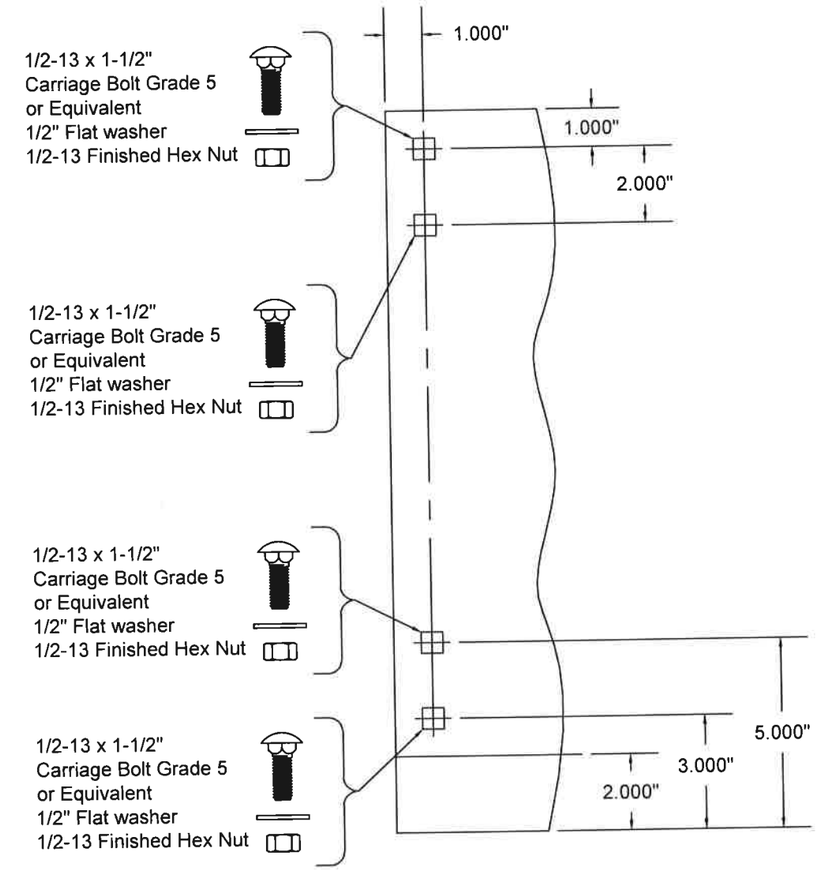


12"Ø SHAFT ASSEMBLY
17" AND LARGER COIL DIMENSION
MIN. THICKNESS 0.240" ASTM A36 STEEL
OR ASTM A480 STAINLESS STEEL,
TYPES 304 OR 316, MIN. 36 KSI YIELD STRENGTH
SCALE: 1-1/2" = 1'-0"

STATE OF TEXAS
SHAWN PATRICK KELLEY
104034
LICENSED
PROFESSIONAL ENGINEER
AUG 15 2016


CORNELL
Innovative door solutions.
24 ELMWOOD AVE 1901 S. LITCHFIELD RD
MOUNTAINTOP, PA GOODYEAR, AZ
800 TULIP DRIVE
GASTONIA, NC
P: 800.233.8366
F: 800.526.0841
E: ADS@CORNELLIRON.COM


Unless otherwise specified, dimensions are in inches & tolerances are:
0.000 = +/- 0.031
FRACTIONAL = +/- 1/32
ANGLES = +/- 1/2 DEG

| TITLE: | DRAWN BY: | SIZE: | SCALE: | SHEET: |
|---|---|---|---|---|
| WIND LOAD CONFIGURATION NON-INSULATED ROLLING STEEL DOOR CP0020 SLAT IMPACT RATED | TJE | B | AS NOTED | 6/8 |
| | DWG NO: ES-16-67-CIW | | | |

| L'TR | REVISION | DATE | BY | E.C.O. |
|---|---|---|---|---|
| * | ORIGINAL ISSUE | 11/19/14 | TJE | 1616 |
| A | REVISED AVAILABLE CONFIGURATIONS | 03/15/16 | TJE | 1616 |
| B | REVISED MAXIMUM HEIGHT NOTE | 08/10/16 | TJE | 1616 |

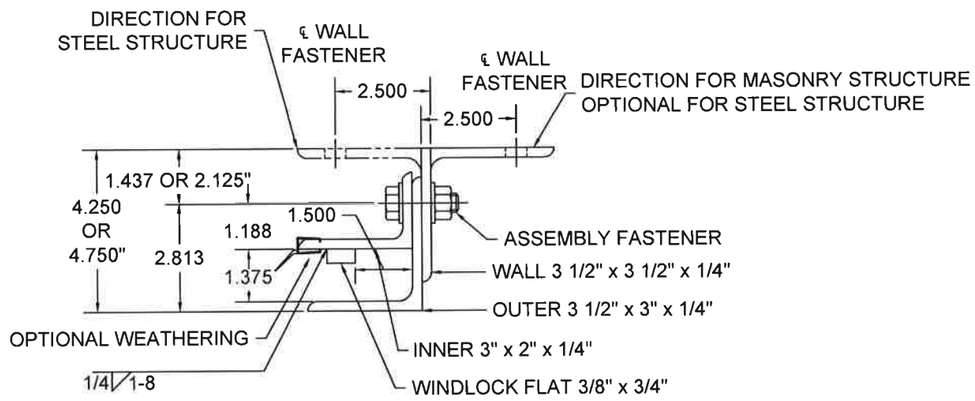


GUIDE ASSEMBLY TYPE DC 1
SCALE: 3" = 1'-0"

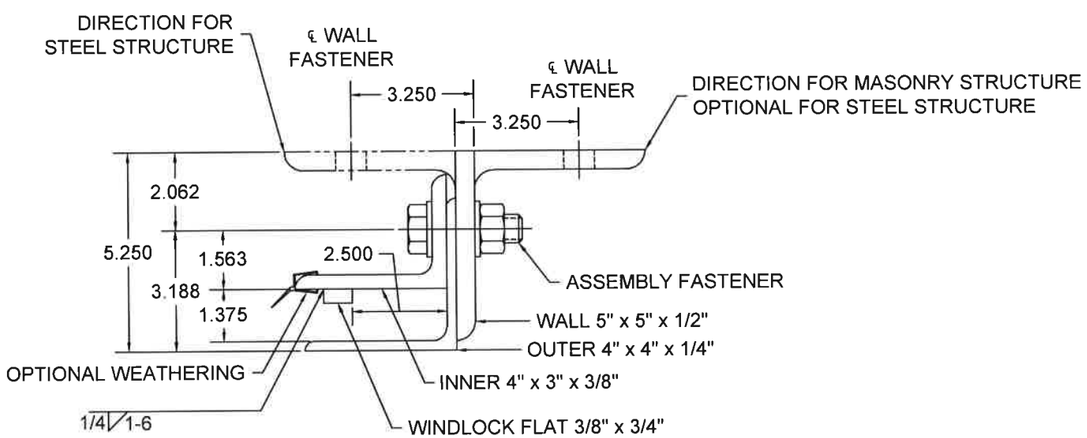


GUIDE ASSEMBLY TYPE DC 2
SCALE: 3" = 1'-0"

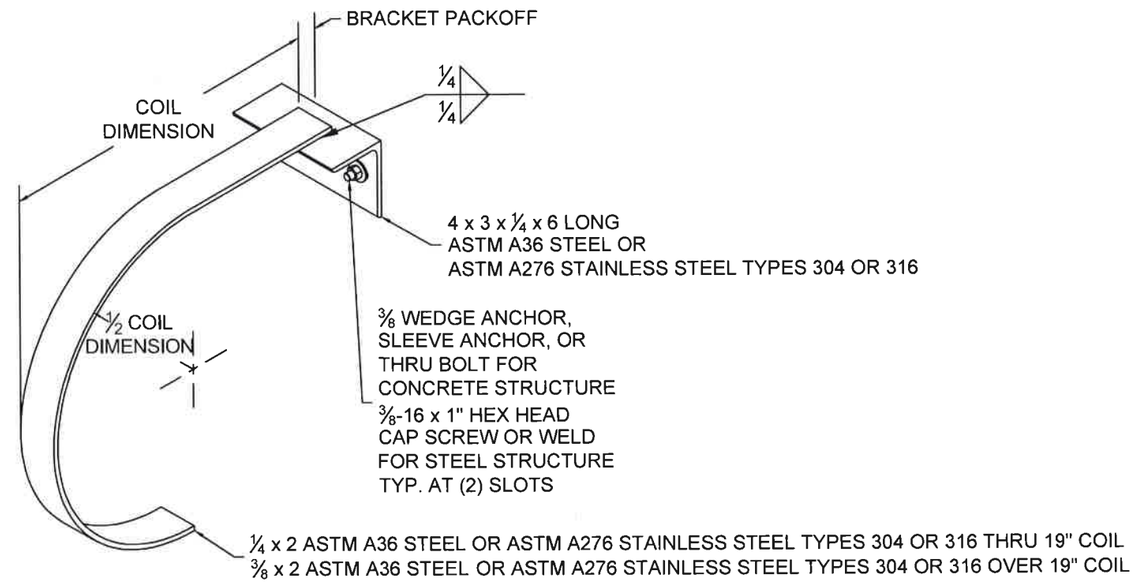


MID-HOOD SUPPORT
*(WHEN REQUIRED)*
*"D" SHAPE DEPICTED, SQUARE STYLE ALSO AVAILABLE*
SCALE: NTS

AUG 15 2016


CORNELL Innovative door solutions.

24 ELMWOOD AVE 1901 S. LITCHFIELD RD
MOUNTAINTOP, PA GOODYEAR, AZ
800 TULIP DRIVE
GASTONIA, NC
P: 800.233.8366
F: 800.526.0841
E: ADS@CORNELLIRON.COM


Unless otherwise specified, dimensions are in inches & tolerances are:

0.000 = +/- 0.031
FRACTIONAL = +/- 1/32
ANGLES = +/- 1/2 DEG

TITLE: WIND LOAD CONFIGURATION
NON-INSULATED ROLLING STEEL DOOR
CP0020 SLAT IMPACT RATED

| DRAWN BY: | SIZE: | SCALE: | SHEET: |
|---|---|---|---|
| TJE | B | AS NOTED | 7/8 |

DWG NO: ES-16-67-CIW

| L'TR | REVISION | DATE | BY | E.C.O. |
|---|---|---|---|---|
| * | ORIGINAL ISSUE | 11/19/14 | TJE | 1616 |
| A | REVISED AVAILABLE CONFIGURATIONS | 03/15/16 | TJE | 1616 |
| B | REVISED MAXIMUM HEIGHT NOTE | 08/10/16 | TJE | 1616 |

**CP0020 -Galvanized or Stainless Steel**

| | | | | | | | | | | Concrete Minimum 3,000 PSI Compressive Strength (Anchors are the same diameter as assembly fasteners) | | | | | | | |
|---|---|---|---|---|---|---|---|---|---|---|---|---|---|---|---|---|---|
| | | | | | | | | | | Hilti Kwik Bolt 3 | | | | Simpson Wedge All | | | |
| DBG Up To | Minimum Thickness | Maximum Pressure | Windlock Flat Location | Slip | Windlock | Guide Assembly | Windlock Weld Pitch | Assembly Fastener Diameter | Assembly Fastener Spacing | Max O.C. | Embed | Min. Wall Thick. | Edge Dist | Max O.C. | Embed | Min. Wall Thick. | Edge Dist |
| 14'-5" | 0.0296 | 65 PSF | 1 1/2 | 0.656 | CP1152 & CP1153 | DC1 | 8 | 1/2 | 12 | 8 | 3 1/2 | 5 1/4 | 5 3/4 | 8 | 4 1/2 | 6 3/4 | 5 3/4 |
| 25'-5" | 0.0296 | 65 PSF | 2 1/2 | 1.656 | CP1152 & CP1153 | DC2 | 6 | 3/4 | 15 | 11 | 4 3/4 | 7 1/8 | 7 1/2 | 11 | 5 | 7 1/2 | 7 1/2 |

**CP0020 - Galvanized or Stainless Steel, Cont.**

| | Filled CMU | | | Steel (Wall anchors are the same diameter as assembly fasteners) | | | | | Superimposed Loads (at Maximum Pressure) | | | |
|---|---|---|---|---|---|---|---|---|---|---|---|---|
| | Through Bolt | | | Welded | | Through Bolt | Tapped | | | | | |
| DBG Up To | Max. O.C. | Dia. | Edge Dist | Max O.C. | Slot Size | Max O.C. | Max O.C. | Min. Thickness | Vx (+) | Vy (+) | Vx (-) | Vy (-) |
| 14'-5" | 8 | 1/2 | 5 3/4 | 12 | 9/16 x 3/4 | 12 | 12 | 1/4 | 1928 | 473 | 1906 | 473 |
| 25'-5" | 8 | 3/4 | 7 1/2 | 15 | 13/16 x 1 | 15 | 15 | 3/8 | 3147 | 828 | 3132 | 829 |

STATE OF TEXAS
SHAWN PATRICK KELLEY
104034
LICENSED
PROFESSIONAL ENGINEER
AUG 15 2016


CORNELL Innovative door solutions.

24 ELMWOOD AVE 1901 S. LITCHFIELD RD
MOUNTAINTOP, PA GOODYEAR, AZ
800 TULIP DRIVE
GASTONIA, NC
P: 800.233.8366
F: 800.526.0841
E: ADS@CORNELLIRON.COM


Unless otherwise specified, dimensions are in inches & tolerances are:

0.000 = +/- 0.031
FRACTIONAL = +/- 1/32
ANGLES = +/- 1/2 DEG

TITLE: WIND LOAD CONFIGURATION
NON-INSULATED ROLLING STEEL DOOR
CP0020 SLAT IMPACT RATED

| DRAWN BY: | SIZE: | SCALE: | SHEET: |
|---|---|---|---|
| TJE | B | AS NOTED | 8/8 |

DWG NO: ES-16-67-CIW