NOTES:

1. IMPACT RESISTANT GLAZING OPTION – IMPACT RESISTANT GLAZING SYSTEM MAY BE INSTALLED IN TOP OR INTERMEDIATE SECTION (WITH OR WITHOUT DECORATIVE INSERTS). GLAZING SHALL BE 1/4" POLYCARBONATE. MAXIMUM GLAZING DIMENSIONS SHALL BE 14" x 46" CUTOUT, FASTENED WITH A MINIMUM #8 X 1" SMS: 3X ALONG THE HORIZONTAL AND 3X ALONG THE VERTICAL. SEE DETAIL E ON SHEET 2 FOR ASSEMBLY DETAILS.

2. NON-IMPACT REISTANT GLAZING OPTION – .090" MINIMUM SSB GLAZING IN MOLDED FRAMES SCREWED TOGETHER WITH A MINIMUM OF (10) #6x1" SCREWS (3X ALONG THE HORIZONTAL AND 2X ALONG THE VERTICAL) INSTALLED IN TOP OR INTERMEDIATE SECTION (WITH OR WITHOUT DECORATIVE INSERTS) MEETS UNIFORM STATIC WIND PRESSURES SHOWN ON THIS DRAWING. MAXIMUM GLAZING DIMENSIONS SHALL BE 15" x 46" CUTOUT. GLAZING IS NOT IMPACT RESISTANT AND DOES NOT MEET THE REQUIREMENTS FOR WIND-BORNE DEBRIS REGIONS.

3. VINYL OR WOOD DOOR STOP NAILED A MAXIMUM OF 6" O.C. MUST OVERLAP TOP AND BOTH ENDS OF PANELS MINIMUM 7/16" TO MEET NEGATIVE PRESSURES.

4. KEY LOCK, SLIDE LOCK, OR OPERATOR REQUIRED.

5. LOUVER OPTION – .040" MINIMUM LOUVERS IN MOLDED FRAMES SCREWED TOGETHER WITH A MINIMUM OF (10) #8x1" SCREWS (3X ALONG THE HORIZONTAL AND 2X ALONG THE VERTICAL) INSTALLED IN THE BOTTOM SECTION. MAXIMUM LOUVER DIMENSIONS SHALL BE 15" x 19" CUTOUT. LOUVERS ARE NOT IMPACT RESISTANT AND DO NOT MEET THE REQUIREMENTS FOR WIND-BORNE DEBRIS REGIONS.

6. FACER STEEL TO HAVE A MINIMUM 27 GA THICKNESS AND BACKER STEEL TO HAVE A MINIMUM 29 GA THICKNESS.

7. A 4-1/2" x 6" x 22 GA BACKER PLATE IS TO BE LOCATED AT EVERY INTERMEDIATE AND OUTER END HINGE LOCATION.

8. THE DESIGN OF THE SUPPORTING STRUCTURAL ELEMENTS SHALL BE THE RESPONSIBILITY OF THE PROFESSIONAL OF RECORD FOR THE BUILDING OR STRUCTURE AND IN ACCORDANCE WITH CURRENT BUILDING CODES FOR THE LOADS LISTED ON THIS DRAWING.

9. DOOR JAMB TO BE MINIMUM 2x4 STRUCTURAL GRADE LUMBER. REFER TO JAMB CONNECTION SUPPLEMENT FOR ATTACHMENT TO SUPPORTING STRUCTURE.

10. FOR LOW HEAD ROOM LIFT CONDITIONS, TOP BRACKET SHALL BE A 13 GA LHR 7/4 TOP BRACKET WITH A MINIMUM OF (3) 1/4-14x7/8" SELF DRILLING CRIMPTITE SCREWS IN LIEU OF THE BRACKET SHOWN ON THIS DRAWING. U-BAR ON TOP SECTION SHALL BE INSTALLED ON TOP OF LHR TOP BRACKETS.

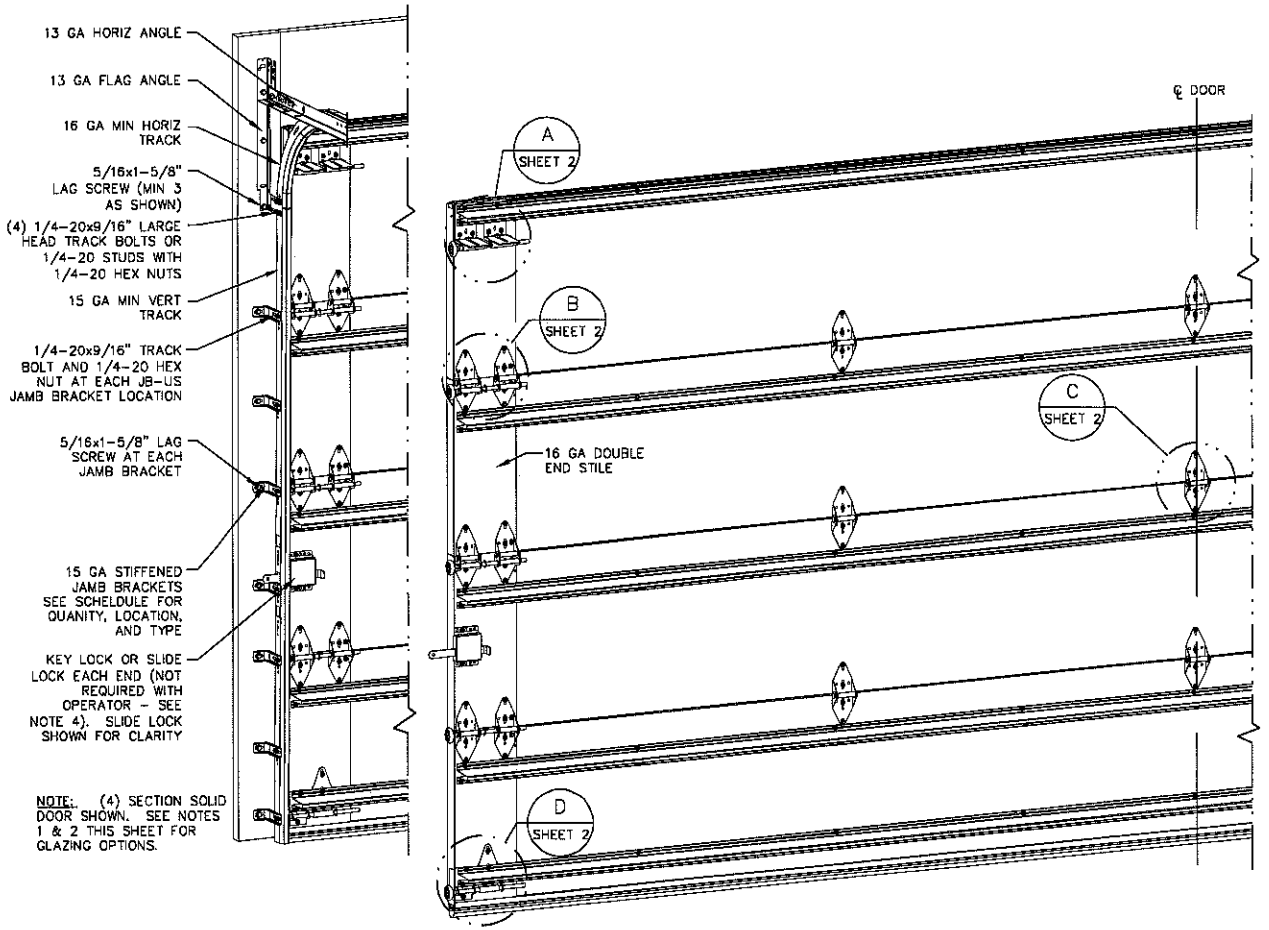

REVISIONS

P1 REVISED MODELS GRT 1/22/14

P2 UPDATED GLAZING AND LOUVER DESCRIPTION GRT 5/9/14

SUPERIMPOSED DESIGN PRESSURE LOADS ON SUPPORTING STRUCTURE

DOOR WIDTH	DOOR HEIGHT	UNIFORM LOAD EACH JAMB (PLF)
17'-2"	ALL	+197.4/-214.6
18'-2"	ALL	+208.9/-227.1

JAMB BRACKET SCHEDULE

DOOR HEIGHT	NO. OF SECTIONS	NO. OF JAMB BRACKETS (EACH JAMB)	LOCATION OF CENTERLINE OF JAMB BRACKETS MEASURED FROM BOTTOM OF TRACK (ALL DIMENSIONS ± 2")
6'-6"	4	7	2" (JB-US), 10" (JB-US), 21-3/4" (JB-US), 29-3/4" (JB-US), 39" (JB-US), 48" (JB-US), 57-1/4" (JB-US)
7'-0"	4	7	2" (JB-US), 10" (JB-US), 21-3/4" (JB-US), 29-3/4" (JB-US), 42" (JB-US), 52-1/2" (JB-US), 63-1/4" (JB-US)
7'-6"	4 OR 5	8	2" (JB-US), 10" (JB-US), 18-3/4" (JB-US), 26-3/4" (JB-US), 36" (JB-US), 45" (JB-US), 54-1/4" (JB-US), 74-1/2" (JB-US)
8'-0"	4 OR 5	8	2" (JB-US), 10" (JB-US), 21-3/4" (JB-US), 29-3/4" (JB-US), 39" (JB-US), 48" (JB-US), 57-1/2" (JB-US), 75-1/2" (JB-US)
> 8'-0"			SEE NOTE BELOW

NOTE:
(JB-US) FOLLOWING DIMENSION DENOTES SLOTTED JAMB BRACKET ATTACHED TO TRACK WITH 1/4-20x9/16" TRACK BOLT AND NUT AS SHOWN ABOVE.

ALL DOORS GREATER THAN 8' IN HEIGHT REQUIRE USE OF CONTINUOUS WALL ANGLE. SEE SUPPLEMENT TRACK CHART FOR DETAILS.

MARK A. SAWICKI, PE
2501 S. STATE HWY 121, SUITE 200
LEWISVILLE, TX 75067
FL PE 72813
TX PE 106291

PROFESSIONAL ENGINEER'S SEAL PROVIDED ONLY FOR VERIFICATION OF WINDLOAD CONSTRUCTION DETAILS.

STATE OF TEXAS
MARK A SAWICKI
106291
LICENSED
PROFESSIONAL ENGINEER

6/4/14

Wayne® Dalton

A DIVISION OF OVERHEAD DOOR CORP
3395 ADDISON DRIVE
PENSACOLA, FLORIDA 32514
(850) 474-9890

STATIC PRESSURE RATINGS		APPROVED SIZES		SCALE: N.T.S.		SIZE: A
DESIGN (PSF):	+23.00/-25.00	MAX WIDTH:	18'-2"		DATE	NAME
TEST (PSF):	+34.50/-37.50	MAX HEIGHT:	24'-0"	DRAWN	6/12/13	GRT
IMPACT/CYCLIC RATED (YES/NO):	YES	MAX SECTION HEIGHT:	24"	CHECKED		

MODELS 4600/4650/6600/8300/8500/5150/5200/TM515/TM525

SHEET 1 OF 2

WINDLOAD SPECIFICATION OPTION CODE 2251

DRAWING PART NO. 352075

REV. P2

(2) 12 GA COMMERCIAL 'L' FRAME TOP BRACKETS ATTACHED WITH (4) 1/4-20x7/8" SELF DRILLING SCREWS (2 THROUGH STRUT AND TOP BRACKET)

13 GA ROLLER SLIDE ATTACHED TO BRACKET WITH 5/16-18 BOLT & NUT IN THE CENTER SLOT

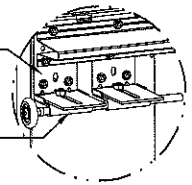

DETAIL A

ADD (2) 1/4-14x7/8" SELF DRILLING CRIMPTITE SCREWS (INSIDE OF EACH INSIDE END HINGE)

2" STEEL ROLLER WITH 9" GRADE 1144 OR EQUIVALENT STEM AND 7/16" PUSH NUT AT EACH ROLLER LOCATION LOCATED BETWEEN THE BRACKET OR HINGE (EXCEPT PUCHNUT LOCATED ON THE TOP AND BOTTOM ROLLER IS LOACTED OUTSIDE OF BOTH BRACKETS). 1/4" MAX BETWEEN PUSH NUT AND OUTER HINGE.

(2) 14 GA WIDE BODY END HINGES EACH ATTACHED WITH (4) 1/4-14x7/8" SELF DRILLING CRIMPTITE SCREWS

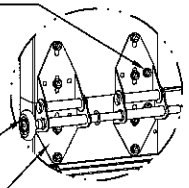

DETAIL B

14 GA WIDE BODY INTERMEDIATE HINGE ATTACHED WITH (4) 1/4-14x7/8" SELF DRILLING CRIMPTITE SCREWS

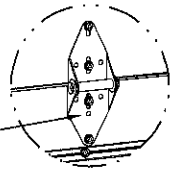

DETAIL C

12 GA EXTENSION BRACKET ATTACHED WITH (3) 1/4-14x7/8" SELF DRILLING CRIMPTITE SCREWS (2 THROUGH STRUT AND BRACKET)

14 GA BOTTOM BRACKET ATTACHED WITH (2) 1/4-14x7/8" SELF DRILLING CRIMPTITE SCREWS THROUGH STRUT AND BOTTOM BRACKET AND (1) 1/4-14x5/8" SELF DRILLING TAMPER RESISTANT SCREW

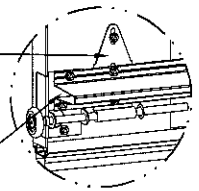

DETAIL D

HINGE & BACKER PLATE LOCATIONS

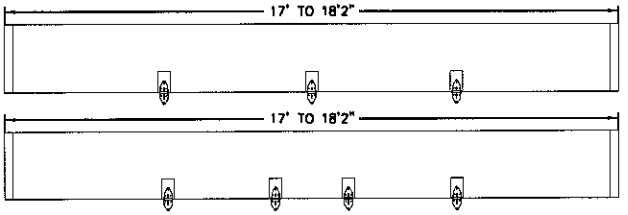

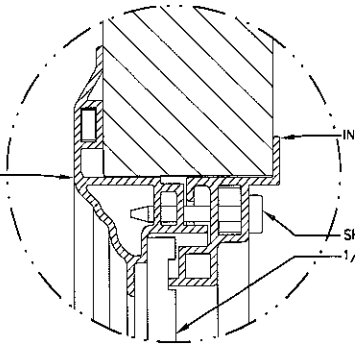

DETAIL E

(10) SECTION DOORS WITH (11) 3" 18 GA 80 KSI U-BARS LOCATED AS SHOWN

(9) SECTION DOORS WITH (10) 3" 18 GA 80 KSI U-BARS LOCATED AS SHOWN

(8) SECTION DOORS WITH (9) 3" 18 GA 80 KSI U-BARS LOCATED AS SHOWN

(7) SECTION DOORS WITH (8) 3" 18 GA 80 KSI U-BARS LOCATED AS SHOWN

(6) SECTION DOORS WITH (7) 3" 18 GA 80 KSI U-BARS LOCATED AS SHOWN

(5) SECTION DOORS WITH (6) 3" 18 GA 80 KSI U-BARS LOCATED AS SHOWN

(4) SECTION DOORS WITH (5) 3" 18 GA 80 KSI U-BARS LOCATED AS SHOWN

ALL U-BARS SHALL BE ATTACHED WITH (2) 1/4-14x7/8" SELF DRILLING CRIMPTITE SCREWS AT EACH HINGE LOCATION AND HALF WAY BETWEEN ALL HINGES. A MINIMUM OF (18) FASTENERS ARE TO BE USED.

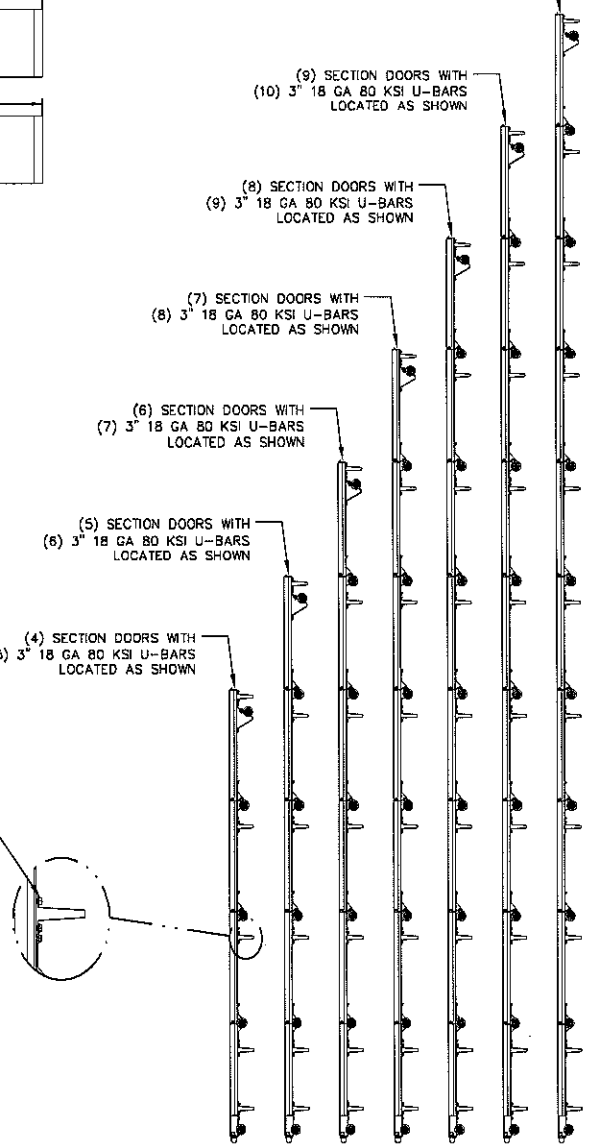

REVISIONS

P1 REVISED MODELS GRT 1/22/14

P2 UPDATED GLAZING AND LOUVER DESCRIPTION GRT 5/9/14

STATE OF TEXAS
MARK A SAWICKI
106291
LICENSED
PROFESSIONAL ENGINEER

6/4/14

MARK A. SAWICKI, PE
2501 S. STATE HWY 121, SUITE 200
LEWISVILLE, TX 75067
FL PE 72613
TX PE 106291

PROFESSIONAL ENGINEER'S SEAL PROVIDED ONLY FOR VERIFICATION OF WINDLOAD CONSTRUCTION DETAILS.

Wayne® Dalton
A DIVISION OF OVERHEAD DOOR CORP
3395 ADDISON DRIVE
PENSACOLA, FLORIDA 32514
(850) 474-9890

STATIC PRESSURE RATINGS		APPROVED SIZES		SCALE: N.T.S.		SIZE: A
DESIGN (PSF):	+23.00/-25.00	MAX WIDTH:	18'-2"		DATE	NAME
TEST (PSF):	+34.50/-37.50	MAX HEIGHT:	24'-0"	DRAWN	6/12/13	GRT
IMPACT/CYCLIC RATED (YES/NO):	YES	MAX SECTION HEIGHT:	24"	CHECKED		

MODELS 4600/4650/6600/8300/8500/5150/5200/TM515/TM525

SHEET 2 OF 2

WINDLOAD SPECIFICATION OPTION CODE 2251

DRAWING PART NO. 352075

REV. P2