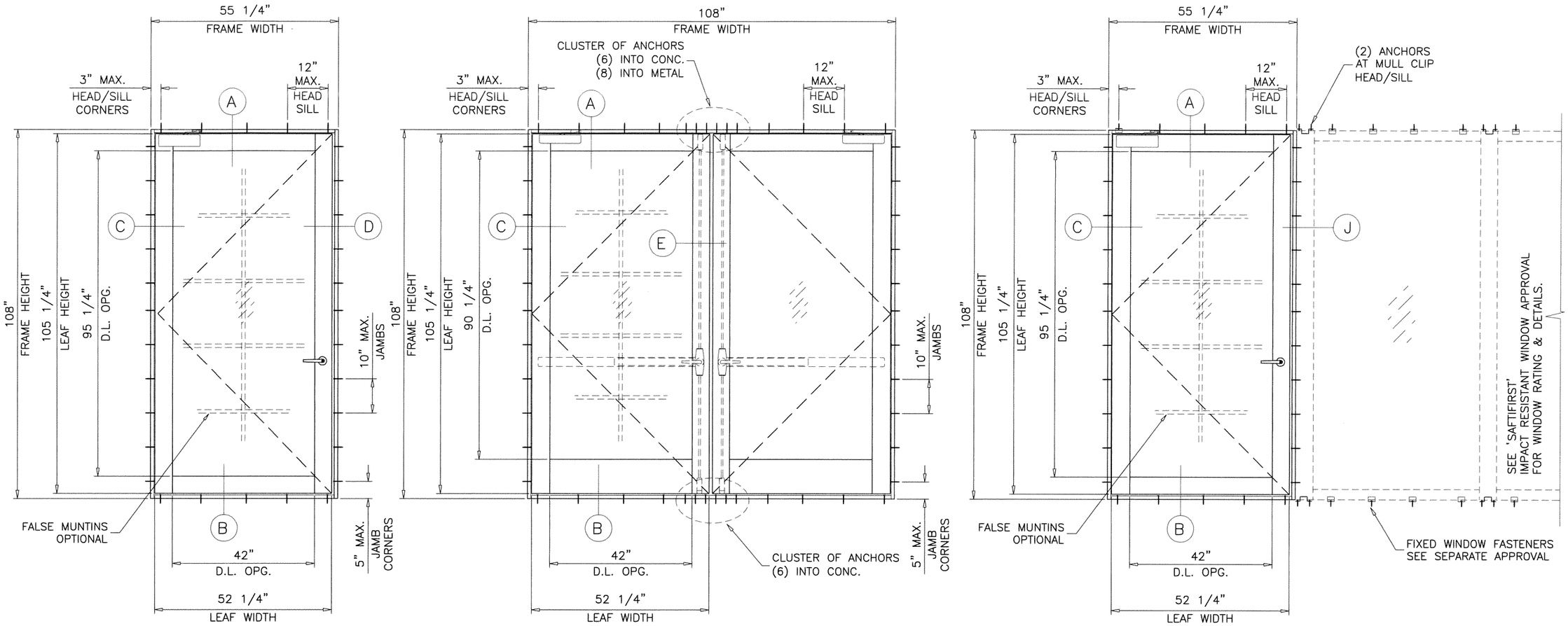

TYPICAL ELEVATIONS

MAXIMUM DESIGN LOAD RATING =	+ 80.0 PSF
(FOR SIZES SHOWN ABOVE OR SMALLER)	− 80.0 PSF

THESE DOORS ARE RATED FOR LARGE & SMALL MISSILE IMPACT.
SHUTTERS ARE NOT REQUIRED.

GPX FIRE RATED OUTSWING DOOR

SEE SHEET 1 FOR DESIGN LOAD CAPACITY OF SINGLE (X) AND DOUBLE (XX) DOORS W/O TRANSOM.

SEE SHEET 2 FOR DESIGN LOAD CAPACITY OF SINGLE (O/X) AND DOUBLE (O/XX) DOORS WITH TRANSOM.

DOORS CAN ALSO BE USED WITH SAFTIFIRST FIRE RATED WINDOWS. FOR DOORS WITH FIXED WDW. SYSTEM SEE SEPARATE APPROVAL FOR DOOR MULLION CAPACITY AND ANCHORING DETAILS.

THE LOWEST VALUE RESULTING FROM DOOR CAPACITY CHARTS OR FIXED WINDOW APPROVAL WILL APPLY TO ENTIRE SYSTEM.

DOORS APPROVED FOR INSTALLATIONS WHERE WATER INFILTRATION RESISTANCE IS REQUIRED.

THIS PRODUCT HAS BEEN DESIGNED AND TESTED TO COMPLY WITH THE REQUIREMENTS OF THE 2006 INTERNATIONAL RESIDENTIAL CODE (IRC) AND 2006 INTERNATIONAL BUILDING CODE (IBC) WITH TEXAS REVISIONS. TESTING PERFORMED IN ACCORDANCE WITH FLORIDA PROTOCOLS TAS201, 202 & 203.

ANCHORS SHALL BE AS LISTED, SPACED AS SHOWN ON DETAILS, ANCHORS EMBEDMENT TO BASE MATERIAL SHALL BE BEYOND WALL DRESSING OR STUCCO.

ANCHORING OR LOADING CONDITIONS NOT SHOWN IN THESE DETAILS ARE NOT PART OF THIS APPROVAL.

MATERIALS INCLUDING BUT NOT LIMITED TO STEEL/METAL SCREWS, THAT COME INTO CONTACT WITH OTHER DISSIMILAR MATERIALS SHALL MEET THE REQUIREMENTS OF THE INTERNATIONAL BUILDING CODE WITH TEXAS REVISIONS.

Sealed 11/12/15

STATE OF TEXAS
JAVAD AHMAD
106516
LICENSED
PROFESSIONAL ENGINEER

AL-FAROOQ CORPORATION
ENGINEERS & PRODUCT DEVELOPMENT
1235 S.W. 87 AVE
MIAMI, FLORIDA 33174
TEL. (305) 264-8100 FAX. (305) 262-6978
COMP-ANL\W15-86SF

GPX FIRE RATED OUTSWING DOOR (L.M.I.)

SAFTIFIRST
100 NORTH HILL DRIVE, SUITE 12
BRISBANE, CA. 94005-1010
TEL. (415) 230-6740 FAX. (415) 230-6741

revisions:

no	date	by	description

date: 11-03-15
scale: 3/8"=1'-0"
dr. by: HAMID
chk. by:

drawing no.
W15-86

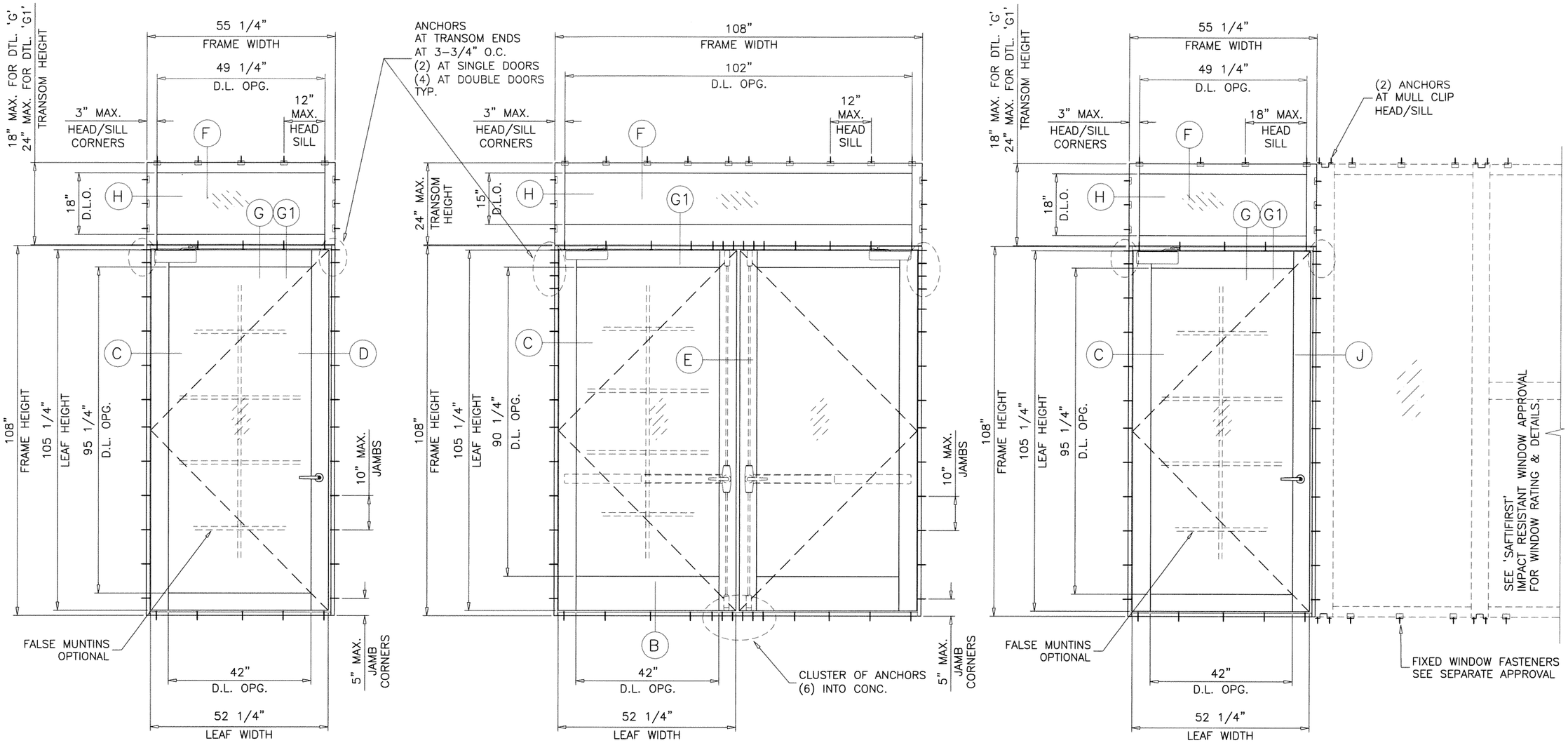

TYPICAL ELEVATIONS

MAXIMUM DESIGN LOAD RATING	= + 80.0 PSF
(FOR SIZES SHOWN ABOVE OR SMALLER)	– 80.0 PSF

Sealed 11/12/15

STATE OF TEXAS
JAVAD AHMAD
106516
LICENSED
PROFESSIONAL ENGINEER

AL-FAROOQ CORPORATION
ENGINEERS & PRODUCT DEVELOPMENT
1235 S.W. 87 AVE
MIAMI, FLORIDA 33174
TEL. (305) 264-8100 FAX. (305) 262-6978
COMP-ANL\W15-86SF

GPX FIRE RATED OUTSWING DOOR (L.M.I.)

SAFTIFIRST
100 NORTH HILL DRIVE, SUITE 12
BRISBANE, CA. 94005-1010
TEL. (415) 230-6740 FAX. (415) 230-6741

revisions:

no	date	by	description

date: 11-03-15
scale: 3/8"=1'-0"
dr. by: HAMID
chk. by:

drawing no.
W15-86

sheet 2 of 9

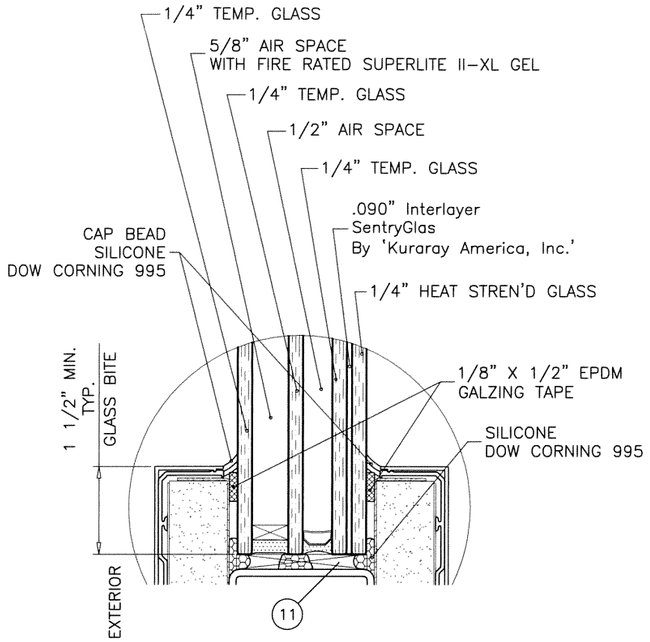

GLAZING DETAIL DOOR LEAF

2-3/16" OVERALL INSUL. LAM. GLASS

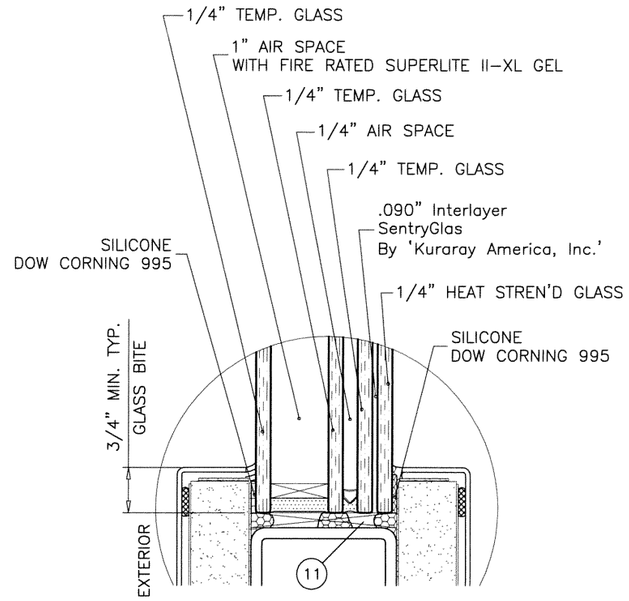

ALT. GLAZING DETAIL DOOR LEAF

2-5/16" OVERALL INSUL. LAM. GLASS

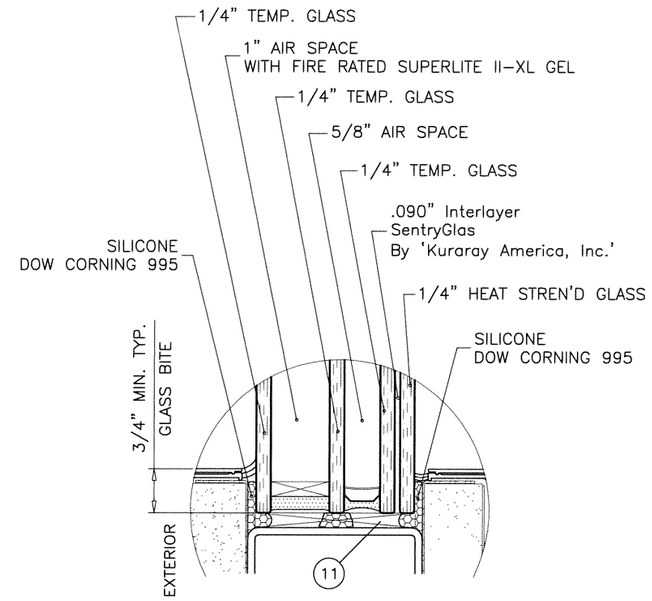

GLAZING DETAIL TRANSOM

2-11/16" OVERALL INSUL. LAM. GLASS

Sealed 11/12/15

STATE OF TEXAS
JAVAD AHMAD
106516
LICENSED
PROFESSIONAL ENGINEER

AL-FAROOQ CORPORATION
ENGINEERS & PRODUCT DEVELOPMENT
1235 S.W. 87 AVE
MIAMI, FLORIDA 33174
TEL. (305) 264-8100 FAX. (305) 262-6978

COMP-ANL\W15-86SF

GPX FIRE RATED OUTSWING DOOR (L.M.I.)

SAFTIFIRST
100 NORTH HILL DRIVE, SUITE 12
BRISBANE, CA. 94005-1010
TEL. (415) 230-6740 FAX. (415) 230-6741

revisions:

no	date	by	description

date: 11-03-15

scale: 3/8" = 1"

dr. by: HAMID

chk. by:

drawing no.

W15-86

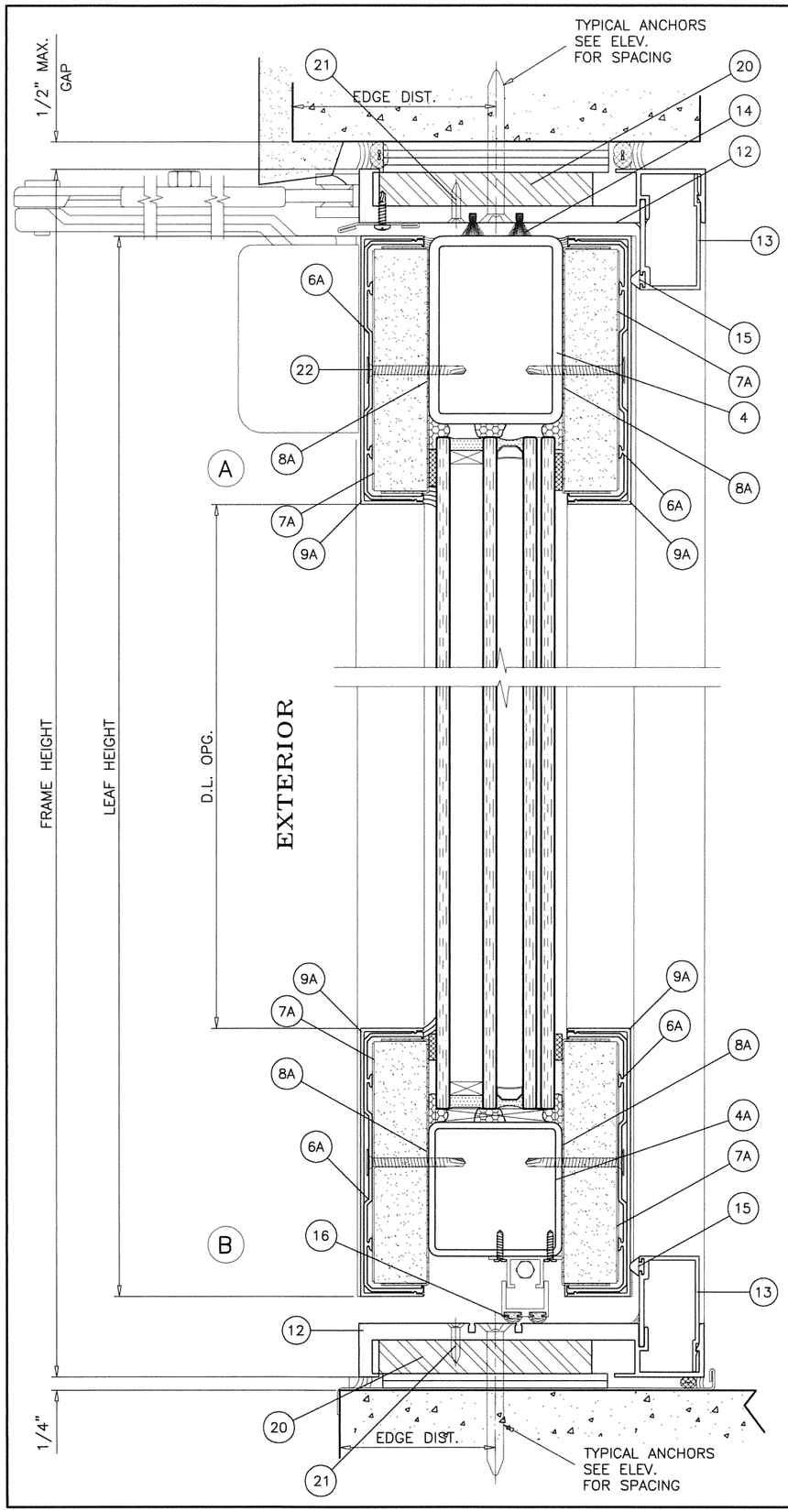

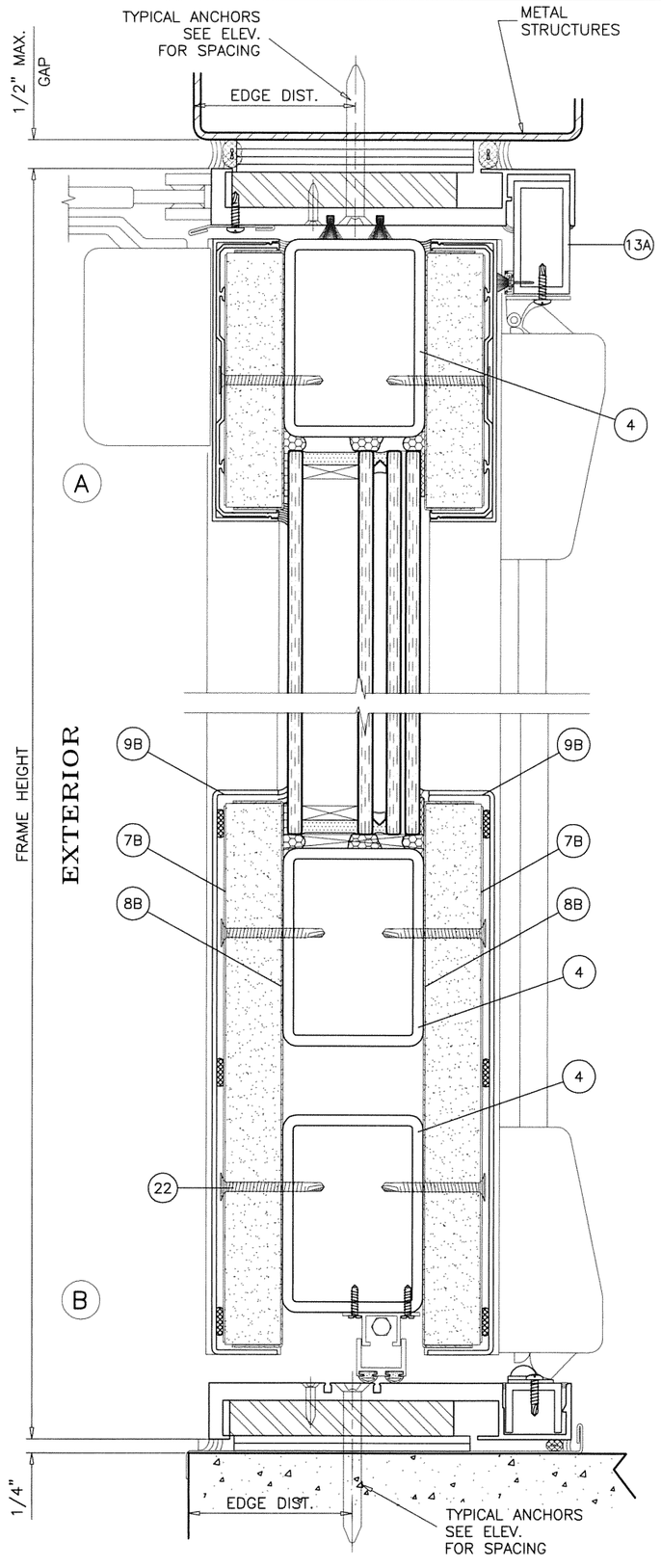

METAL STRUCTURES NOT BY SAFTIFIRST
MUST SUPPORT LOADS IMPOSED BY GLAZING SYSTEM AND TRANSFER THEM TO THE BUILDING STRUCTURE.

TYPICAL ANCHORS: SEE ELEV. FOR SPACING

AT DOORS

5/16" DIA ULTRACON BY 'ELCO' (Fu=177 KSI, Fy=155 KSI)

DIRECTLY INTO CONCRETE AND MASONRY
WITH 1-3/4" MIN. EMBED INTO CONC.
WITH 1-1/4" MIN. EMBED INTO MASONRY

ANCHOR EDGE DISTANCES

INTO CONCRETE = 3-1/8" MIN.

5/16" DIA. SELF DRILLING SCREWS (Fu=120 KSI, Fy=92 KSI)

INTO METAL STRUCTURES

STEEL : 1/8" THK. MIN. (Fy = 36 KSI MIN.)
ALUMINUM : 1/8" THK. MIN. (6063-T6 MIN.)
(STEEL IN CONTACT WITH ALUMINUM TO BE PLATED OR PAINTED)

ANCHOR EDGE DISTANCES

INTO METAL STRUCTURE = 1" MIN.

SEALANTS:

ALL FRAME CORNERS, JOINTS, MULLION SEAMS AND PERIMETER OF GLAZING BEAD TO FRAME SEALED WITH SILICONE SEALANT.

Sealed 11/12/15

STATE OF TEXAS
JAVAD AHMAD
106516
LICENSED PROFESSIONAL ENGINEER

AL-FAROOQ CORPORATION
ENGINEERS & PRODUCT DEVELOPMENT
1235 S.W. 87 AVE
MIAMI, FLORIDA 33174
TEL. (305) 264-8100 FAX. (305) 262-6978
COMP-ANL\W15-86SF

GPX FIRE RATED OUTSWING DOOR (L.M.I.)

SAFTIFIRST
100 NORTH HILL DRIVE, SUITE 12
BRISBANE, CA. 94005-1010
TEL. (415) 230-6740 FAX. (415) 230-6741

revisions:			
no	date	by	description

date: 11-03-15
scale: 3/8" = 1"
dr. by: HAMID
chk. by:

drawing no. W15-86

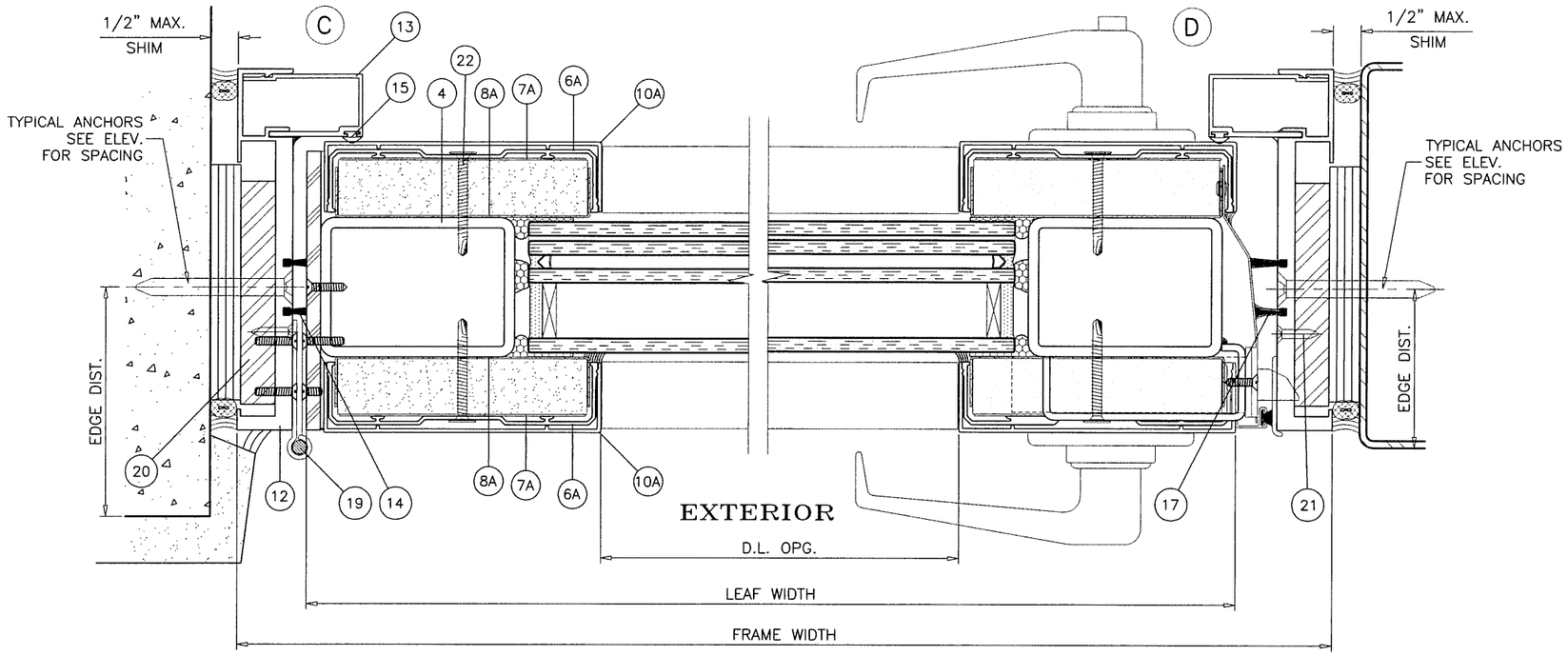

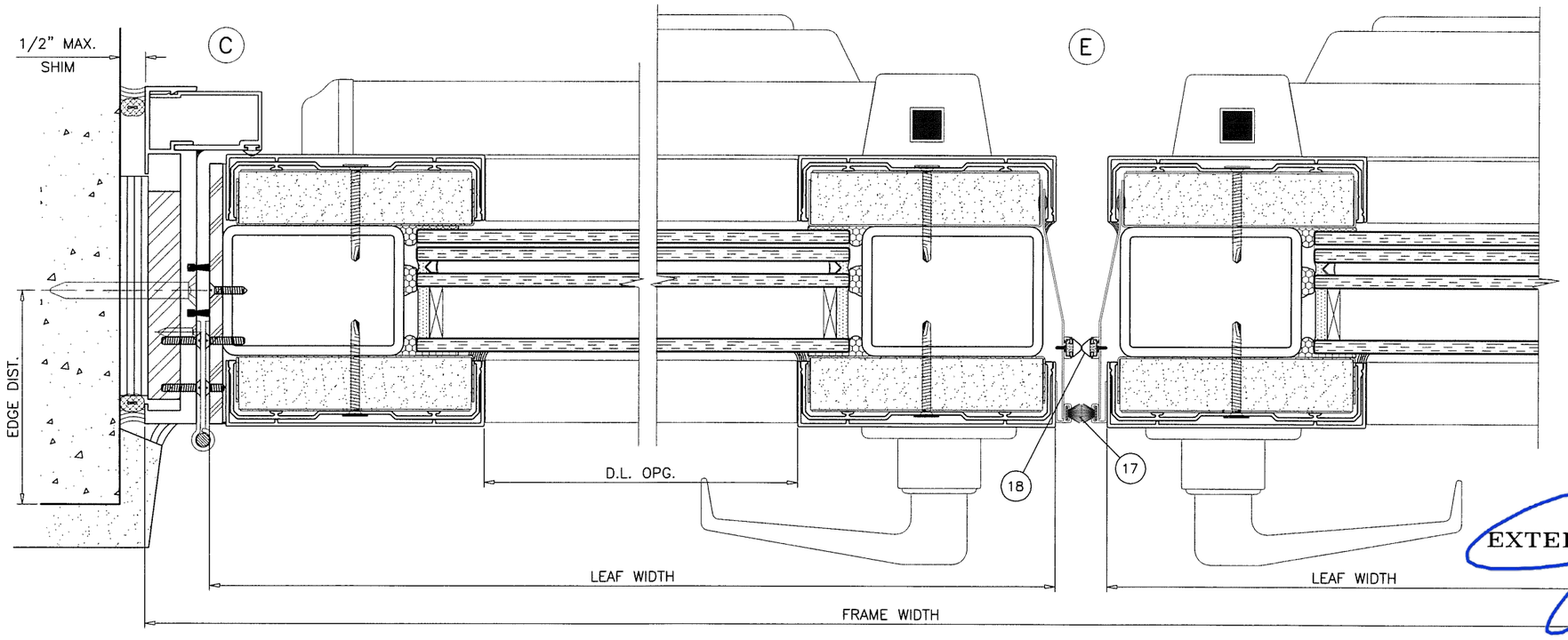

STATE OF TEXAS
JAVAD AHMAD
106516
LICENSED
PROFESSIONAL ENGINEER

Sealed 11/12/15

AL-FAROOQ CORPORATION
ENGINEERS & PRODUCT DEVELOPMENT
1235 S.W. 87 AVE
MIAMI, FLORIDA 33174
TEL. (305) 264-8100 FAX. (305) 262-6978

COMP-ANL\W15-86SF

GPX FIRE RATED OUTSWING DOOR (L.M.I.)

SAFTIFIRST
100 NORTH HILL DRIVE, SUITE 12
BRISBANE, CA. 94005-1010
TEL. (415) 230-6740 FAX. (415) 230-6741

revisions:			
no	date	by	description

date: 11-03-15
scale: 3/8" = 1"
dr. by: HAMID
chk. by:

drawing no.
W15-86

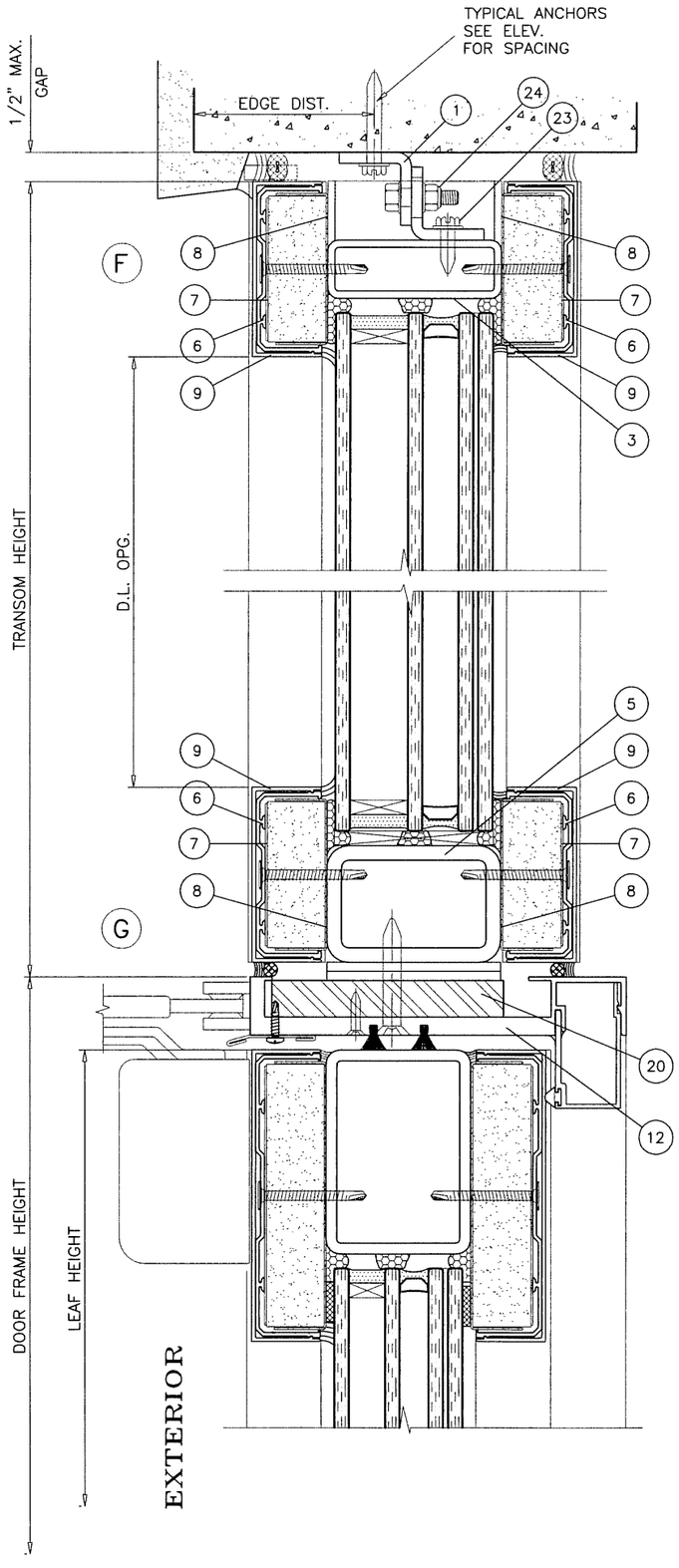

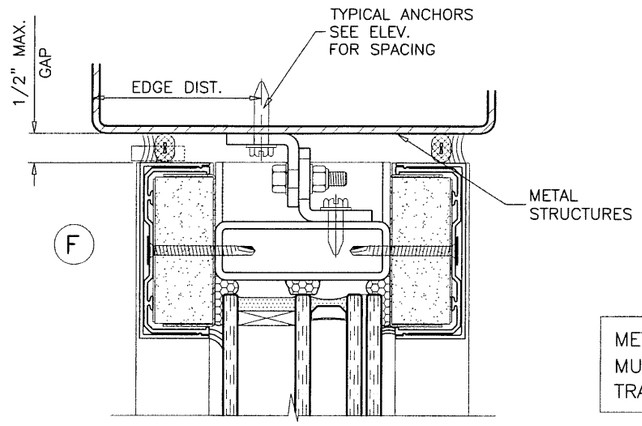

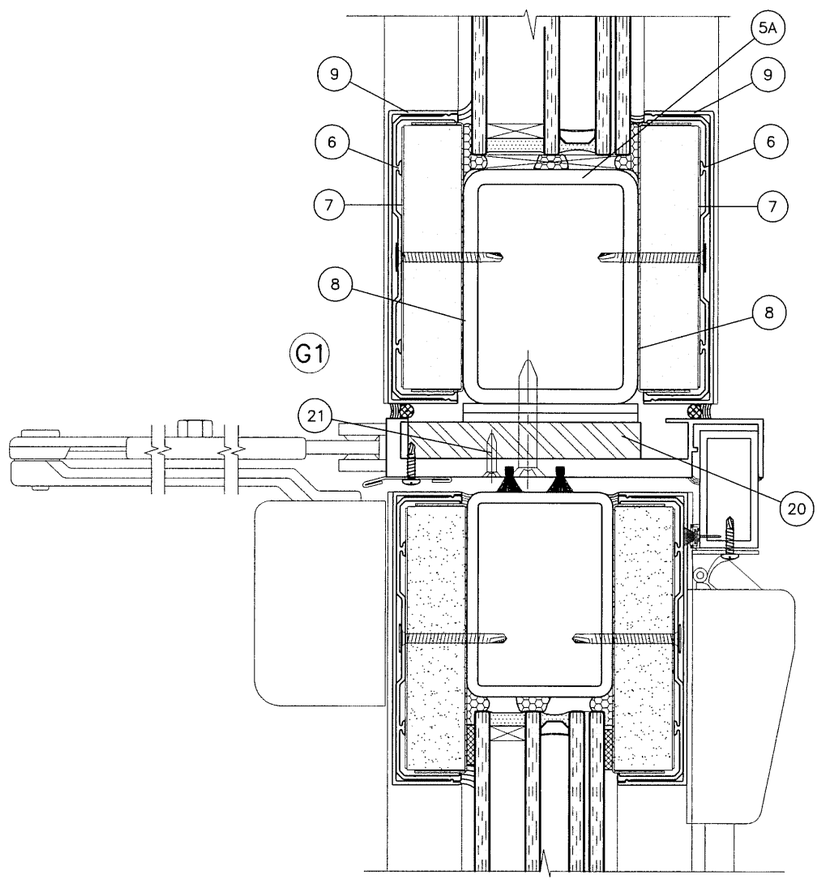

METAL STRUCTURES NOT BY SAFTIFIRST
MUST SUPPORT LOADS IMPOSED BY GLAZING SYSTEM AND TRANSFER THEM TO THE BUILDING STRUCTURE.

TYPICAL ANCHORS: SEE ELEV. FOR SPACING

AT TRANSOM

1/4" DIA ULTRACON BY 'ELCO' (Fu=177 KSI, Fy=155 KSI)

DIRECTLY INTO CONCRETE AND MASONRY
WITH 1-3/4" MIN. EMBED INTO CONC.
WITH 1-1/4" MIN. EMBED INTO MASONRY

ANCHOR EDGE DISTANCES

INTO CONCRETE = 2-1/2" MIN.

1/4" DIA. SELF DRILLING SCREWS (Fu=120 KSI, Fy=92 KSI)

INTO METAL STRUCTURES

STEEL : 1/8" THK. MIN. (Fy = 36 KSI MIN.)
ALUMINUM : 1/8" THK. MIN. (6063-T6 MIN.)
(STEEL IN CONTACT WITH ALUMINUM TO BE PLATED OR PAINTED)

ANCHOR EDGE DISTANCES

INTO METAL STRUCTURE = 1" MIN.

TRANSOM

Sealed 11/12/15

STATE OF TEXAS
JAVAD AHMAD
106516
LICENSED
PROFESSIONAL ENGINEER

AL-FAROOQ CORPORATION
ENGINEERS & PRODUCT DEVELOPMENT
1235 S.W. 87 AVE
MIAMI, FLORIDA 33174
TEL. (305) 264-8100 FAX. (305) 262-6978
COMP-ANL\W15-86SF

GPX FIRE RATED OUTSWING DOOR (L.M.I.)

SAFTIFIRST
100 NORTH HILL DRIVE, SUITE 12
BRISBANE, CA. 94005-1010
TEL. (415) 230-6740 FAX. (415) 230-6741

revisions:			
no	date	by	description

date: 11-03-15
scale: 3/8" = 1"
dr. by: HAMID
chk. by:

drawing no. W15-86

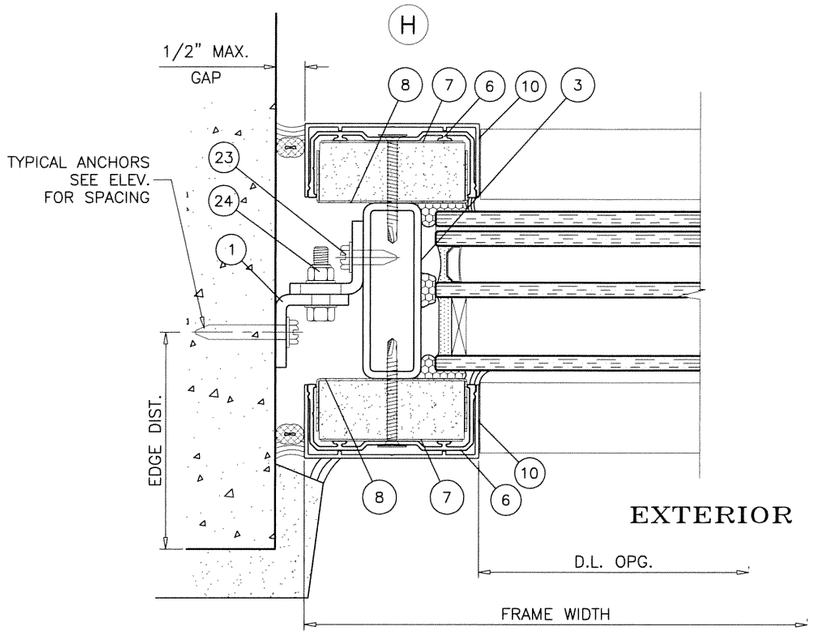

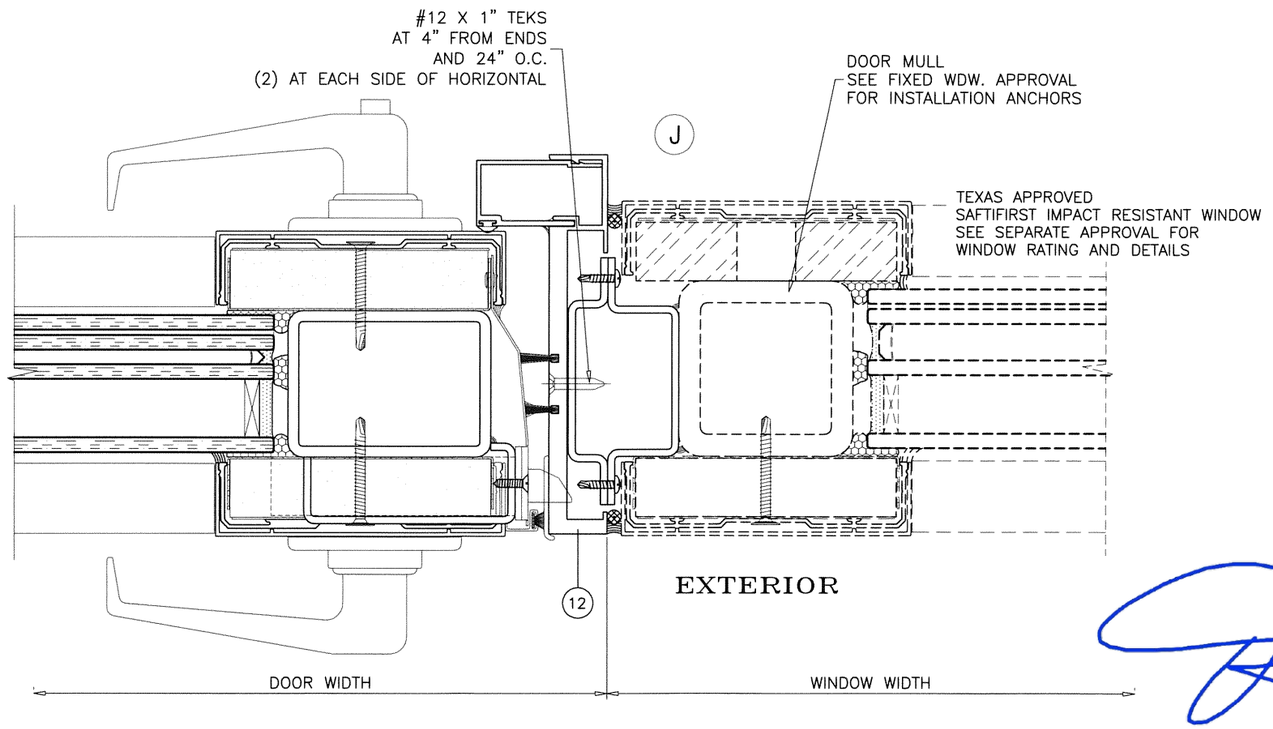

Sealed 11/12/15

STATE OF TEXAS
JAVAD AHMAD
106516
LICENSED PROFESSIONAL ENGINEER

AL-FAROOQ CORPORATION
ENGINEERS & PRODUCT DEVELOPMENT
1235 S.W. 87 AVE
MIAMI, FLORIDA 33174
TEL. (305) 264-8100 FAX. (305) 262-6978
COMP-ANL\W15-86SF

GPX FIRE RATED OUTSWING DOOR (L.M.I.)

SAFTIFIRST
100 NORTH HILL DRIVE, SUITE 12
BRISBANE, CA. 94005-1010
TEL. (415) 230-6740 FAX. (415) 230-6741

revisions:			
no	date	by	description

date: 11-03-15
scale: 3/8" = 1"
dr. by: HAMID
chk. by:

drawing no.
W15-86

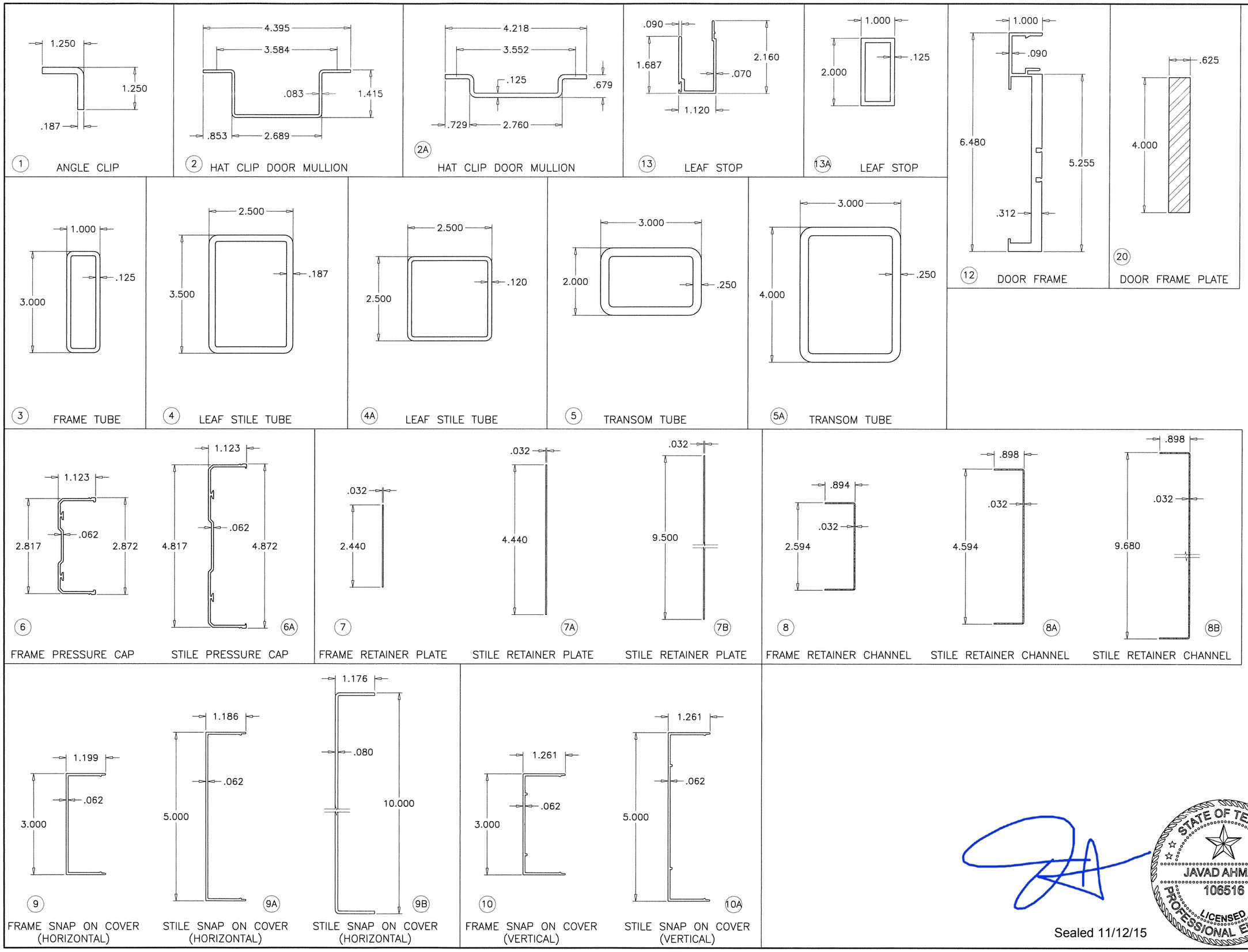

Sealed 11/12/15

STATE OF TEXAS
JAVAD AHMAD
106516
LICENSED PROFESSIONAL ENGINEER

AL-FAROOQ CORPORATION
ENGINEERS & PRODUCT DEVELOPMENT
1235 S.W. 87 AVE
MIAMI, FLORIDA 33174
TEL. (305) 264-8100 FAX. (305) 262-6978

COMP-ANL\W15-86SF

GPX FIRE RATED OUTSWING DOOR (L.M.I.)

SAFTIFIRST
100 NORTH HILL DRIVE, SUITE 12
BRISBANE, CA. 94005-1010
TEL. (415) 230-6740 FAX. (415) 230-6741

revisions:

no	date	by	description

date: 11-03-15
scale: 3/8" = 1"
dr. by: HAMID
chk. by:

drawing no.
W15-86

sheet 8 of 9

ITEM NO.	QUANTITY	DESCRIPTION	MATERIAL	MANF./SUPPLIER/REMARKS
1	AS REQD.	ANGLE CLIP, 2" LONG	A36 STEEL	A60 JET–COAT ASTM A–653
2	AS REQD.	HAT CLIP, 2" LONG	A36 STEEL	A60 JET–COAT ASTM A–653
2A	AS REQD.	HAT CLIP, 2" LONG	A36 STEEL	A60 JET–COAT ASTM A–653
3	4/ WDW.	FRAME TUBE	STEEL	ASTM A–513
4	AS REQD.	LEAF STILE TUBE	STEEL	ASTM A–513
4A	AS REQD.	LEAF STILE TUBE	STEEL	ASTM A–513
5	AS REQD.	TRANSOM TUBE	STEEL	ASTM A–513
6	8/ WDW.	FRAME PRESSURE CAP	6063–T5	–
6A	AS REQD.	STILE PRESSURE CAP	6063–T5	–
7	8/ WDW.	FRAME RETAINER PLATE	STEEL	A60 JET–COAT ASTM A–653
7A	AS REQD.	STILE RETAINER PLATE	STEEL	A60 JET–COAT ASTM A–653
7B	AS REQD.	STILE RETAINER PLATE	STEEL	A60 JET–COAT ASTM A–653
8	8/ WDW.	FRAME RETAINER CHANNEL	STEEL	A60 JET–COAT ASTM A–653
8A	AS REQD.	STILE RETAINER CHANNEL	STEEL	A60 JET–COAT ASTM A–653
8B	AS REQD.	STILE RETAINER CHANNEL	STEEL	A60 JET–COAT ASTM A–653
9	8/ WDW.	FRAME SNAP ON COVER HORIZONTAL	6063–T5	–
9A	AS REQD.	STILE SNAP ON COVER HORIZONTAL	6063–T5	–
9B	AS REQD.	STILE SNAP ON COVER HORIZONTAL	6063–T5	–
10	8/ WDW.	FRAME SNAP ON COVER VERTICAL	6063–T5	–
10A	AS REQD.	STILE SNAP ON COVER VERTICAL	6063–T5	–
11	2/ LITE	SETTING BLOCK, 1/4" X 1–3/8" X 3" LONG	EPDM	DUROMETER 80±5 SHORE A
12	4	DOOR FRAME	6063–T5	–
13	4	LEAF STOP	6063–T5	–
13A	4	LEAF STOP	6063–T5	–
14	AS REQD.	POLYPILE W'STRIPPING, .30" HIGH	–	PEMKO
15	AS REQD.	BULB W'STRIPPING	VINYL	PEMKO
16	#355A	BULB W'STRIPPING	VINYL	–
17	369	POLYPILE W'STRIPPING, .60" HIGH	–	PEMKO
18	351PK	MEETING RAIL SEAL	SILICONE	–
19	#919	CONT. HINGE	ST/ST	–
20	–	DOOR FRAME PLATE	STEEL	A36, Fu MIN. = 58 KSI
21	#10 X 3/4"	PLATE FASTENERS, AT 4" FROM ENDS & 24" O.C.	STEEL	FH SMS
22	#10 X 1–3/4"	ASSEMBLY FASTENERS AT 4" FROM ENDS & 12" O.C.	STEEL	FLAT HEAD TEKS
23	#12 X 1"	CLIP ANGLE TO FRAME FASTENER	STEEL	HH TEKS
24	1/4–20 X 1–1/4"	CLIP ANGLE TO ANGLE FASTENER	STEEL	HH BOLT W/ NUT AND WASHER

ALL WELDS PER AWS.
ELECTRODE = ER70 MIN.

LOCK OPTIONS:

OPTION #1:

ACTIVE LEAF:

LEVER LOCK SET SERIES 8200 BY 'SARGENT'
AT 40" FROM BOTTOM

INACTIVE LEAF:

MANUALLY OPERATED FLUSH BOLTS AT 12" FROM
TOP AND BOTTOM.

OPTION #2:

ACTIVE & INACTIVE LEAF:

VERTICAL ROD PANIC EXIT DEVICE SERIES 9827–F BY
'VON DUPRIN' LOCATED AT 40" FROM SILL AT EACH LEAF.

HINGES:

CONTINUOUS STAINLESS STEEL HINGE SYSTEM (ZERO#919)
FASTENED WITH #12–24 X 3/8" FH MS
(20) SCREWS AT HINGE STILE
(20) SCREWS AT FRAME JAMB
SPACED AT 1–1/2" FROM ENDS
AND 6" O.C. IN STAGGERED HOLES

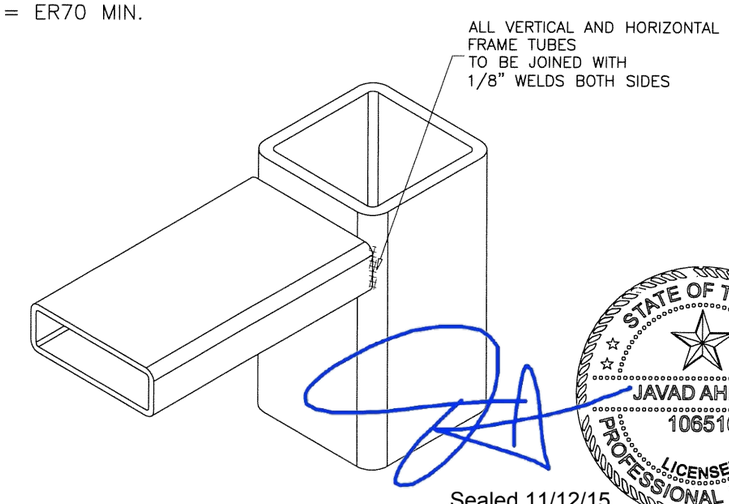

STATE OF TEXAS
JAVAD AHMAD
106516
LICENSED
PROFESSIONAL ENGINEER

Sealed 11/12/15

afc
AL-FAROOQ CORPORATION
ENGINEERS & PRODUCT DEVELOPMENT
1235 S.W. 87 AVE
MIAMI, FLORIDA 33174
TEL. (305) 264-8100 FAX. (305) 262-6978

COMP–ANL\W15–86SF

GPX FIRE RATED OUTSWING DOOR (L.M.I.)

SAFTIFIRST
100 NORTH HILL DRIVE, SUITE 12
BRISBANE, CA. 94005–1010
TEL. (415) 230–6740 FAX. (415) 230–6741

revisions:			
no	date	by	description

date: 11–03–15
scale: 3/8" = 1"
dr. by: HAMID
chk. by:

drawing no.
W15–86