TAYLOR Entrance Systems™

AMERICA'S DOORMAKER

631 N. FIRST ST. WEST BRANCH, MI 48661

OPAQUE STEEL DOORS DOUBLES w/ or w/o SIDELITES

INSWING / OUTSWING "NON-IMPACT"

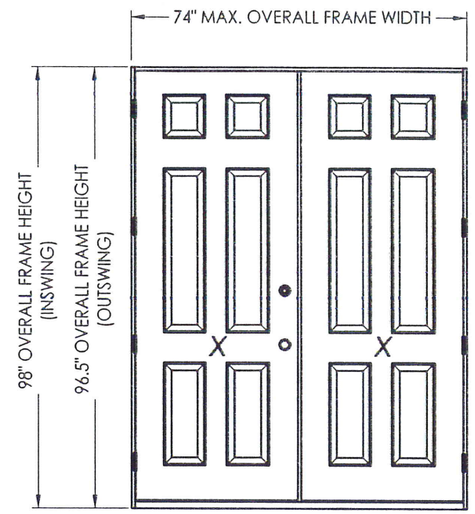

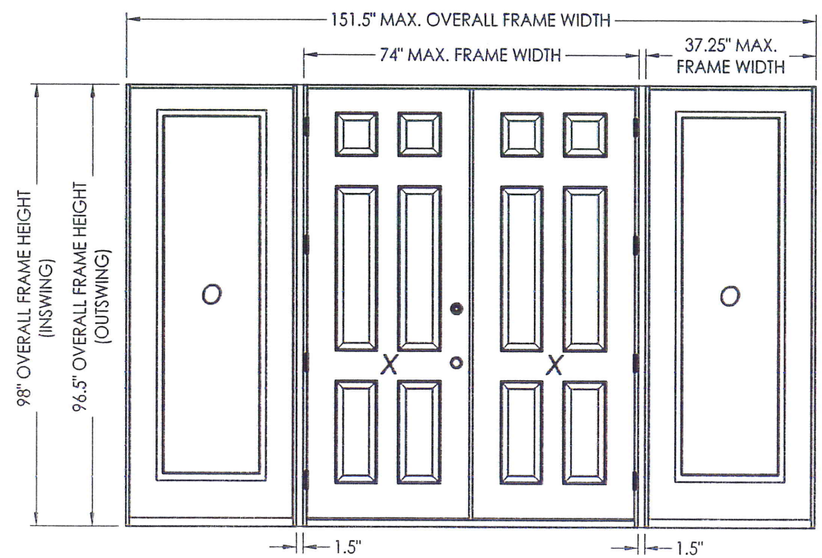

EVALUATED FOR USE IN THE STATE OF TEXAS

The Steel Door described herein complies with the 2006 International Residential Code (IRC), Sections R301 & R613 and the 2006 International Building Code (IBC), Sections 1405.12, 1609, 1714.5, 2403 and 2404 (including Texas revisions) subject to the following conditions:

1. Anchors shall be as listed and spaced as shown in the details. Anchor embedment to base material shall be beyond wall dressing or stucco.
2. When used in areas requiring wind-borne debris protection this product is required to be protected with an impact resistant covering that complies with Section R301.2.1.2 of the IRC and Section 1609.1.2 of the IBC.
3. Allowable design pressure requirements must be equal to or less than the design pressure rating shown in the design pressure chart, sheet 1 of this drawing.
4. Conditions not covered by this drawing are subject to further engineering analysis.

TABLE OF CONTENTS

SHEET#	DESCRIPTION
1	Typical elevations, design pressures & general notes
2	Door panel details
3	Sidelite panel details
4	Elevations
5	Vertical cross sections
6	Horizontal cross sections
7	Hardware details
8	Frame anchoring
9	Bill of materials and components

CONFIG.	MAX. FRAME DIMENSION	DESIGN PRESSURE (PSF) INSWING		DESIGN PRESSURE (PSF) OUTSWING	
		POS.	NEG.	POS.	NEG.
XX	74.0" x 98.0"	+40.0	-45.0	+40.0	-40.0
OXXO	151.5" x 98.0"				

11-12-14

Documents Prepared By: Lyndon F. Schmidt, P.E. TEXAS P.E. #104123

RW BUILDING CONSULTANTS, INC. P.O. Box 230 Valrico FL. 33595 Phone No.: 813.659.9197

TEXAS BOARD OF PROFESSIONAL ENGINEERS CERTIFICATE OF REGISTRATION # F-11852

PRODUCT: TAYLOR DOOR STEEL DOOR

PART OR ASSEMBLY: TYPICAL ELEVATION, DESIGN PRESSURES & GENERAL NOTES

REVISIONS

NO.	DATE	BY

DATE: 11/3/14

SCALE: N.T.S.

DWG. BY: JK

CHK. BY: LFS

DRAWING NO.: TX-4502

SHEET 1 OF 9

© 2014 R.W. BUILDING CONSULTANTS INC.

R:\Clients\Taylor Permanent\TX-4499-4502.dwg, TX-4502

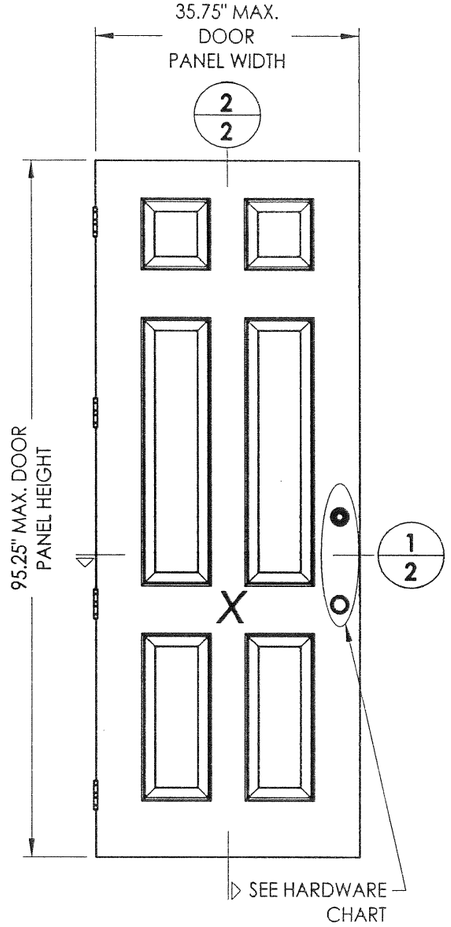

40 STEEL EDGE DOOR PANEL

DOOR SKIN: 0.022" MIN. THK. STEEL
CORE MATERIAL: POLYURETHANE FOAM

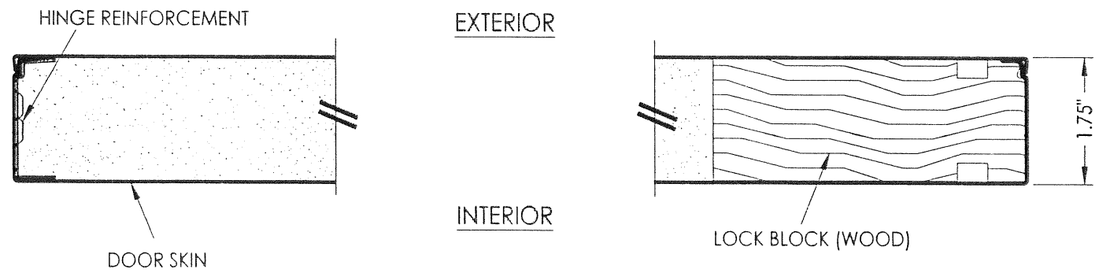

1/2 HORIZONTAL CROSS SECTION

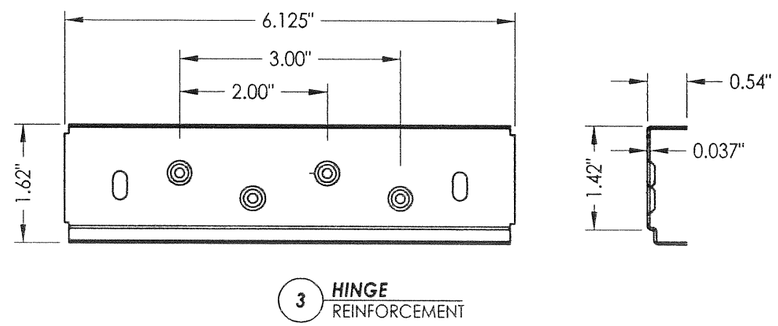

3 HINGE REINFORCEMENT

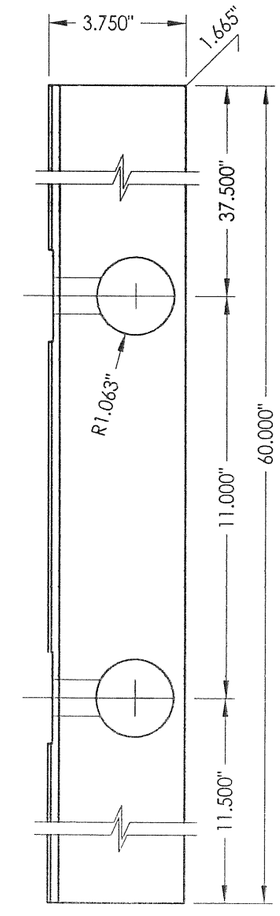

4 LOCK BLOCK DETAIL

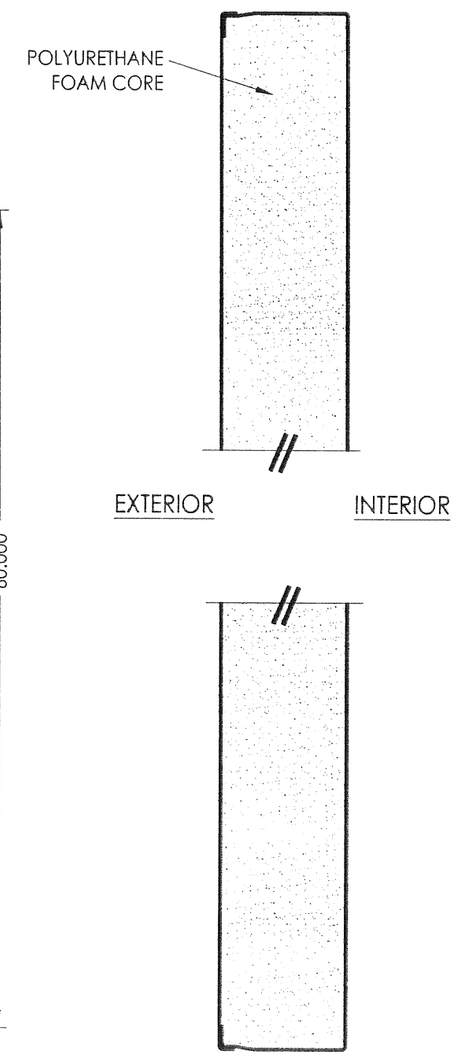

2/2 VERTICAL CROSS SECTION

HARDWARE CHART	
MANUFACTURER	MODEL
YALE	KNOB: NEW TRADITIONS DEADBOLT: NEW TRADITIONS (800 SERIES)
SCHLAGE	KNOB/LEVER: "F" SERIES DEADBOLT: B60/62

11-12-14

Documents Prepared By: Lyndon F. Schmidt, P.E.
TEXAS P.E. #104123

RW BUILDING CONSULTANTS, INC.
P.O. Box 230 Valrico FL. 33595
Phone No.: 813.659.9197

TEXAS BOARD OF PROFESSIONAL ENGINEERS
CERTIFICATE OF REGISTRATION # F-11852

PRODUCT: TAYLOR DOOR STEEL DOOR

PART OR ASSEMBLY: DOOR PANEL DETAILS

NO.	DATE	REVISIONS	BY

DATE: 11/3/14
SCALE: N.T.S.
DWG. BY: JK
CHK. BY: LFS
DRAWING NO.: TX-4502
SHEET 2 OF 9

© 2014 R.W. BUILDING CONSULTANTS INC.

R:\Clients\Taylor Permanent\TX-4499-4502.dwg, 2.4

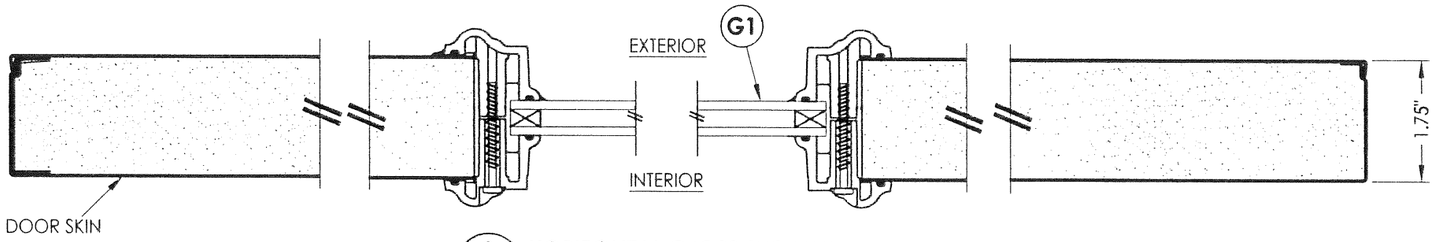

1/2 HORIZONTAL CROSS SECTION

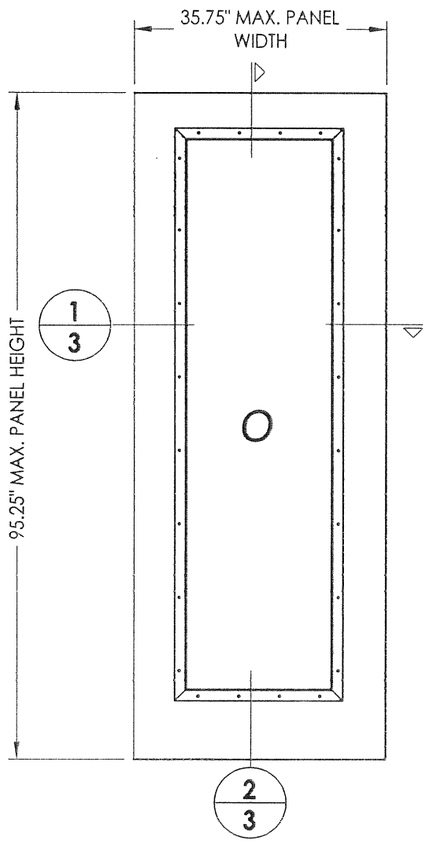

50 TAYLOR DOOR SIDELITE PANEL

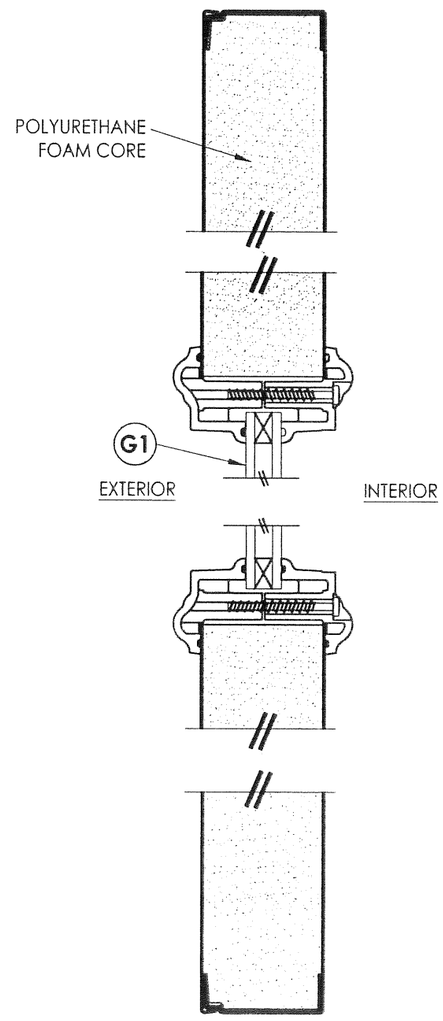

2/2 VERTICAL CROSS SECTION

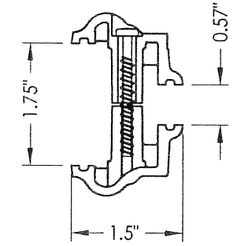

2A ODL LITE FRAME
HP Polypropylene

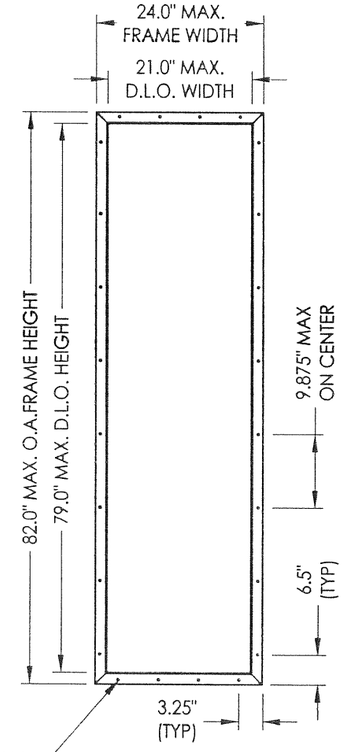

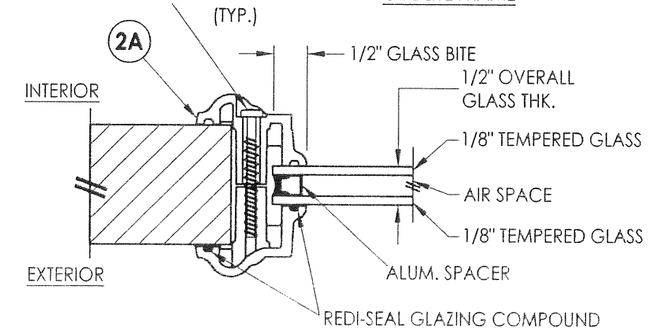

G1 GLAZING DETAIL

DOOR SKIN: 0.022" MIN. THK. STEEL
CORE MATERIAL: POLYURETHANE FOAM

Documents Prepared By: Lyndon F. Schmidt, P.E. TEXAS P.E. #104123
RW BUILDING CONSULTANTS, INC.
P.O. Box 230 Valrico FL. 33595
Phone No.: 813.659.9197
TEXAS BOARD OF PROFESSIONAL ENGINEERS CERTIFICATE OF REGISTRATION # F-11852

PRODUCT: TAYLOR DOOR STEEL DOOR

PART OR ASSEMBLY: DOOR & SIDELITE PANEL DETAILS

NO.	DATE	REVISIONS	BY

DATE: 11/3/14
SCALE: N.T.S.
DWG. BY: JK
CHK. BY: LFS
DRAWING NO.: TX-4502
SHEET 3 OF 9

© 2014 R.W. BUILDING CONSULTANTS INC.

R:\Clients\Taylor Permanent\TX-4499-4502.dwg, 3.4

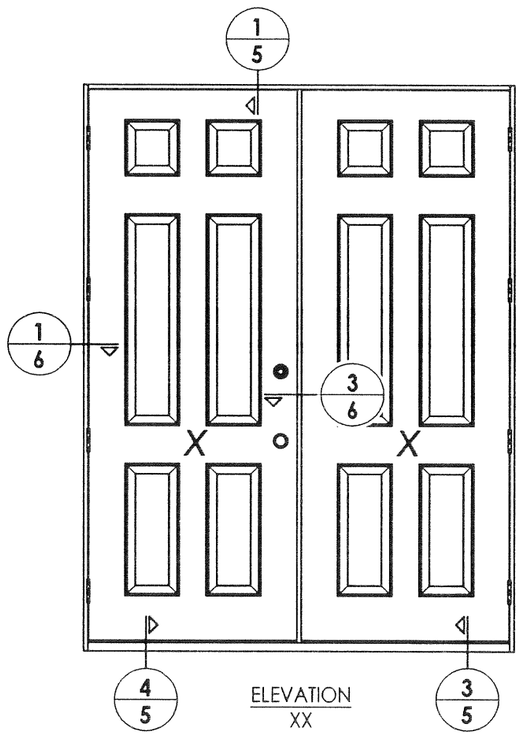

ELEVATION
XX

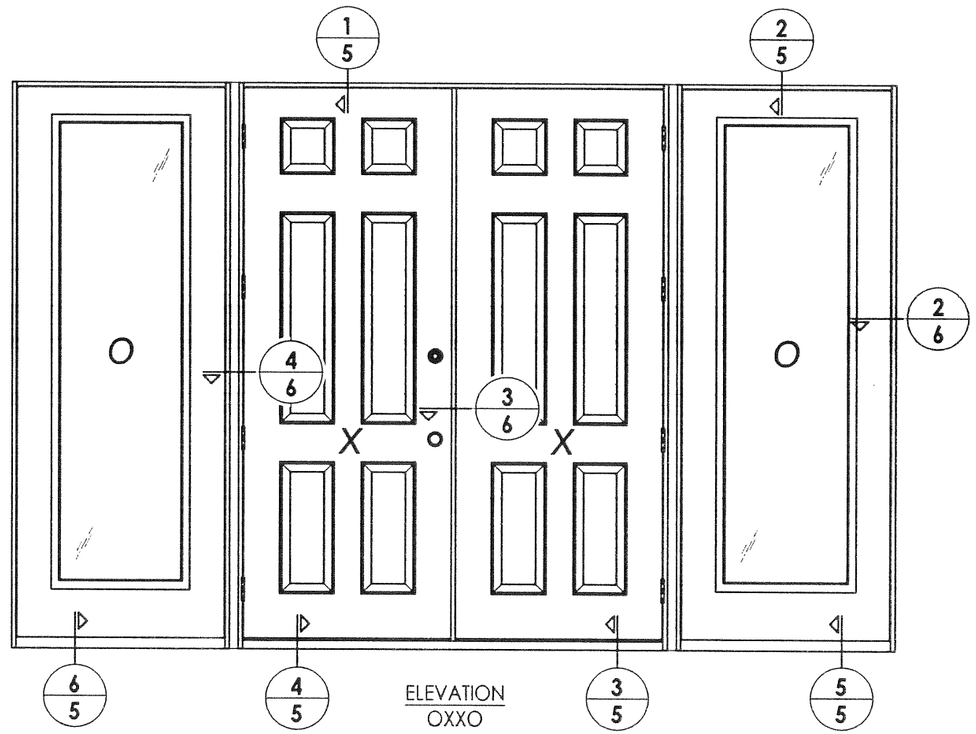

ELEVATION
OXXO

11-12-14

Documents Prepared By: Lyndon F. Schmidt, P.E.
TEXAS P.E. #104123

RW BUILDING CONSULTANTS, INC.
P.O. Box 230 Valrico FL. 33595
Phone No.: 813.659.9197

TEXAS BOARD OF PROFESSIONAL ENGINEERS
CERTIFICATE OF REGISTRATION # F-11852

PRODUCT: TAYLOR DOOR STEEL DOOR

PART OR ASSEMBLY: ELEVATIONS

NO.	DATE	REVISIONS	BY

DATE: 11/3/14
SCALE: N.T.S.
DWG. BY: JK
CHK. BY: LFS
DRAWING NO.: TX-4502
SHEET 4 OF 9

© 2014 R.W. BUILDING CONSULTANTS INC.

R:\Clients\Taylor Permanent\TX-4499-4502.dwg, 4.4

NOTE:
1. Spacing for item F or K @ head & sill: 6" from each end plus 1 @ centerline (3 total).

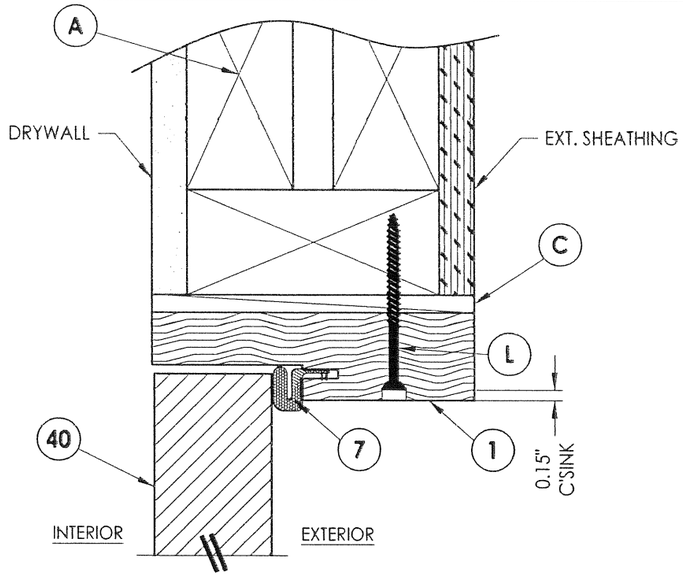

1/5 **VERTICAL CROSS SECTION**
Inswing shown (Outswing similar)

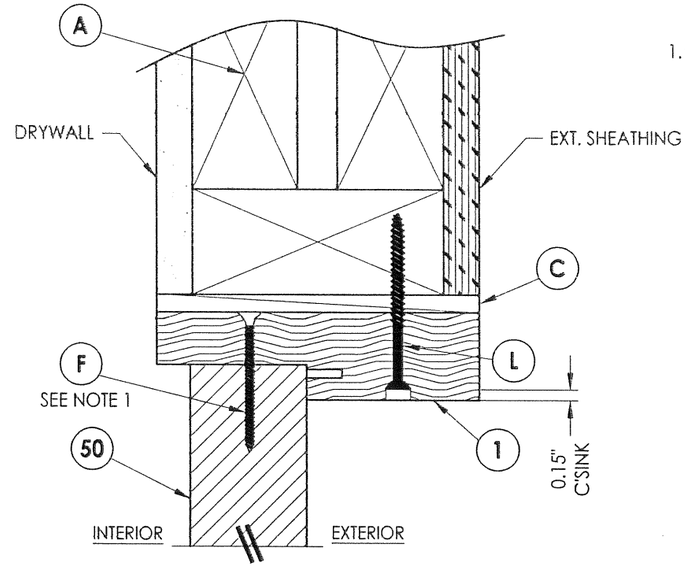

2/5 **VERTICAL CROSS SECTION**
Inswing shown (Outswing similar)

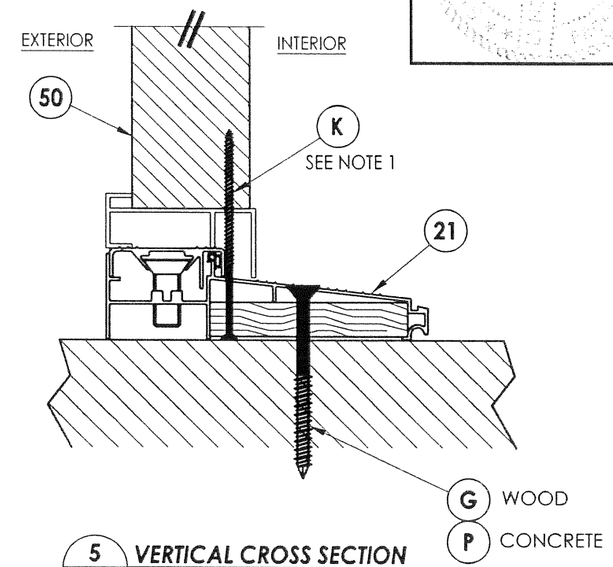

5/5 **VERTICAL CROSS SECTION**
Inswing sill

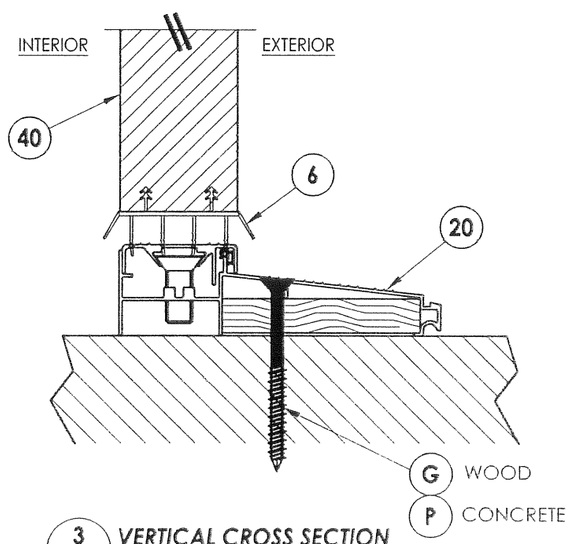

3/5 **VERTICAL CROSS SECTION**
Inswing sill

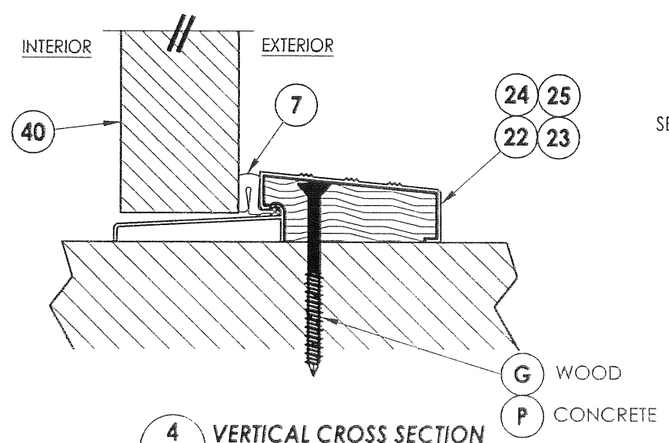

4/5 **VERTICAL CROSS SECTION**
Outswing sill

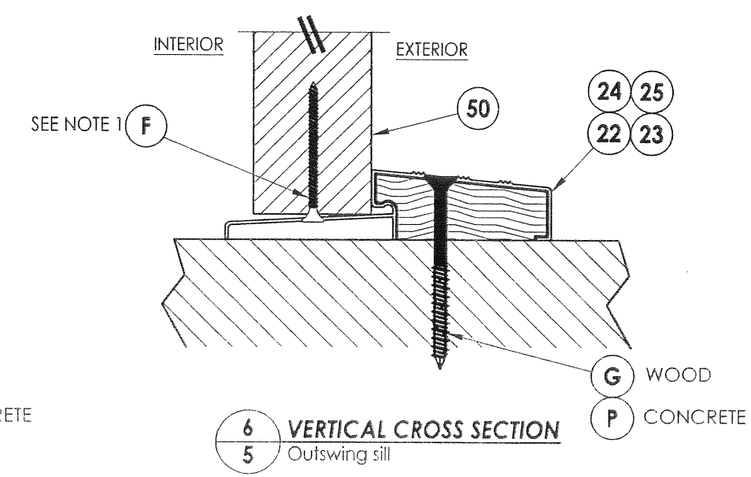

6/5 **VERTICAL CROSS SECTION**
Outswing sill

Documents Prepared By: Lyndon F. Schmidt, P.E. TEXAS P.E. #104123
R.W. BUILDING CONSULTANTS, INC.
P.O. Box 230 Valrico FL. 33595
Phone No.: 813.659.9197
TEXAS BOARD OF PROFESSIONAL ENGINEERS CERTIFICATE OF REGISTRATION # F-11852

PRODUCT: TAYLOR DOOR STEEL DOOR

PART OR ASSEMBLY: VERTICAL CROSS SECTIONS

NO.	DATE	REVISIONS	BY

DATE: 11/3/14
SCALE: N.T.S.
DWG. BY: JK
CHK. BY: LFS
DRAWING NO.: TX-4502
SHEET 5 OF 9

© 2014 R.W. BUILDING CONSULTANTS INC.

R:\Clients\Taylor Permanent\TX-4499-4502.dwg, 5.4

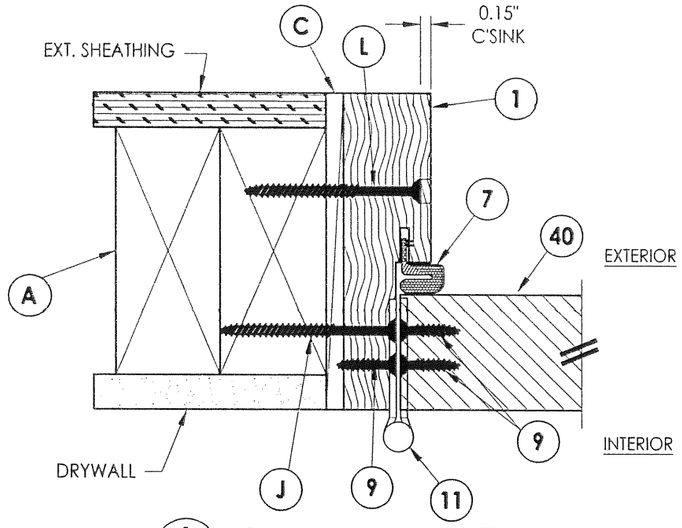

1/6 **HORIZONTAL CROSS SECTION**
Inswing shown (Outswing similar)

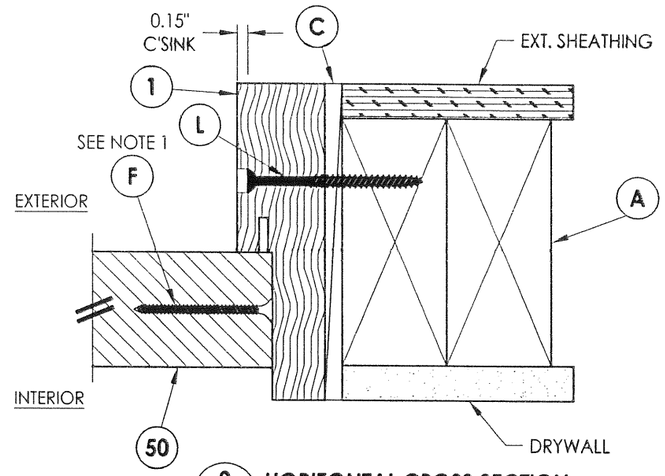

2/6 **HORIZONTAL CROSS SECTION**
Inswing shown (Outswing similar)

NOTE:
1. Spacing for item F: 6" from each end and 6 more equally spaced along sidelite jamb (8 total).

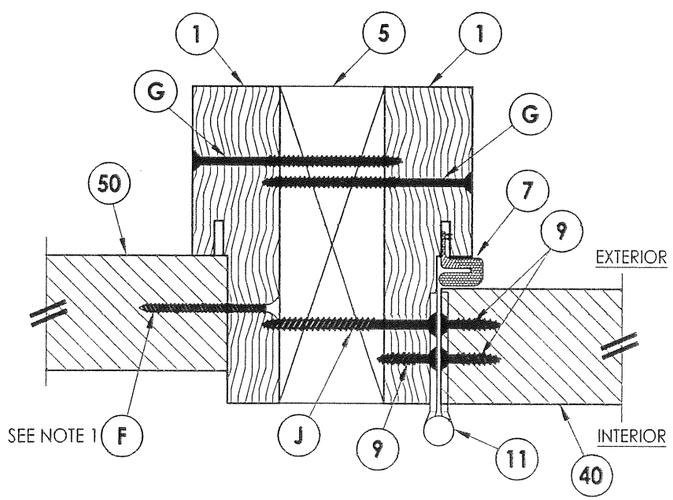

4/6 **HORIZONTAL CROSS SECTION**
Inswing shown (Outswing similar)

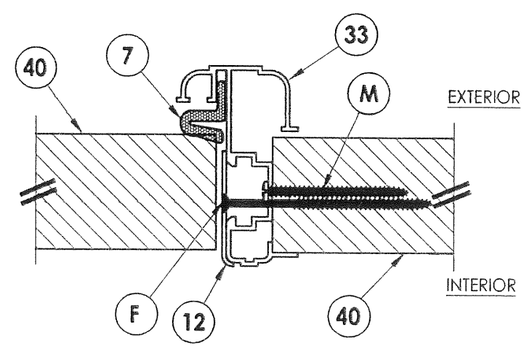

3/6 **HORIZONTAL CROSS SECTION**
Inswing shown (Outswing similar)

Documents Prepared By: Lyndon F. Schmidt, P.E.
TEXAS P.E. #104123

RW BUILDING CONSULTANTS, INC.
P.O. Box 230 Valrico FL 33595
Phone No.: 813.659.9197

TEXAS BOARD OF PROFESSIONAL ENGINEERS
CERTIFICATE OF REGISTRATION # F-11852

PRODUCT: TAYLOR DOOR STEEL DOOR

PART OR ASSEMBLY: HORIZONTAL CROSS SECTIONS

NO.	DATE	REVISIONS	BY

DATE: 11/3/14
SCALE: N.T.S.
DWG. BY: JK
CHK. BY: LFS
DRAWING NO.: TX-4502
SHEET 6 OF 9

© 2014 R.W. BUILDING CONSULTANTS INC.

R:\Clients\Taylor Permanent\TX-4499-4502.dwg, 6.4

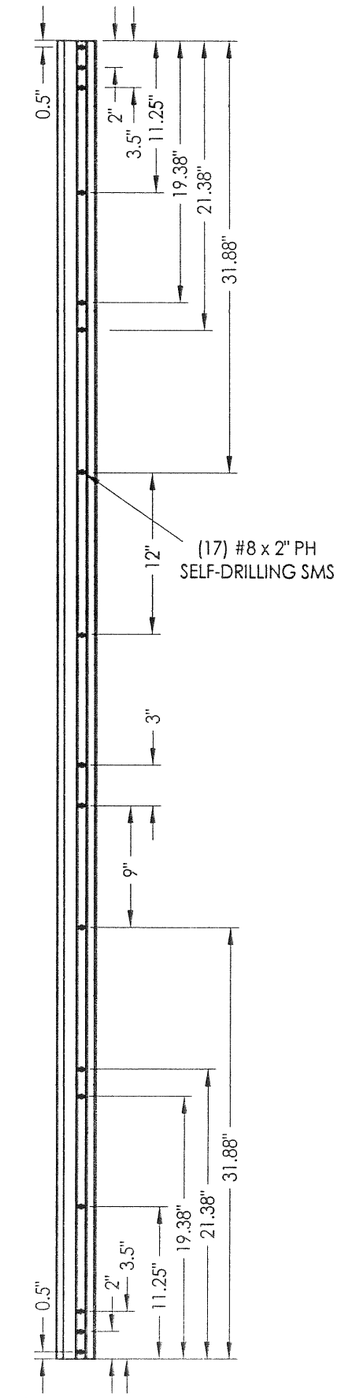

ASTRAGAL SCREW LOCATIONS

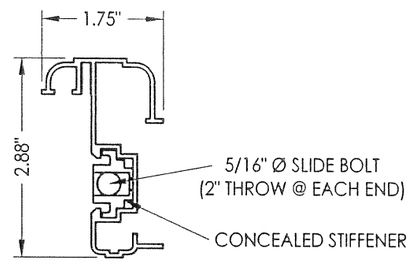

33 ASTRAGAL
DLP

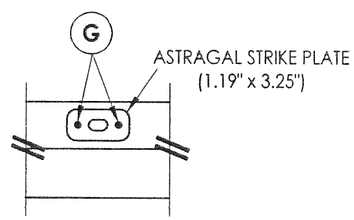

ASTRAGAL BOLT DETAIL
Strike Plate @ Head

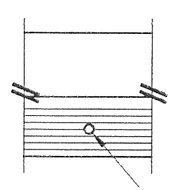

ASTRAGAL BOLT DETAIL
Outswing Threshold

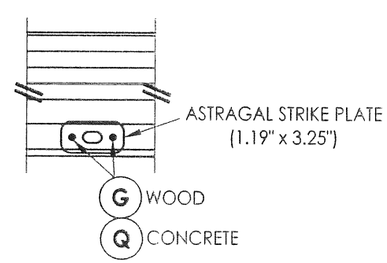

ASTRAGAL BOLT DETAIL
Inswing Threshold

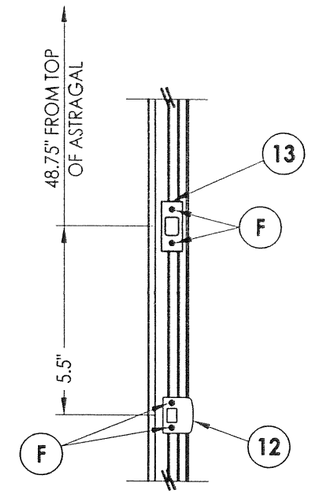

LATCH AND DEADBOLT DETAILS

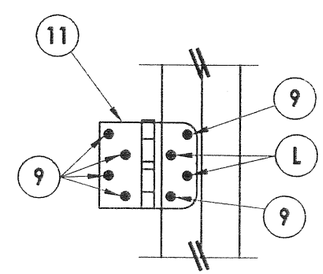

HINGE DETAIL

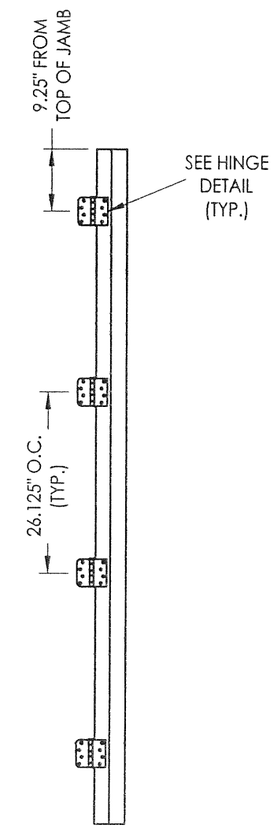

HINGE JAMB

Documents Prepared By: Lyndon F. Schmidt, P.E.
TEXAS P.E. #104123

RW BUILDING CONSULTANTS, INC.
P.O. Box 230 Valrico FL. 33595
Phone No.: 813.659.9197

TEXAS BOARD OF PROFESSIONAL ENGINEERS
CERTIFICATE OF REGISTRATION # F-11852

PRODUCT: TAYLOR DOOR STEEL DOOR

PART OR ASSEMBLY: HARDWARE DETAILS

NO.	DATE	REVISIONS	BY

DATE: 11/3/14
SCALE: N.T.S.
DWG. BY: JK
CHK. BY: LFS
DRAWING NO.: TX-4502
SHEET 7 OF 9

© 2014 R.W. BUILDING CONSULTANTS INC.

R:\Clients\Taylor Permanent\TX-4499-4502.dwg, 7.4

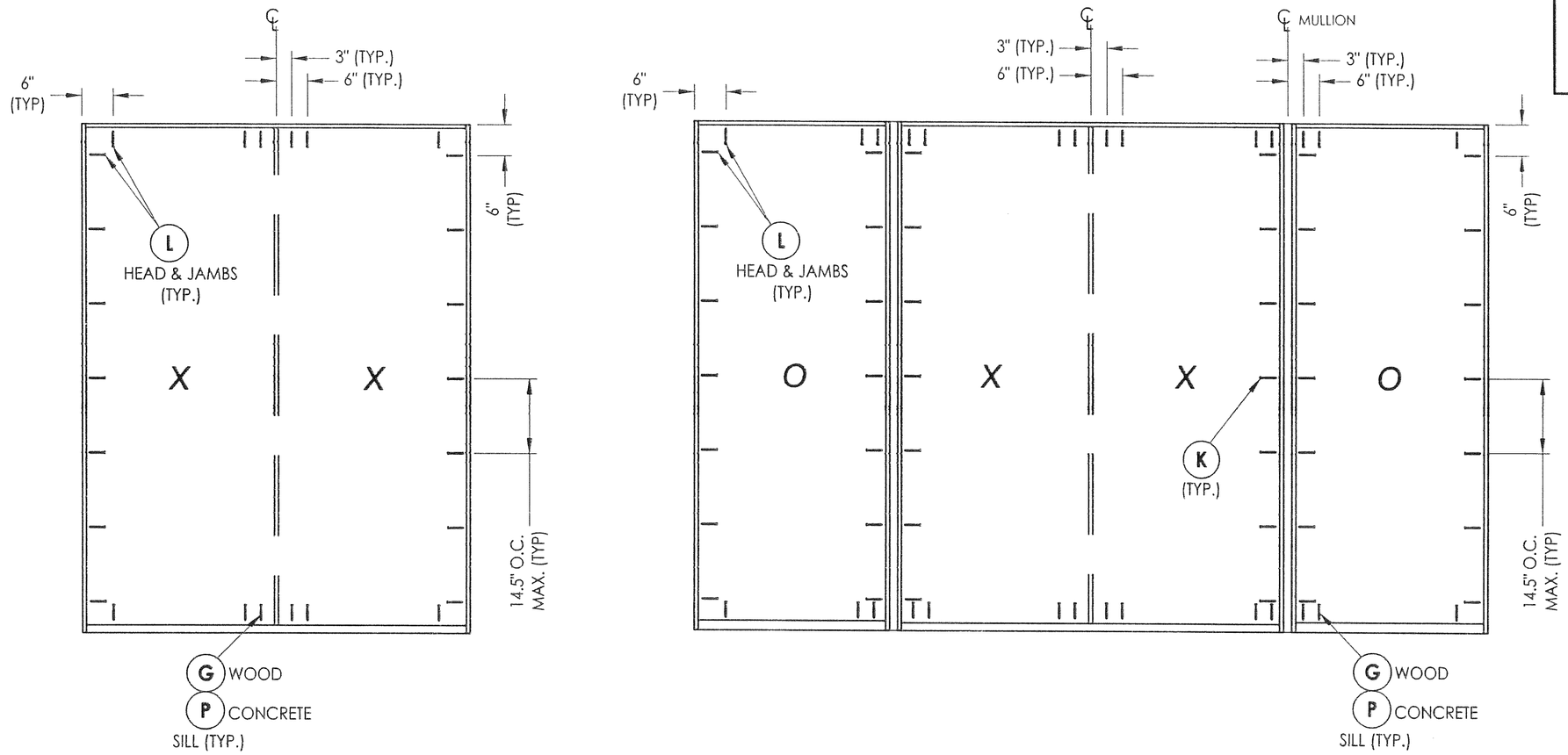

FRAME ANCHORING
2X stud framing
w/ wood/concrete substrate

Documents Prepared By: Lyndon F. Schmidt, P.E.
TEXAS P.E. #104123

R.W. BUILDING CONSULTANTS, INC.
P.O. Box 230 Valrico FL. 33595
Phone No.: 813.659.9197

TEXAS BOARD OF PROFESSIONAL ENGINEERS
CERTIFICATE OF REGISTRATION # F-11852

11.12.14

PRODUCT: TAYLOR DOOR STEEL DOOR

PART OR ASSEMBLY: FRAME ANCHORING

NO.	DATE	BY

REVISIONS

DATE: 11/3/14
SCALE: N.T.S.
DWG. BY: JK
CHK. BY: LFS
DRAWING NO.: TX-4502
SHEET 8 OF 9

© 2014 R.W. BUILDING CONSULTANTS INC.

R:\Clients\Taylor Permanent\TX-4499-4502.dwg, 8.4

BILL OF MATERIALS

ITEM #	DESCRIPTION	MATERIAL
A	2X FRAMING (SG >= 0.42)	WOOD
C	1/4" MAX. SHIM SPACE	-
F	#7 X 2" PFH DRYWALL SCREW	STEEL
G	#10 X 3" PFH WOOD SCREW (1-1/2" MIN. EMB.)	STEEL
J	#10 X 2-1/2" PFH WOOD SCREW	STEEL
K	#6 X 3" PFH WOOD SCREW	STEEL
L	#10 X 2-1/2" PFH WOOD SCREW (1.15" MIN. EMB.)	STEEL
M	#8 X 2" PH SMS	STEEL
P	1/4" PFH CONCRETE SCREW (1-3/4" MIN. EMB.)	STEEL
Q	3/16" PFH CONCRETE SCREW (1-3/4" MIN. EMB.)	STEEL
1	WOOD JAMB (FINGER-JOINT PINE)	WOOD
5	2X MULLION (SG >= 0.55)	WOOD
6	SWEEP	PVC
7	WEATHERSTRIP	FOAM
9	#10 x 3/4" PFH WOOD SCREW	STEEL
11	4" X 4" HINGE	STEEL
12	LATCH STRIKE PLATE	STEEL
13	DEADBOLT STRIKE PLATE	STEEL
20	INSWING THRESHOLD	ALUM/WOOD
21	INSWING THRESHOLD w/ SIDELITE ADAPTER	ALUM/WOOD
22	OUTSWING THRESHOLD	ALUM/WOOD
23	OUTSWING THRESHOLD	ALUM/WOOD
24	OUTSWING THRESHOLD	ALUM/WOOD
25	OUTSWING THRESHOLD	ALUM
33	ASTRAGAL (DLP)	ALUM
40	DOOR PANEL	-
50	SIDELITE PANEL	-

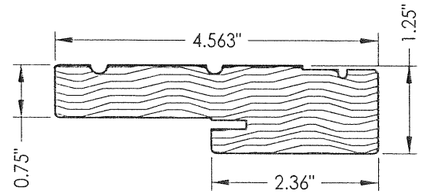

1 WOOD JAMB

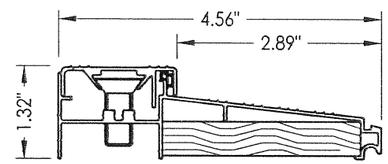

20 INSWING THRESHOLD
DLP

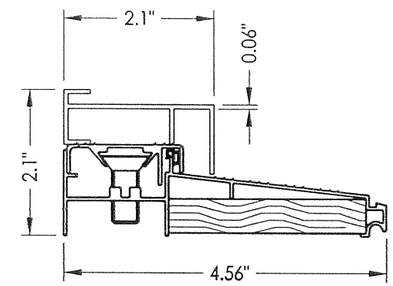

21 INSWING THRESHOLD w/ SIDELITE ADAPTER
DLP

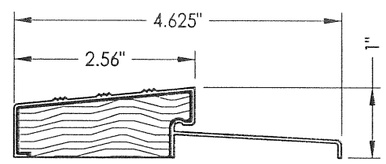

22 OUTSWING THRESHOLD
DLP (QOS)

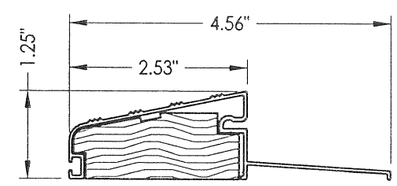

23 OUTSWING THRESHOLD
DLP (QOSH)

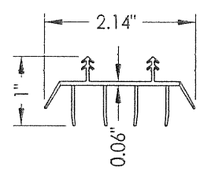

6 SWEEP

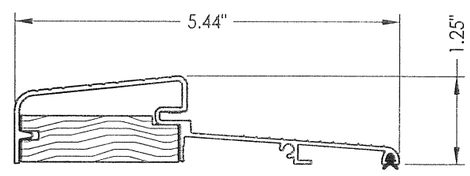

24 OUTSWING THRESHOLD
Combo

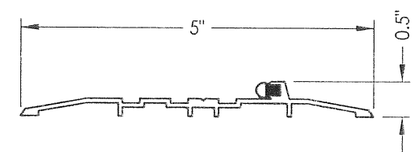

25 OUTSWING THRESHOLD
DLP (OSHC)

CONCRETE ANCHOR NOTES:

1. Concrete anchor locations at the corners may be adjusted to maintain the min. edge distance to mortar joints.
2. Concrete anchor locations noted as "MAX. ON CENTER" must be adjusted to maintain the min. edge distance to mortar joints, additional concrete anchors may be required to ensure the "MAX. ON CENTER" dimension are not exceeded.
3. Concrete anchor table:

ANCHOR TYPE	ANCHOR SIZE	MIN. EMBEDMENT	MIN. CLEARANCE TO MASONRY EDGE	MIN. CLEARANCE TO ADJACENT ANCHOR
ITW TAPCON®	3/16"	1-3/4"	3"	1-1/2"
	1/4"	1-3/4"	1-1/2"	4"
ELCO ULTRACON®	1/4"	1-3/4"	1"	4"

11.12.14

Documents Prepared By: Lyndon F. Schmidt, P.E.
TEXAS P.E. #104123
RW BUILDING CONSULTANTS, INC.
P.O. Box 230 Valrico FL. 33595
Phone No.: 813.659.9197
TEXAS BOARD OF PROFESSIONAL ENGINEERS
CERTIFICATE OF REGISTRATION # F-11852

PRODUCT: TAYLOR DOOR STEEL DOOR

PART OR ASSEMBLY: BILL OF MATERIALS & COMPONENTS

NO.	DATE	REVISIONS	BY

DATE: 11/3/14
SCALE: N.T.S.
DWG. BY: JK
CHK. BY: LFS
DRAWING NO.: TX-4502
SHEET 9 OF 9

© 2014 R.W. BUILDING CONSULTANTS INC.

R:\Clients\Taylor Permanent\TX-4499-4502.dwg, 9.4