Endura PRODUCTS, INC.

8811 West Market Street
Colfax, NC 27235

Glazed Fiberglass Door

"NON-IMPACT"
INSWING / OUTSWING

EVALUATED FOR USE IN THE STATE OF TEXAS

The Glazed Fiberglass Door system described herein complies with the 2006 International Residential Code (IRC), Sections R301 & R613 and the 2006 International Building Code (IBC), Sections 1405.12, 1609, 1714.5, 2403 and 2404 (including Texas revisions) subject to the following conditions:

1. Anchors shall be as listed and spaced as shown in the details. Anchor embedment to base material shall be beyond wall dressing or stucco.
2. When used in areas requiring wind-borne debris protection this product is required to be protected with an impact resistant covering that complies with Section R301.2.1.2 of the IRC and Section 1609.1.2 of the IBC.
3. Allowable design pressure requirements must be equal to or less than the design pressure rating shown in the design pressure chart, sheet 1 of this drawing.
4. Conditions not covered by this drawing are subject to further engineering analysis.

TABLE OF CONTENTS

SHEET#	DESCRIPTION
1	Typical elevations, design pressures & general notes
2	Door/Sidelite panel details (flush glazing)
3	Horizontal cross sections
4	Vertical cross sections
5	Vertical cross sections
6	Frame anchoring

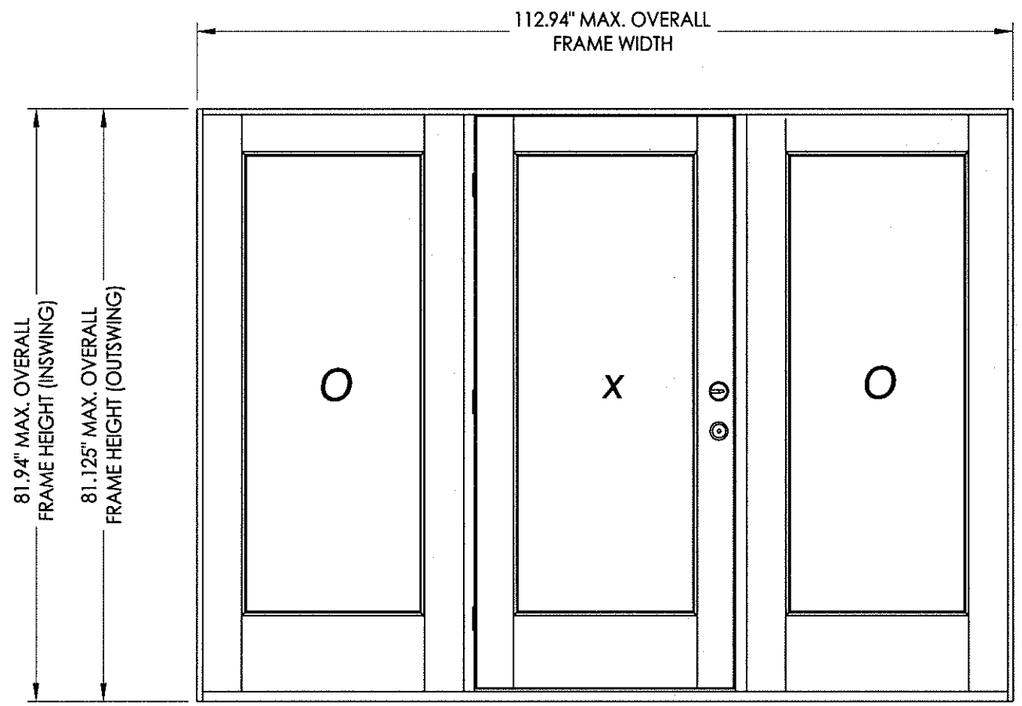

CONFIG.	MODEL	DESIGN PRESSURE (PSF)	
		POSITIVE	NEGATIVE
OXO	INSWING	+50.0	-55.0
	OUTSWING	+60.0	-60.0

STATE OF TEXAS
LYNDON F. SCHMIDT
104123
LICENSED PROFESSIONAL ENGINEER

Documents Prepared By: Lyndon F. Schmidt, P.E.
TEXAS P.E. #104123

RW BUILDING CONSULTANTS, INC.
P.O. Box 230 Valrico FL. 33595
Phone No.: 813.659.9197

TEXAS BOARD OF PROFESSIONAL ENGINEERS
CERTIFICATE OF REGISTRATION # F-11852

PRODUCT: ENDURA

PART OR ASSEMBLY: TYPICAL ELEVATION, DESIGN PRESSURES & GENERAL NOTES

NO.	DATE	BY
1	1/07/14	LFS

REVISIONS: ADDED ARTICULATING SILL

DATE: 8/07/12
SCALE: N.T.S.
DWG. BY: JK
CHK. BY: LFS
DRAWING NO.: TX-4206
SHEET 1 OF 6

R:\A - Projects\Project Folders\Proj 1601 - 1700\PF 1675\D. RWBC Drawings\TX-4204-07.dwg, TX-4206

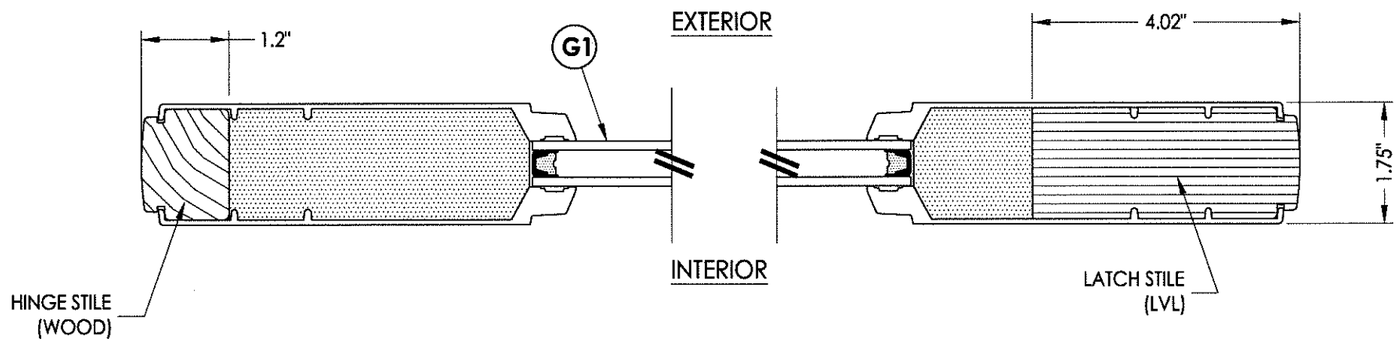

1/2 **HORIZONTAL CROSS SECTION**

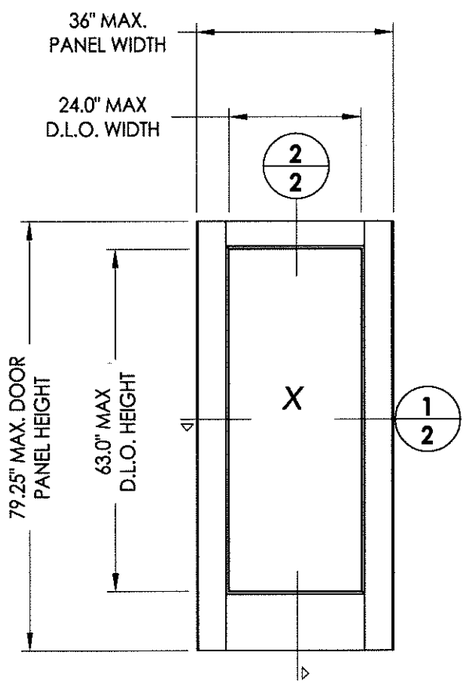

THERMA TRU - Flush Glazed
Door/Sidelite Panel
(fiberglass)

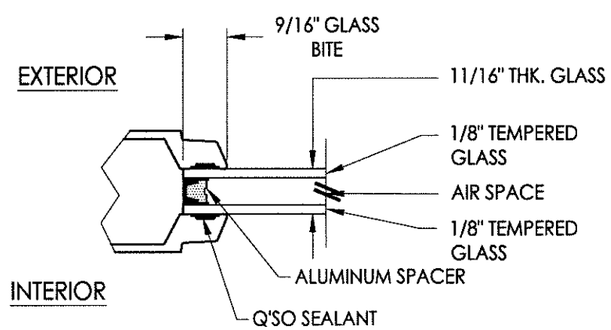

G1 **GLAZING DETAIL**

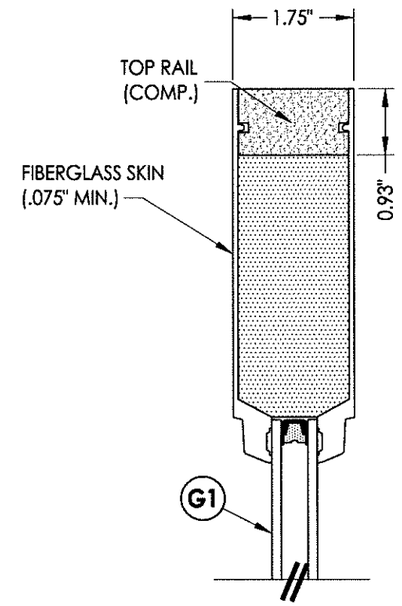

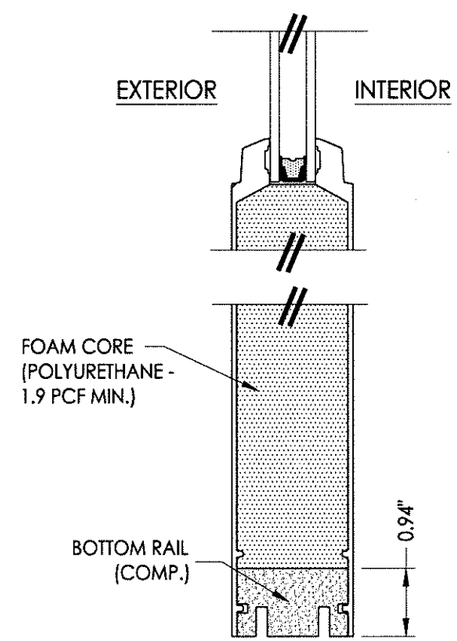

2/2 **VERTICAL CROSS SECTION**

STATE OF TEXAS
LYNDON F. SCHMIDT
104123
LICENSED
PROFESSIONAL ENGINEER

7-7-14

Documents Prepared By: Lyndon F. Schmidt, P.E.
TEXAS P.E. #104123

RW BUILDING CONSULTANTS, INC.
P.O. Box 230 Valrico FL. 33595
Phone No.: 813.659.9197

TEXAS BOARD OF PROFESSIONAL ENGINEERS
CERTIFICATE OF REGISTRATION # F-11852

PRODUCT: ENDURA

PART OR ASSEMBLY: SIDELITE PANEL DETAILS (FLUSH GLAZING)

REVISIONS

NO.	DATE		BY
1	1/07/14	ADDED ARTICULATING SILL	LFS

DATE: 8/07/12
SCALE: N.T.S.
DWG. BY: JK
CHK. BY: LFS
DRAWING NO.: TX-4206
SHEET 2 OF 6

© 2012 R.W. BUILDING CONSULTANTS INC.

R:\A - Projects\Project Folders\Proj 1601 - 1700\PF 1675\D. RWBC Drawings\TX-4204-07.dwg, 2.3

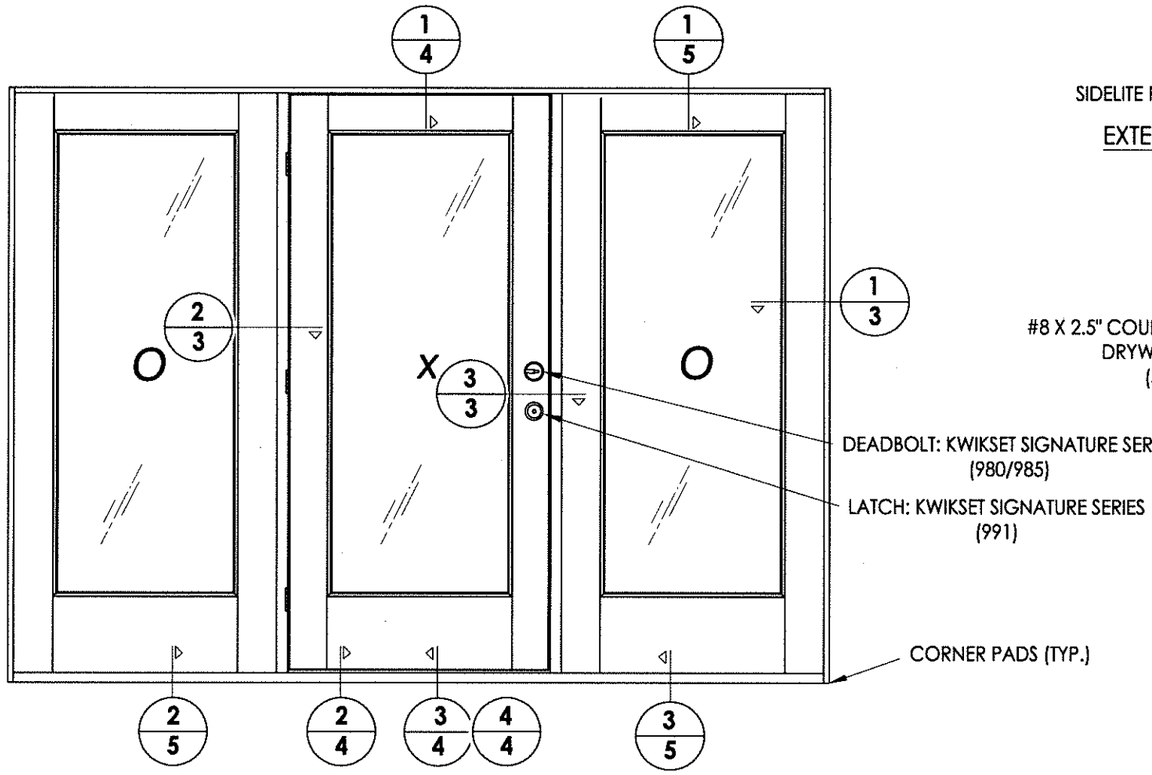

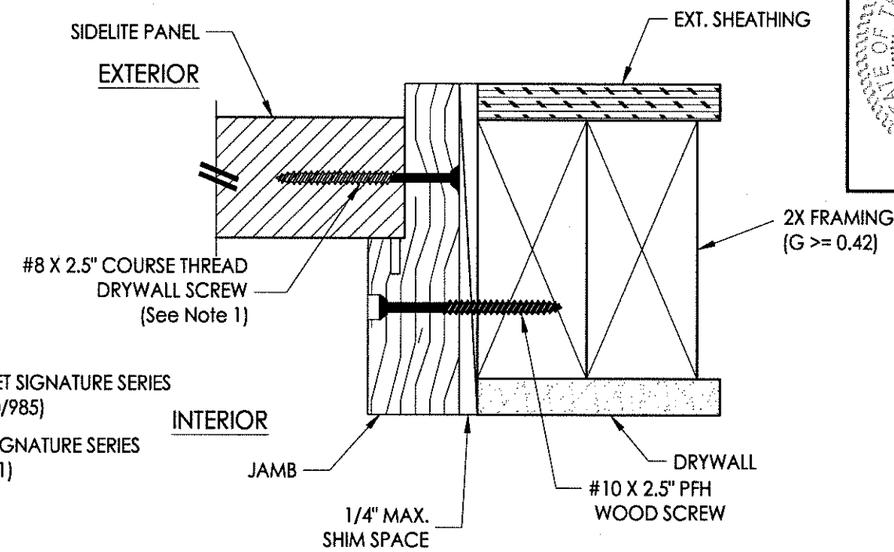

1/3 **HORIZONTAL CROSS SECTION**
Outswing shown - Inswing also approved

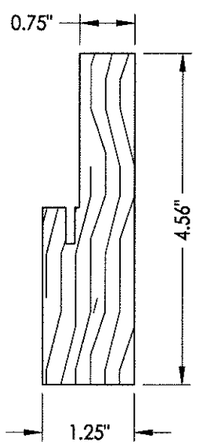

JAMB / HEAD
PINE

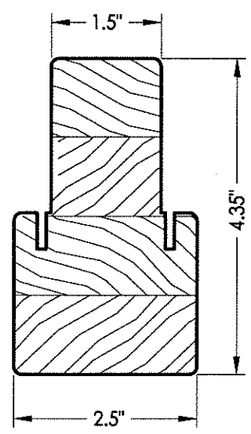

FATBOY MULLION
PINE

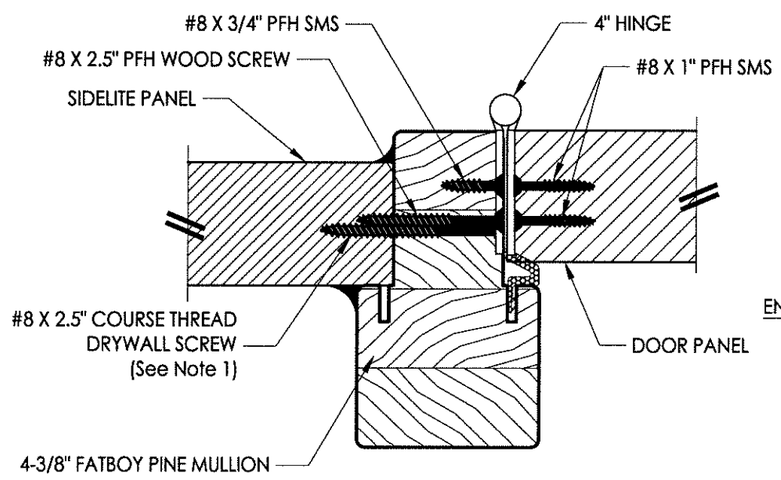

2/3 **HORIZONTAL CROSS SECTION**
Outswing shown - Inswing also approved

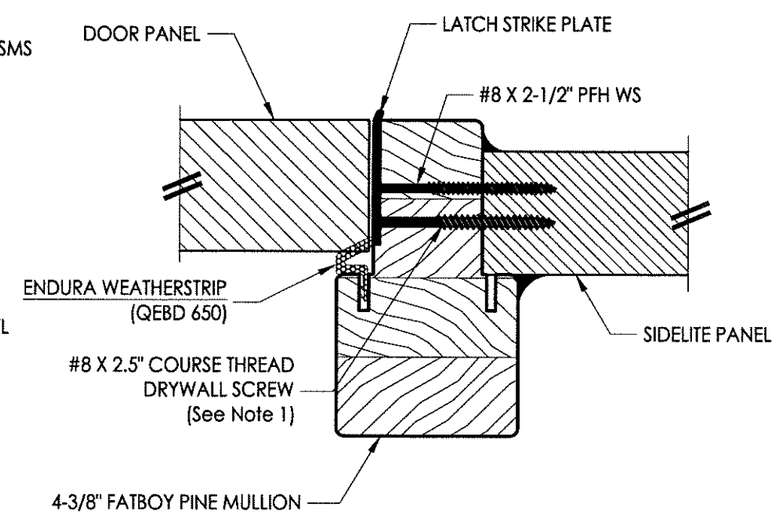

3/3 **HORIZONTAL CROSS SECTION**
Outswing shown - Inswing also approved

NOTE:
1. Spacing for sidelite screws: 6.5", 38.5" and 69" from head to sill (3 total).

STATE OF TEXAS — LYNDON F. SCHMIDT — 104123 — LICENSED PROFESSIONAL ENGINEER

Documents Prepared By: Lyndon F. Schmidt, P.E. TEXAS P.E. #104123
RW BUILDING CONSULTANTS, INC.
P.O. Box 230 Valrico FL. 33595
Phone No.: 813.659.9197
TEXAS BOARD OF PROFESSIONAL ENGINEERS CERTIFICATE OF REGISTRATION # F-11852

PRODUCT: ENDURA Steel DOOR
PART OR ASSEMBLY: HORIZONTAL CROSS SECTIONS

NO.	DATE	BY
1	1/07/14	LFS

REVISIONS: ADDED ARTICULATING SILL

DATE: 8/07/12
SCALE: N.T.S.
DWG. BY: JK
CHK. BY: LFS
DRAWING NO.: TX-4206
SHEET 3 OF 6

© 2012 R.W. BUILDING CONSULTANTS INC.

R:\A - Projects\Project Folders\Proj 1601 - 1700\PF 1675\D. RWBC Drawings\TX-4204-07.dwg, 3.3

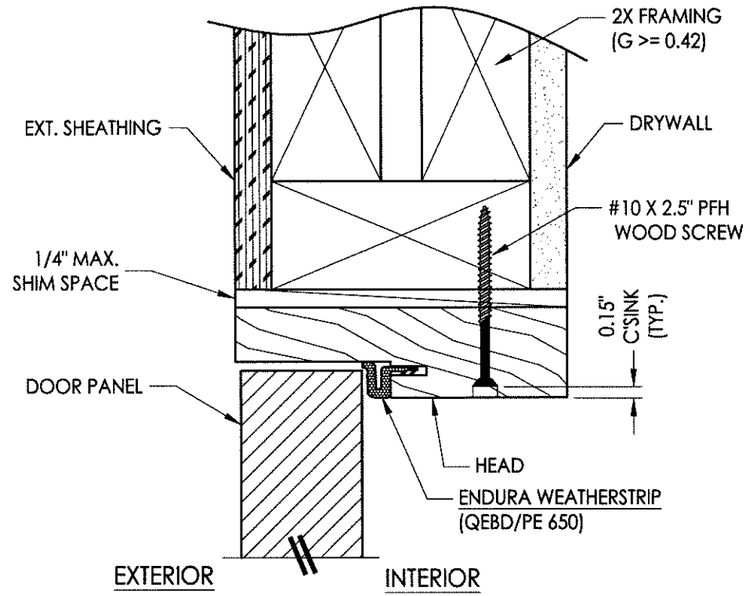

1/4 VERTICAL CROSS SECTION
Outswing shown - inswing also approved

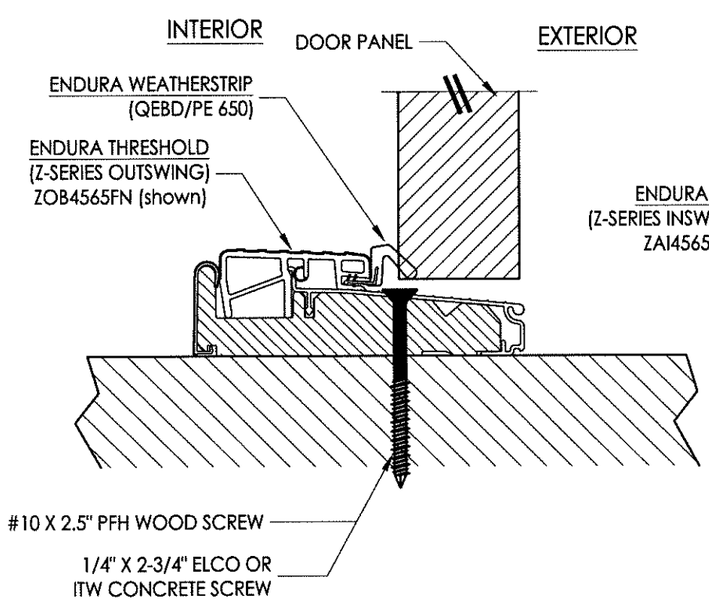

2/4 VERTICAL CROSS SECTION
Outswing shown

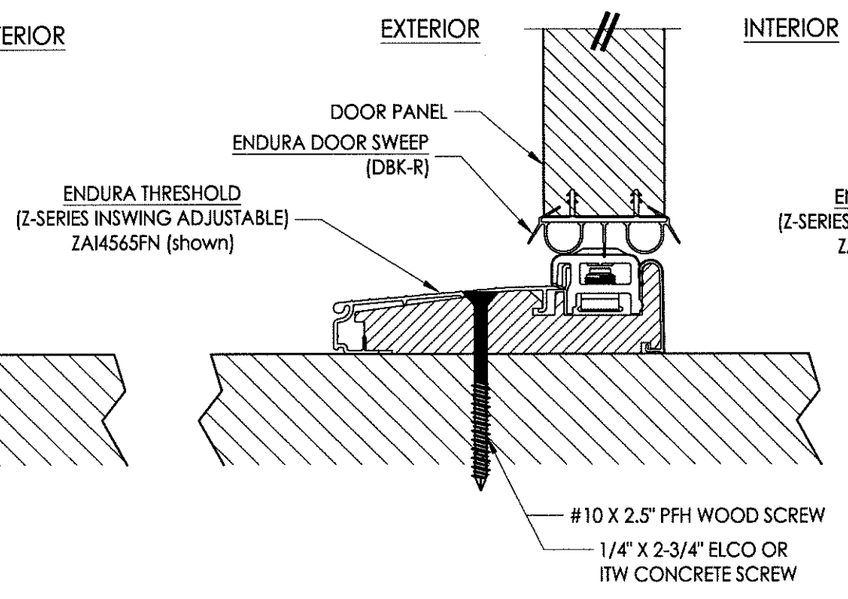

3/4 VERTICAL CROSS SECTION
Inswing configuration

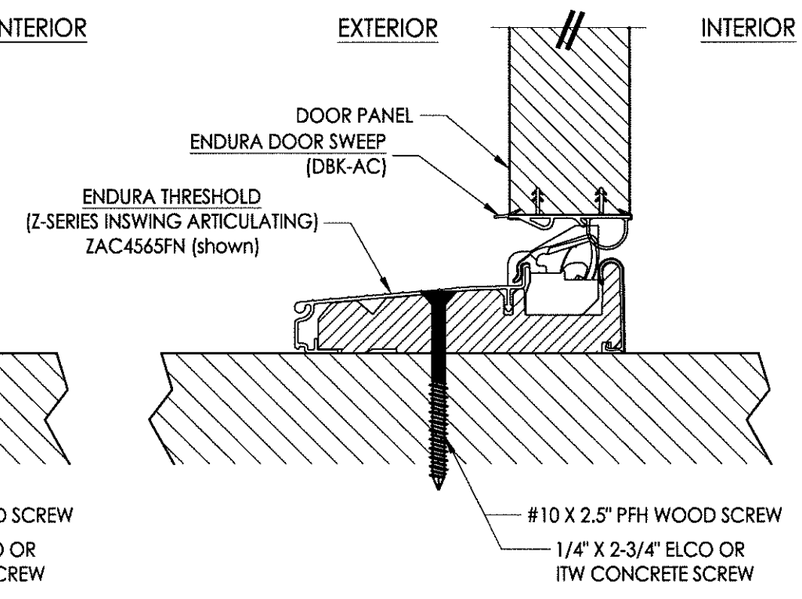

4/4 VERTICAL CROSS SECTION
Inswing configuration

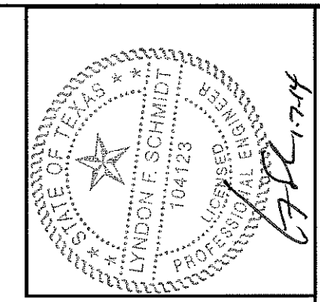

Documents Prepared By: Lyndon F. Schmidt, P.E.
TEXAS P.E. #104123

RW BUILDING CONSULTANTS, INC.
P.O. Box 230 Valrico FL. 33595
Phone No.: 813.659.9197

TEXAS BOARD OF PROFESSIONAL ENGINEERS
CERTIFICATE OF REGISTRATION # F-11852

PRODUCT: ENDURA

PART OR ASSEMBLY: VERTICAL CROSS SECTIONS

NO.	DATE	REVISIONS	BY
1	1/07/14	ADDED ARTICULATING SILL	LFS

DATE: 8/07/12
SCALE: N.T.S.
DWG. BY: JK
CHK. BY: LFS
DRAWING NO.: TX-4206
SHEET 4 OF 6

© 2012 R.W. BUILDING CONSULTANTS INC.

R:\A - Projects\Project Folders\Proj 1601 - 1700\PF 1675\D. RWBC Drawings\TX-4204-07.dwg, 4.3

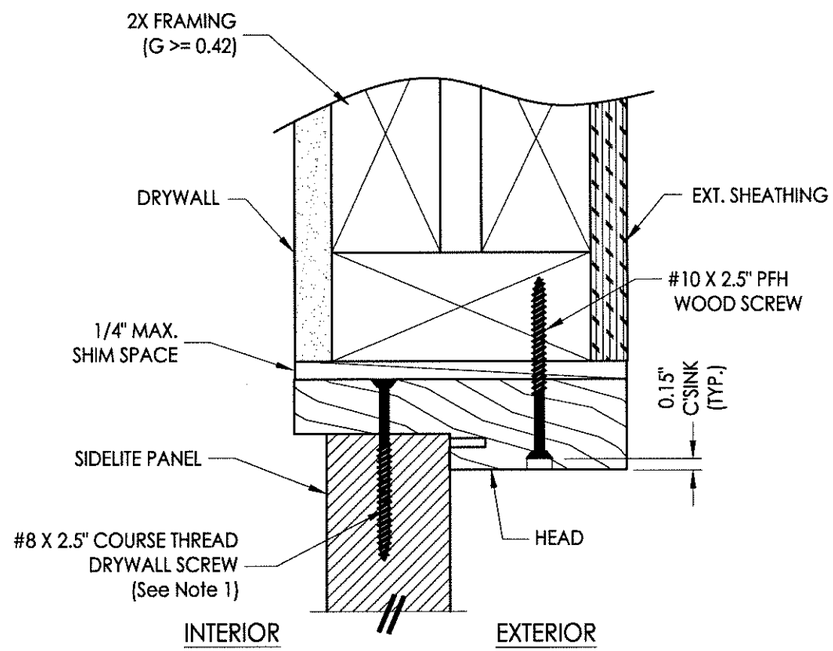

1/5 VERTICAL CROSS SECTION
Inswing shown - Outswing also approved

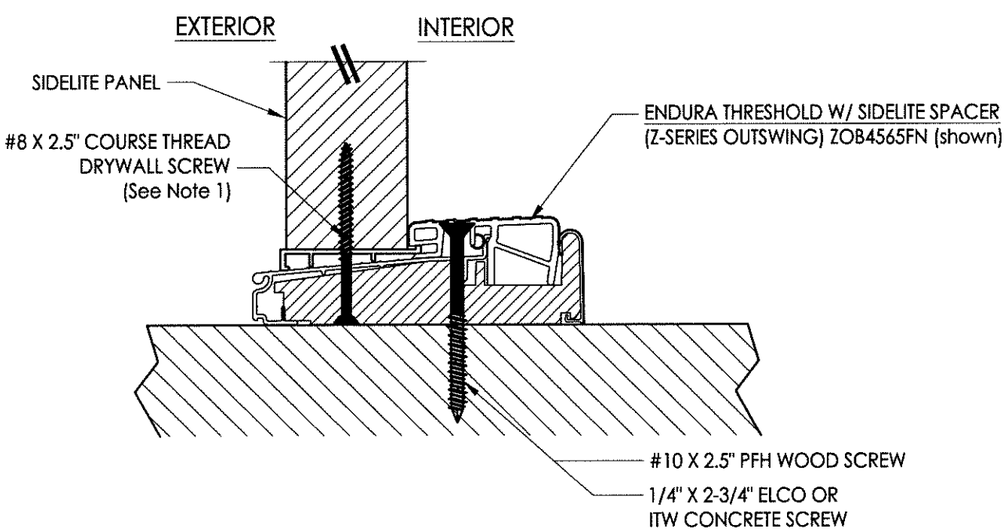

2/5 VERTICAL CROSS SECTION
Outswing configuration

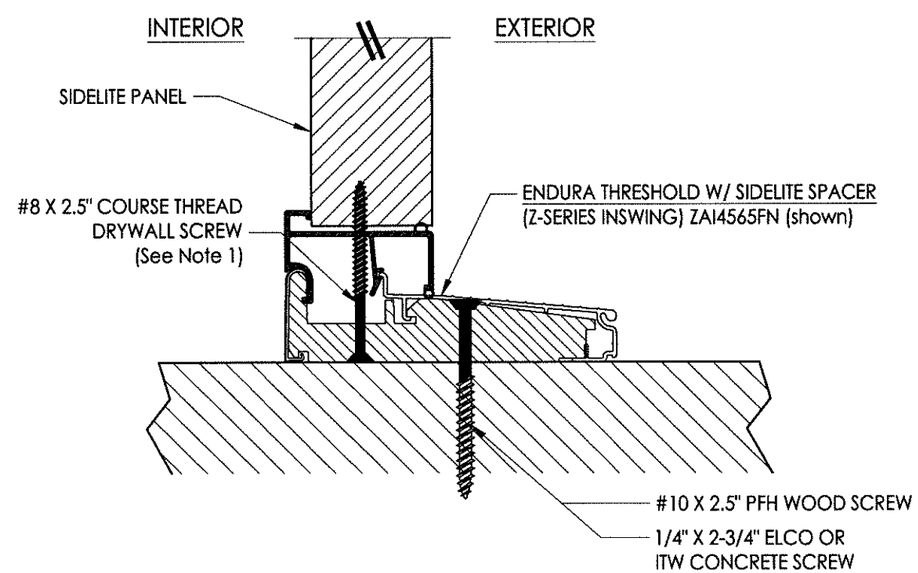

3/5 VERTICAL CROSS SECTION
Inswing configuration

1. NOTE:
Spacing for sidelite screws:
6" from each end (2 total).

STATE OF TEXAS
LYNDON F. SCHMIDT
104123
LICENSED
PROFESSIONAL ENGINEER
7.8.14

Documents Prepared By: Lyndon F. Schmidt, P.E.
TEXAS P.E. #104123

RW BUILDING CONSULTANTS, INC.
P.O. Box 230 Valrico FL. 33595
Phone No.: 813.659.9197

TEXAS BOARD OF PROFESSIONAL ENGINEERS
CERTIFICATE OF REGISTRATION # F-11852

PRODUCT: ENDURA Steel DOOR

PART OR ASSEMBLY: VERTICAL CROSS SECTIONS

NO.	DATE	REVISIONS	BY
1	1/07/14	ADDED ARTICULATING SILL	LFS

DATE: 8/07/12
SCALE: N.T.S.
DWG. BY: JK
CHK. BY: LFS
DRAWING NO.: TX-4206
SHEET 5 OF 6

© 2012 R.W. BUILDING CONSULTANTS INC.

R:\A - Projects\Project Folders\Proj 1601 - 1700\PF 1675\D. RWBC Drawings\TX-4204-07.dwg, 5.3

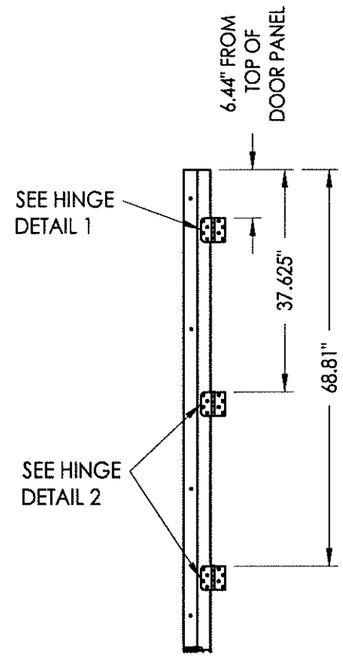

HINGE JAMB

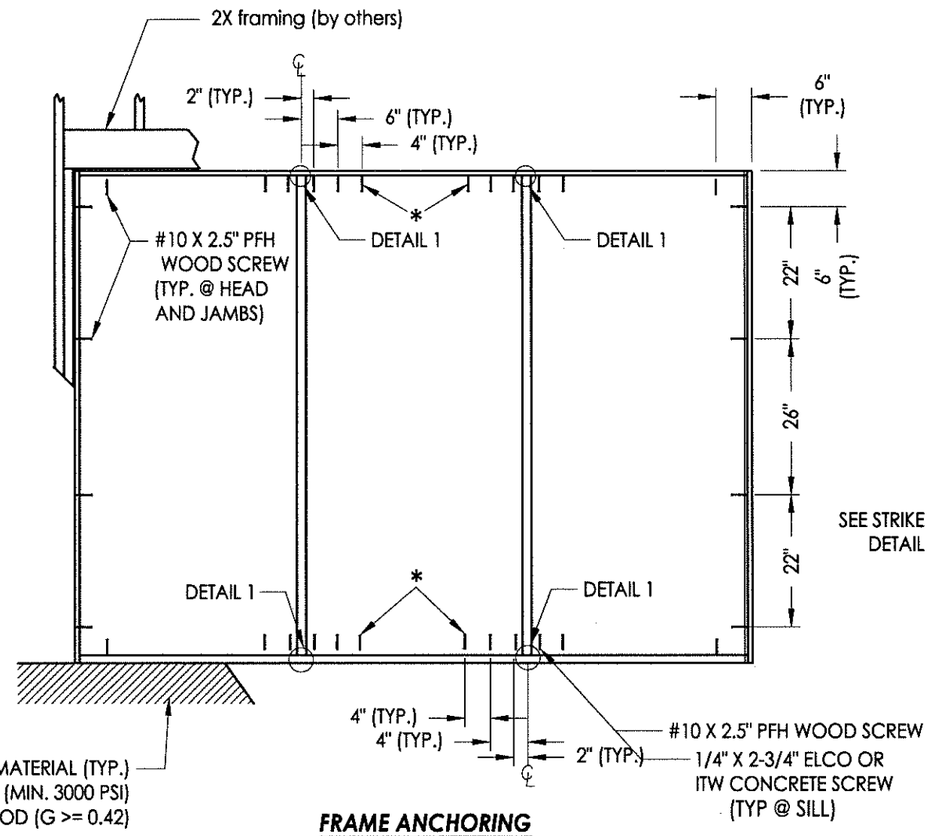

FRAME ANCHORING
OXO

*NOTE: These anchors required for D.P. > 45 PSF.

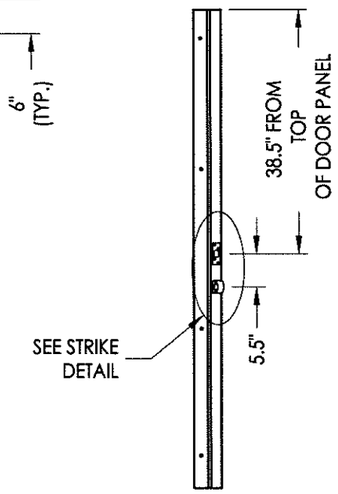

STRIKE JAMB

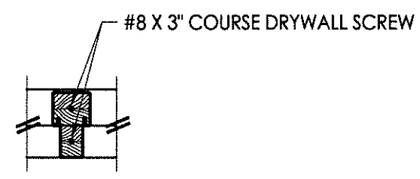

DETAIL 1
Integral mullion attachment

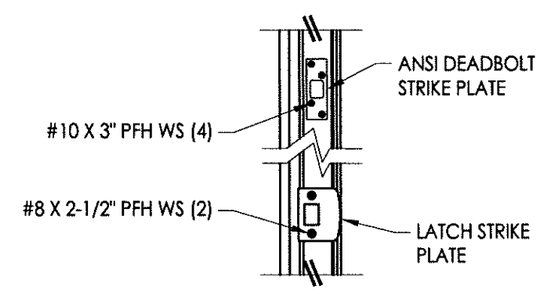

STRIKE DETAIL

CONCRETE ANCHOR NOTES:

1. *Concrete anchor locations at the corners may be adjusted to maintain the min. edge distance to mortar joints.*
2. *Concrete anchor locations noted as "MAX. ON CENTER" must be adjusted to maintain the min. edge distance to mortar joints, additional concrete anchors may be required to ensure the "MAX. ON CENTER" dimension are not exceeded.*
3. *Concrete anchor table:*

ANCHOR TYPE	ANCHOR SIZE	MIN. EMBEDMENT	MIN. CLEARANCE TO MASONRY EDGE	MIN. CLEARANCE TO ADJACENT ANCHOR
ITW TAPCON®	1/4"	1-3/4"	2-1/2"	3"
ELCO ULTRACON®	1/4"	1-3/4"	1"	3"

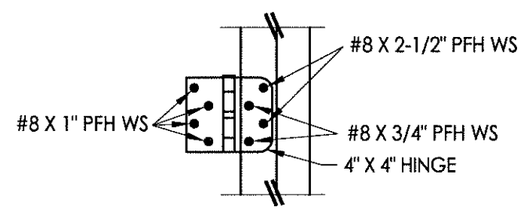

HINGE DETAIL 1

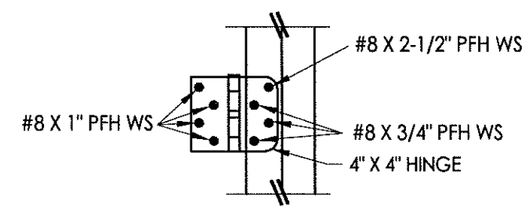

HINGE DETAIL 2

Documents Prepared By: Lyndon F. Schmidt, P.E. TEXAS P.E. #104123
RW BUILDING CONSULTANTS, INC.
P.O. Box 230 Valrico FL. 33595
Phone No.: 813.659.9197
TEXAS BOARD OF PROFESSIONAL ENGINEERS CERTIFICATE OF REGISTRATION # F-11852

STATE OF TEXAS — LYNDON F. SCHMIDT — 104123 — LICENSED PROFESSIONAL ENGINEER

1-7-14

PRODUCT: ENDURA

PART OR ASSEMBLY: FRAME ANCHORING

NO.	DATE	REVISIONS	BY
1	1/07/14	ADDED ARTICULATING SILL	LFS

DATE: 8/07/12
SCALE: N.T.S.
DWG. BY: JK
CHK. BY: LFS
DRAWING NO.: TX-4206
SHEET 6 OF 6

© 2012 R.W. BUILDING CONSULTANTS INC.

R:\A - Projects\Project Folders\Proj 1601 - 1700\PF 1675\D. RWBC Drawings\TX-4204-07.dwg, 6.3