PLYCO CORPORATION

SERIES 20EV GLAZED STEEL OUTSWING DOOR (NON-IMPACT)

INSTALLATION NOTES:

1. ONE (1) INSTALLATION ANCHOR IS REQUIRED AT EACH ANCHOR LOCATION SHOWN UNLESS OTHERWISE NOTED.
2. THE NUMBER OF INSTALLATION ANCHORS DEPICTED IS THE MINIMUM NUMBER OF ANCHORS TO BE USED FOR PRODUCT INSTALLATION.
3. INSTALL INDIVIDUAL INSTALLATION ANCHORS WITHIN A TOLERANCE OF ±1/2 INCH OF THE DEPICTED LOCATION IN THE ANCHOR LAYOUT DETAIL (I.E., WITHOUT CONSIDERATION OF TOLERANCES). TOLERANCES ARE NOT CUMULATIVE FROM ONE INSTALLATION ANCHOR TO THE NEXT.
4. SHIM AS REQUIRED AT EACH INSTALLATION ANCHOR WITH LOAD BEARING SHIM(S). MAXIMUM ALLOWABLE SHIM STACK TO BE 1/4 INCH. SHIM WHERE SPACE OF 1/16 INCH OR GREATER OCCURS. SHIM(S) SHALL BE CONSTRUCTED OF HIGH DENSITY PLASTIC OR BETTER.
5. FOR INSTALLATION INTO WOOD FRAMING USE **#10 WOOD SCREWS** OF SUFFICIENT LENGTH TO ACHIEVE 1 1/2 INCH MINIMUM EMBEDMENT INTO WOOD SUBSTRATE.
6. FOR INSTALLATION THROUGH 1X BUCK TO CONCRETE/MASONRY, OR DIRECTLY INTO CONCRETE/MASONRY, USE **3/16 INCH DIAMETER ITW TAPCONS** OF SUFFICIENT LENGTH TO ACHIEVE 1 1/4 INCH MINIMUM EMBEDMENT.
7. FOR INSTALLATION INTO STEEL STUD FRAME USE **#10-16 TEK SCREWS** OF SUFFICIENT LENGTH TO ACHIEVE A MINIMUM 3 THREADS PENETRATION BEYOND STEEL STRUCTURE.
8. MINIMUM EMBEDMENT AND EDGE DISTANCE EXCLUDE WALL FINISHES, INCLUDING BUT NOT LIMITED TO STUCCO, FOAM, BRICK VENEER, AND SIDING.
9. INSTALLATION ANCHORS AND ASSOCIATED HARDWARE MUST BE MADE OF CORROSION RESISTANT MATERIAL OR HAVE A CORROSION RESISTANT COATING.
10. FOR HOLLOW BLOCK AND GROUT FILLED BLOCK, DO NOT INSTALL INSTALLATION ANCHORS INTO MORTAR JOINTS. EDGE DISTANCE IS MEASURED FROM FREE EDGE OF BLOCK OR EDGE OF MORTAR JOINT INTO FACE SHELL OF BLOCK.
11. INSTALLATION ANCHORS SHALL BE INSTALLED IN ACCORDANCE WITH ANCHOR MANUFACTURER'S INSTALLATION INSTRUCTIONS, AND ANCHORS SHALL NOT BE USED IN SUBSTRATES WITH STRENGTHS LESS THAN THE MINIMUM STRENGTH SPECIFIED BY THE ANCHOR MANUFACTURER.
12. INSTALLATION ANCHOR CAPACITIES FOR PRODUCTS HEREIN ARE BASED ON SUBSTRATE MATERIALS WITH THE FOLLOWING PROPERTIES:
    A. WOOD - MINIMUM SPECIFIC GRAVITY OF 0.42.
    B. CONCRETE -MINIMUM COMPRESSIVE STRENGTH OF 2700 PSI.
    C. MASONRY - STRENGTH CONFORMANCE TO ASTM C-90, GRADE N, TYPE 1 (OR GREATER), MIN. COMPRESSIVE STRENGTH = 1.5 KSI.
    D. STEEL - MINIMUM YIELD STRENGTH OF 33 KSI. MINIMUM WALL THICKNESS OF 48 MILS (18 GAUGE).

GENERAL NOTES:

1. THE PRODUCT SHOWN HEREIN IS DESIGNED AND MANUFACTURED TO COMPLY WITH THE 2006 INTERNATIONAL BUILDING CODE (IBC) AND INTERNATIONAL RESIDENTIAL CODE (IRC) WITH 2006 TEXAS REVISIONS, EFFECTIVE JANUARY 1, 2008 AND HAS BEEN EVALUATED ACCORDING TO THE FOLLOWING:
    - ASTM E 283-04
    - ASTM E 330-02
    - ASTM E 331-00
2. ADEQUACY OF THE EXISTING STRUCTURAL CONCRETE/MASONRY AND 2X FRAMING AS A MAIN WIND FORCE RESISTING SYSTEM CAPABLE OF WITHSTANDING AND TRANSFERRING APPLIED PRODUCT LOADS TO THE FOUNDATION IS THE RESPONSIBILITY OF THE ENGINEER OR ARCHITECT OF RECORD FOR THE PROJECT OF INSTALLATION.
3. 1X AND 2X BUCKS (WHEN USED) SHALL BE DESIGNED AND ANCHORED TO PROPERLY TRANSFER ALL LOADS TO THE STRUCTURE. BUCK DESIGN AND INSTALLATION IS THE RESPONSIBILITY OF THE ENGINEER OR ARCHITECT OF RECORD FOR THE PROJECT OF INSTALLATION.
4. THE INSTALLATION DETAILS DESCRIBED HEREIN ARE GENERIC AND MAY NOT REFLECT ACTUAL CONDITIONS FOR A SPECIFIC SITE. IF SITE CONDITIONS CAUSE INSTALLATION TO DEVIATE FROM THE REQUIREMENTS DETAILED HEREIN, A LICENSED ENGINEER OR ARCHITECT SHALL PREPARE SITE SPECIFIC DOCUMENTS FOR USE WITH THIS DOCUMENT.
5. APPROVED IMPACT PROTECTIVE SYSTEM **IS REQUIRED** ON THIS PRODUCT IN AREAS REQUIRING IMPACT RESISTANCE.
6. FRAME MATERIAL: ALUMINUM 6063-T5 & CS-B STEEL.
7. ALL EXPOSED STEEL COMPONENTS ARE GALVANIZED AND SHOP PRIMED.
8. GLASS MEETS THE REQUIREMENTS OF ASTM E 1300-04 GLASS CHARTS. SEE SHEET 3 FOR GLAZING DETAIL.

TABLE OF CONTENTS

SHEET	REVISION	SHEET DESCRIPTION
1	-	INSTALLATION & GENERAL NOTES
2	-	ELEVATION & ANCHOR LAYOUT
3	-	VERTICAL SECTIONS & GLAZING DETAIL
4	-	HORIZONTAL SECTIONS
5	A	COMPONENTS & BILL OF MATERIALS

DESIGN PRESSURE RATING

LOCK TYPE	DESIGN PRESSURE - ALL SIZES		MISSILE IMPACT RATING
SINGLE POINT	+45.0 / -45.0 PSF *	W/O WATER INFILTRATION	NON-IMPACT
SINGLE POINT W/ DEAD BOLT	+45.0 / -45.0 PSF *	W/O WATER INFILTRATION	NON-IMPACT

*UNIT SHALL BE INSTALLED AT LOCATION PROTECTED BY OVERHANG SUCH THE OVERHANG RATIO (OH) = OH LENGTH/OH HEIGHT GREATER THAN 1.0 WHERE WATER INFILTRATION IS REQUIRED.

PLYCO

PLYCO CORPORATION
P.O. BOX 386
500 INDUSTRIAL RD.
ELKHART LAKE WI 53020
PH: (920) 876-3611 FX: (920) 876-3527

TITLE: SERIES 20EV GLAZED STEEL OUTSWING DOOR INSTALLATION & GENERAL NOTES

PREPARED BY:
BUILDING DROPS, INC.
398 E. DANIA BEACH BLVD. #338
DANIA BEACH, FL 33004
PH: (954) 399-8478 FX: (954) 744-4738

REVISIONS

NO.	DESCRIPTION	BY	DATE

STATE OF TEXAS
ALEXIS SPYROU
102957
LICENSED
PROFESSIONAL ENGINEER
10-31-12

ALEXIS SPYROU, P.E.
TEXAS P.E. NO. 102957
398 E. DANIA BEACH BLVD. #338
DANIA BEACH, FL 33004

DATE: 03.19.12 | DWN BY: GRN | CHK BY: JLA | SCALE: NTS

DWG #: PCO015

SHEET: 1 OF 5

9/20/2012 1:11 PM

s:\projects\plyco corp\1tdi-12-0241.1 (series 20ev glazed inswing door)\dwgs\pco015.dwg

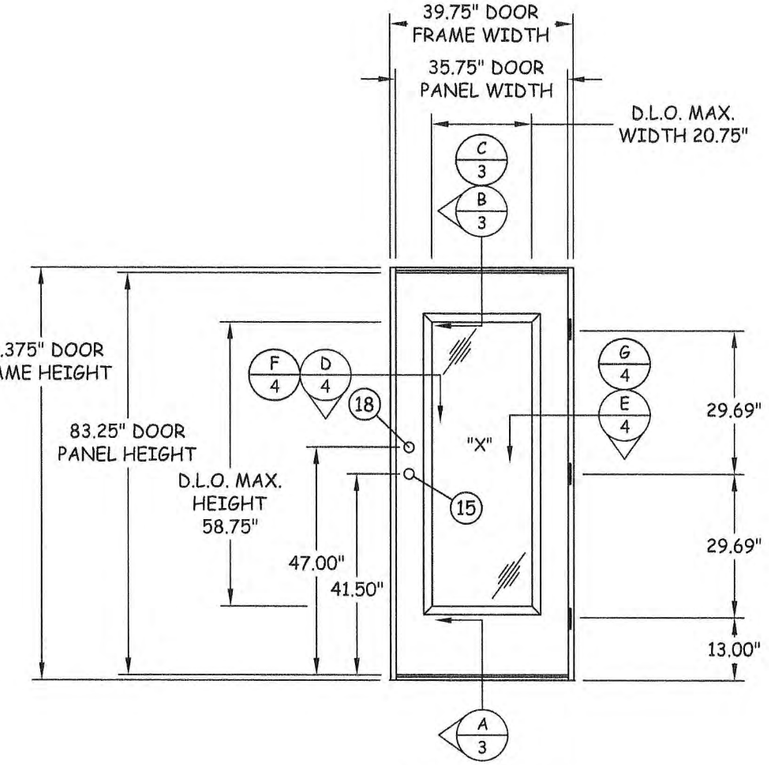

ELEVATION

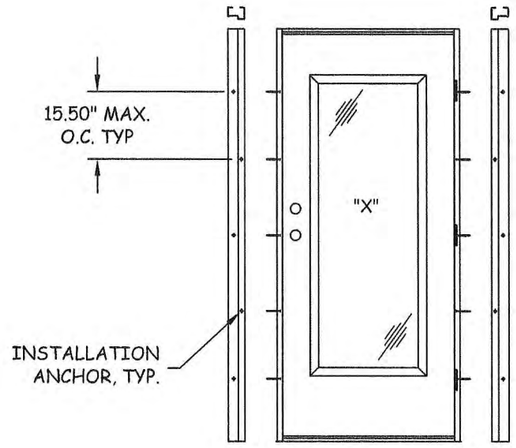

ANCHOR LAYOUT

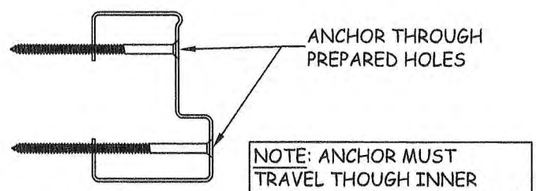

TYP. ANCHOR PLACEMENT

PLYCO

PLYCO CORPORATION
P.O. BOX 386
500 INDUSTRIAL RD.
ELKHART LAKE WI 53020
PH: (920) 876-3611 FX: (920) 876-3527

TITLE: SERIES 20EV GLAZED STEEL OUTSWING DOOR
ELEVATION & ANCHOR LAYOUT

PREPARED BY:
BUILDING DROPS, INC.
398 E. DANIA BEACH BLVD. #338
DANIA BEACH, FL 33004
PH: (954) 399-8478 FX: (954) 744-4738

REVISIONS

NO.	DESCRIPTION	BY	DATE

STATE OF TEXAS
ALEXIS SPYROU
102957
LICENSED
PROFESSIONAL ENGINEER
ALEXIS SPYROU, P.E.
TEXAS P.E. NO. 102957
398 E. DANIA BEACH BLVD. #338
DANIA BEACH, FL 33004
10-31-12

DATE: 03.19.12
DWN BY: GRN
CHK BY: JLA
SCALE: NTS

DWG #: PCO015

SHEET: 2 OF 5

9/20/2012 1:11 PM

s:\projects\plyco corp\tdl-12-02411 (series 20ev glazed inswing door)\dwgs\pco015.dwg

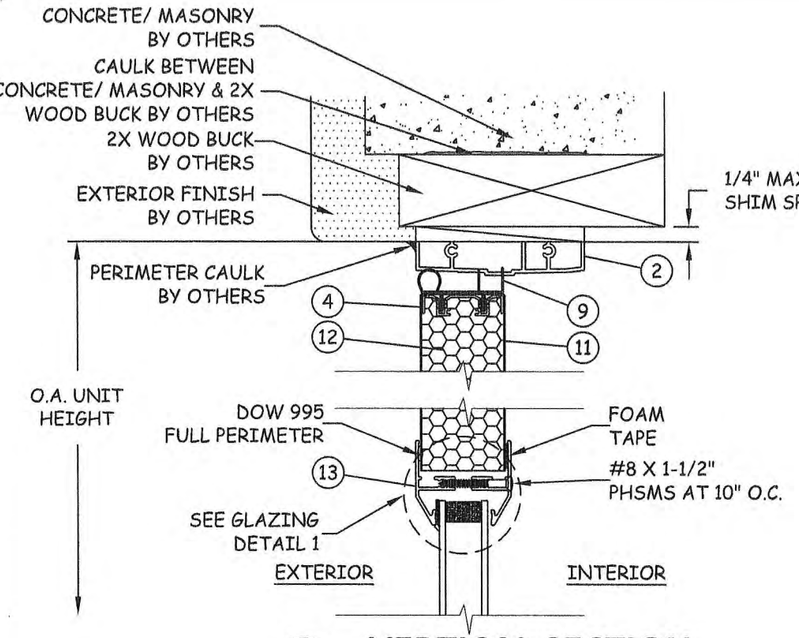

B/3 VERTICAL SECTION
HEAD - 2X WOOD BUCK

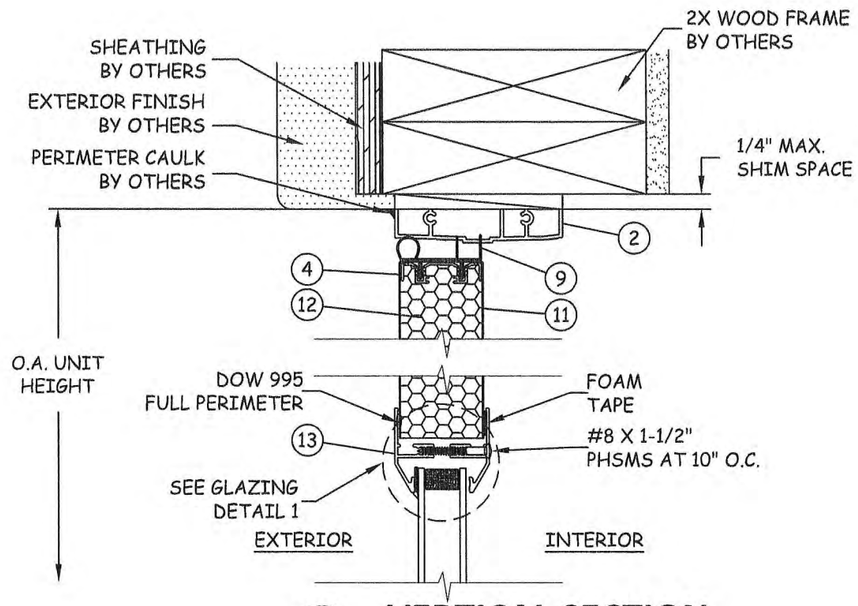

C/3 VERTICAL SECTION
HEAD - 2X WOOD FRAME

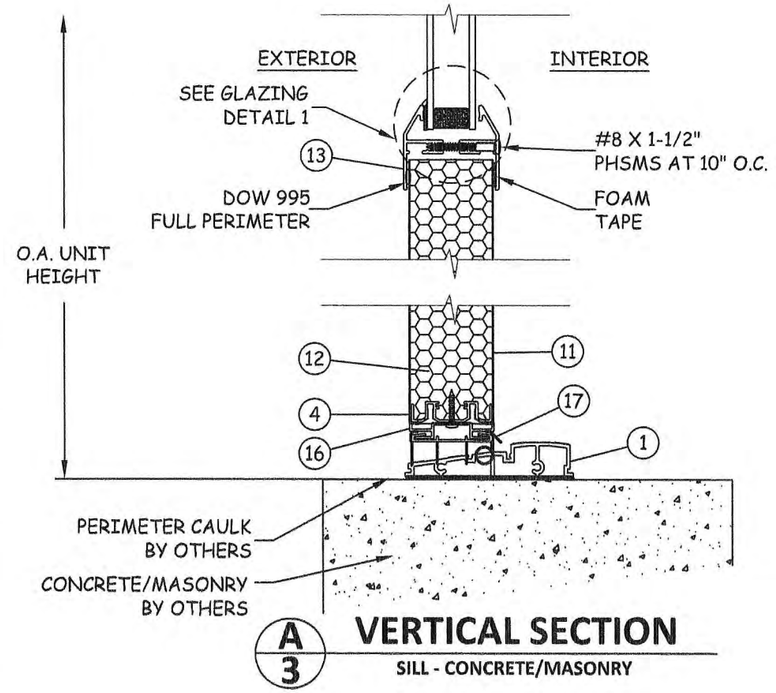

A/3 VERTICAL SECTION
SILL - CONCRETE/MASONRY

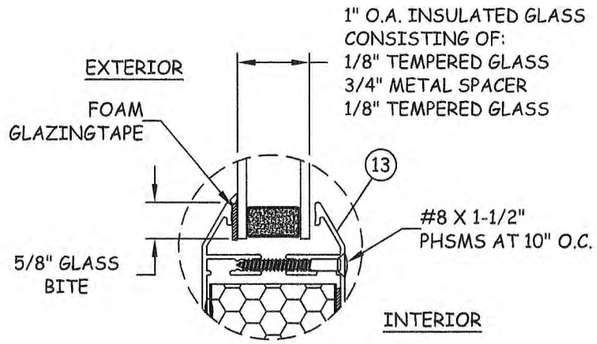

GLAZING DETAIL 1

10-31-12

PLYCO
PLYCO CORPORATION
P.O. BOX 386
500 INDUSTRIAL RD.
ELKHART LAKE WI 53020
PH: (920) 876-3611 FX: (920) 876-3527

TITLE: SERIES 20EV GLAZED STEEL OUTSWING DOOR VERTICAL SECTIONS & GLAZING DETAIL

PREPARED BY:
BUILDING DROPS, INC.
398 E. DANIA BEACH BLVD. #338
DANIA BEACH, FL 33004
PH: (954) 399-8478 FX: (954) 744-4738

REVISIONS

NO.	DESCRIPTION	BY	DATE

STATE OF TEXAS
ALEXIS SPYROU
102957
LICENSED
PROFESSIONAL ENGINEER
ALEXIS SPYROU P.E.
TEXAS P.E. NO. 102957
398 E. DANIA BEACH BLVD. #338
DANIA BEACH, FL 33004

DATE: 03.19.12 | DWN BY: GRN | CHK BY: JLA | SCALE: NTS

DWG #: PCO015

SHEET: 3 OF 5

9/20/2012 1:11 PM

s:\projects\plyco corp\tdi-12-02411 (series 20ev glazed inswing door)\dwgs\pco015.dwg

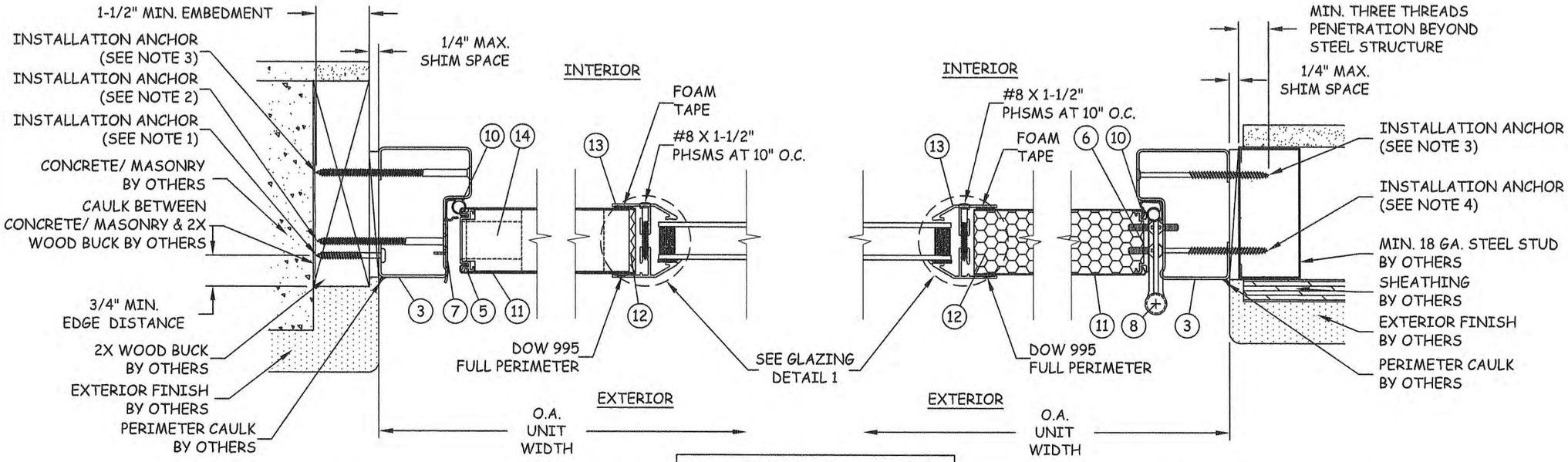

D/4 HORIZONTAL SECTION

JAMB - 2X WOOD BUCK, TYP.

E/4 HORIZONTAL SECTION

JAMB - STEEL STUD, TYP.

INSTALLATION ANCHOR NOTES

1. ANCHOR THROUGH FRAME RETURN
2. ANCHOR THROUGH STRIKE-SIDE FRAME
3. ANCHOR THROUGH MAIN FRAME
4. ANCHOR THROUGH HINGE
5. SEE INSTALLATION NOTES ON SHEET 1 FOR APPLICABLE ANCHOR TYPES & SUBSTRATES.

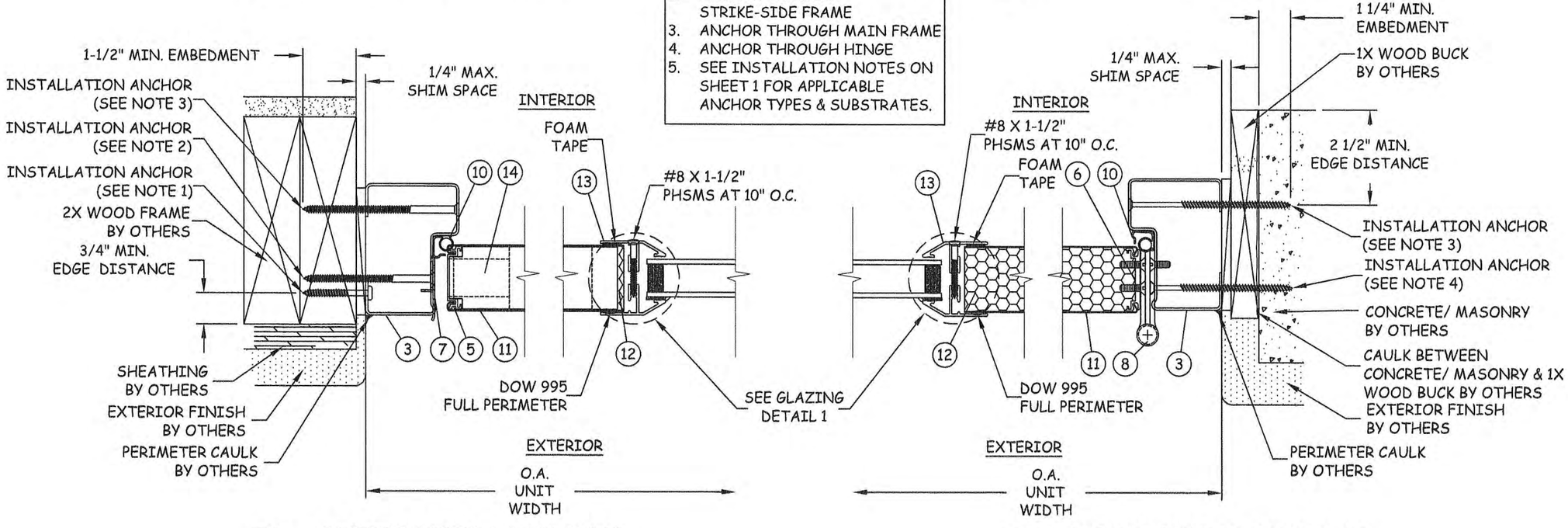

F/4 HORIZONTAL SECTION

JAMB - 2X WOOD FRAME, TYP.

G/4 HORIZONTAL SECTION

JAMB - MASONRY/CONCRETE, TYP.

PLYCO

PLYCO CORPORATION
P.O. BOX 386
500 INDUSTRIAL RD.
ELKHART LAKE WI 53020
PH: (920) 876-3611 FX: (920) 876-3527

TITLE: SERIES 20EV GLAZED STEEL OUTSWING DOOR HORIZONTAL SECTIONS

PREPARED BY:
BUILDING DROPS, INC.
398 E. DANIA BEACH BLVD. #338
DANIA BEACH, FL 33004
PH: (954) 399-8478 FX: (954) 744-4738

REVISIONS

NO.	DESCRIPTION	BY	DATE

STATE OF TEXAS
ALEXIS SPYROU
102957
LICENSED
PROFESSIONAL ENGINEER
10.3.12

DATE: 03.19.12 | DWN BY: GRN | CHK BY: JLA | SCALE: NTS

DWG #: PCO015

SHEET: 4 OF 5

9/20/2012 1:11 PM
s:\projects\plyco corp\tdi-12-0241.1 (series 20ev glazed inswing door)\dwgs\pco015.dwg

BILL OF MATERIALS

ITEM NO.	DESCRIPTION	PARTS NUMBERS	MATERIAL	MANUFACTURER
1	FRAME SILL	1647	6063-T5	MODERN DOOR
2	FRAME HEAD	1554	6063-T5	MODERN DOOR
3	FRAME JAMB	1539	STEEL	MODERN DOOR
4	HEAD & SILL RAIL	1838-1A	6063-T5	MODERN DOOR
5	STRIKE RAIL	1839	6063-T5	MODERN DOOR
6	HINGE RAIL	1840-B	6063-T5	MODERN DOOR
7	STRIKE PLATE	---	STEEL	MODERN DOOR
8	4" BUTT HINGE	---	STEEL	MODERN DOOR
9	DOOR SWEEP (HEAD)	---	PVC-ALCRYN	MODERN DOOR
10	WEATHERSTRIPPING	---	PVC	MODERN DOOR
11	DOOR SKIN	---	0.021" STEEL	MODERN DOOR
12	PANEL CORE	---	POLYURETHANE	MODERN DOOR
13	LITE-KIT FRAME	HM-23323	6063-T5	MODERN DOOR
14	LOCK BLOCK	---	WOOD	MODERN DOOR
15	S51PD-GR. 2 TUBULAR LOCKSET	---	STEEL	SCHLAGE
16	SWEEP ADAPTOR	---	6063-T5	MODERN DOOR
17	DOOR SWEEP (SILL)	---	PVC-ALCRYN	MODERN DOOR
18	B60N SK-1 GR. 1 DEADBOLT (OPT.)	---	STEEL	SCHLAGE

NOTE: ALL EXPOSED STEEL COMPONENTS ARE GALVANIZED AND SHOP PRIMED.

1 FRAME SILL
ALUMINUM 6063-T5

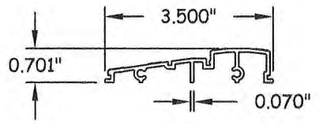

2 FRAME HEAD
ALUMINUM 6063-T5

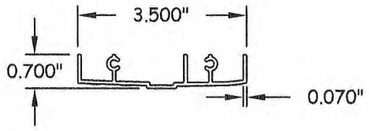

3 FRAME JAMB
16 GA. STEEL

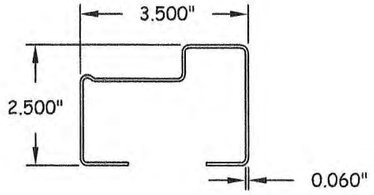

4 HEAD & SILL RAIL
ALUMINUM 6063-T5

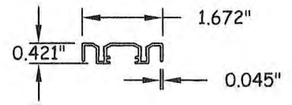

5 STRIKE RAIL
ALUMINUM 6063-T5

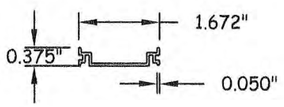

6 HINGE RAIL
ALUMINUM 6063-T5

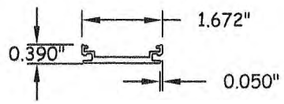

7 STRIKE PLATE
18 GA. STEEL

8 4" BUTT HINGE
STEEL

ZINC-PLATED MILD STEEL
OR
304 STAINLESS STEEL

9 DOOR SWEEP (HEAD)
PVC-ALCRYN

10 WEATHERSTRIPPING
PVC

13 LITE-KIT FRAME
ALUMINUM 6063-T5

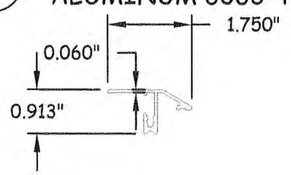

14 LOCK BLOCK
WOOD

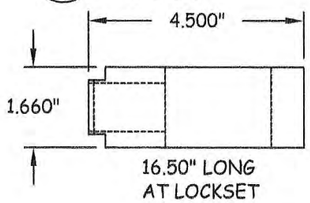

16 SWEEP ADAPTOR
ALUMINUM 6063-T5

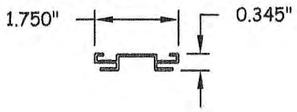

17 DOOR SWEEP (SILL)
PVC-ALCRYN

PLYCO
PLYCO CORPORATION
P.O. BOX 386
500 INDUSTRIAL RD.
ELKHART LAKE WI 53020
PH: (920) 876-3611 FX: (920) 876-3527

TITLE: SERIES 20EV GLAZED STEEL OUTSWING DOOR COMPONENTS & BILL OF MATERIALS

PREPARED BY:
BUILDING DROPS, INC.
398 E. DANIA BEACH BLVD. #338
DANIA BEACH, FL 33004
PH: (954) 399-8478 FX: (954) 744-4738

REVISIONS

DESCRIPTION	BY	DATE
SPECIFIED HARDWARE SERIES	JLA	09.20.12

STATE OF FLORIDA
ALEXIS SPYROU
102957
LICENSED
PROFESSIONAL ENGINEER
10-3-12
ALEXIS SPYROU, P.E.
TEXAS P.E. NO. 102957
398 E. DANIA BEACH BLVD. #338
DANIA BEACH, FL 33004

DATE: 03.19.12
DWN BY: GRN
CHK BY: JLA
SCALE: NTS

DWG #: PCO015

SHEET: 5 OF 5

9/20/2012 1:11 PM

s:\projects\plyco corp\tdl-12-0241 (series 20ev glazed inswing door)\dwgs\pco015.dwg