COASTAL INNOVATIVE PRODUCTS

LANAI SERIES E3 HURRICANE OUTWARD OPENING BI-FOLD DOOR

INSTALLATION NOTES:

1. ONE (1) INSTALLATION ANCHOR IS REQUIRED AT EACH ANCHOR LOCATION SHOWN. (SEE ANCHOR LAYOUT SHEETS 2 - 4)
2. THE NUMBER OF INSTALLATION ANCHORS DEPICTED IS THE MINIMUM NUMBER OF ANCHORS TO BE USED FOR PRODUCT INSTALLATION.
3. INSTALL INDIVIDUAL INSTALLATION ANCHORS WITHIN A TOLERANCE OF ±1/16 INCH OF THE DEPICTED LOCATION IN THE ANCHOR LAYOUT DETAIL (I.E., WITHOUT CONSIDERATION OF TOLERANCES). TOLERANCES ARE NOT CUMULATIVE FROM ONE INSTALLATION ANCHOR TO THE NEXT.
4. SHIM AS REQUIRED AT EACH INSTALLATION ANCHOR WITH LOAD BEARING SHIM(S). MAXIMUM ALLOWABLE SHIM STACK TO BE 1/4 INCH. SHIM WHERE SPACE OF 1/16 INCH OR GREATER OCCURS. SHIM(S) SHALL BE CONSTRUCTED OF HIGH DENSITY PLASTIC OR BETTER.
5. FOR INSTALLATION INTO WOOD FRAMING USE #14 WOOD SCREWS OF SUFFICIENT LENGTH TO ACHIEVE 2 INCH MINIMUM EMBEDMENT INTO WOOD SUBSTRATE WITH MINIMUM 1 INCH EDGE DISTANCE.
6. FOR INSTALLATION THROUGH 1X BUCK TO CONCRETE/MASONRY, OR DIRECTLY INTO CONCRETE/MASONRY, USE 1/4 INCH DIAMETER ITW TAPCONS OF SUFFICIENT LENGTH TO ACHIEVE 1 3/4 INCH MINIMUM EMBEDMENT AND WITH MINIMUM 2-1/2 INCH EDGE DISTANCE.
7. FOR INSTALLATION INTO 33 KSI STEEL STUD USE 1/4-14 TEK SCREWS (GRADE 5) OF SUFFICIENT LENGTH TO ACHIEVE THREE (3) THREADS MINIMUM PENETRATION BEYOND THE METAL STRUCTURE.
8. MINIMUM EMBEDMENT AND EDGE DISTANCE EXCLUDE WALL FINISHES, INCLUDING BUT NOT LIMITED TO STUCCO, FOAM, BRICK VENEER, AND SIDING.
9. INSTALLATION ANCHORS AND ASSOCIATED HARDWARE MUST BE MADE OF CORROSION RESISTANT MATERIAL OR HAVE A CORROSION RESISTANT COATING.
10. FOR GROUT FILLED BLOCK, DO NOT INSTALL INSTALLATION ANCHORS INTO MORTAR JOINTS. EDGE DISTANCE IS MEASURED FROM FREE EDGE OF BLOCK OR EDGE OF MORTAR JOINT INTO FACE SHELL OF BLOCK.
11. INSTALLATION ANCHORS SHALL BE INSTALLED IN ACCORDANCE WITH ANCHOR MANUFACTURER'S INSTALLATION INSTRUCTIONS, AND ANCHORS SHALL NOT BE USED IN SUBSTRATES WITH STRENGTHS LESS THAN THE MINIMUM STRENGTH SPECIFIED IN THIS APPROVAL.
12. INSTALLATION ANCHOR CAPACITIES FOR PRODUCTS HEREIN ARE BASED ON SUBSTRATE MATERIALS WITH THE FOLLOWING PROPERTIES:
    A. WOOD - MINIMUM SPECIFIC GRAVITY OF 0.42.
    B. CONCRETE -MINIMUM COMPRESSIVE STRENGTH OF 2700 PSI.
    C. GROUT-FILLED CMU- UNIT STRENGTH CONFORMS TO ASTM C-90 AND GROUT CONFORMS TO ASTM C 476, MINIMUM GROUT COMPRESSIVE STRENGTH OF 2000 PSI.
    D. STEEL - MINIMUM YIELD STRENGTH OF 33 KSI. MINIMUM WALL THICKNESS OF 33 MILS (20 GAUGE OR 0.033 IN.) MUST BE DESIGNED TO ADEQUATELY TRANSFER LOADS APPLIED.
13. THRESHOLD/SILL INSTALLATION: FLUSH GUIDE SILL (DETAIL D/5) & LOW-RISE SILL (DETAIL K/6) ARE LIMITED TO INSTALLATIONS AS SHOWN ON SHEET 11 INTO WOOD OR CONCRETE SUBSTRATES.

GENERAL NOTES:

1. THE PRODUCT SHOWN HEREIN IS DESIGNED AND MANUFACTURED TO COMPLY WITH THE 2006 IRC/IBC, THE 2006 TEXAS REVISIONS, EFFECTIVE JANUARY 1, 2008, AND HAS BEEN EVALUATED ACCORDING TO THE FOLLOWING:
    - ASTM E 283-04
    - ASTM E 330-02
    - ASTM E 331-00
    - ASTM E 1886-05
    - ASTM E 1996-05
2. ADEQUACY OF THE EXISTING STRUCTURAL CONCRETE/MASONRY AND 2X FRAMING AS A MAIN WIND FORCE RESISTING SYSTEM CAPABLE OF WITHSTANDING AND TRANSFERRING APPLIED PRODUCT LOADS TO THE FOUNDATION IS THE RESPONSIBILITY OF THE ENGINEER OR ARCHITECT OF RECORD FOR THE PROJECT OF INSTALLATION.
3. 1X AND 2X BUCKS (WHEN USED) SHALL BE DESIGNED AND ANCHORED TO PROPERLY TRANSFER ALL LOADS TO THE STRUCTURE. BUCK DESIGN AND INSTALLATION IS THE RESPONSIBILITY OF THE ENGINEER OR ARCHITECT OF RECORD FOR THE PROJECT OF INSTALLATION.
4. THE INSTALLATION DETAILS DESCRIBED HEREIN ARE GENERIC AND MAY NOT REFLECT ACTUAL CONDITIONS FOR A SPECIFIC SITE. IF SITE CONDITIONS CAUSE INSTALLATION TO DEVIATE FROM THE REQUIREMENTS DETAILED HEREIN, A LICENSED ENGINEER OR ARCHITECT SHALL PREPARE SITE SPECIFIC DOCUMENTS FOR USE WITH THIS DOCUMENT. FOR NON-HVHZ AREA, INSTALLATION TO BE REVIEWED BY AHJ (AUTHORITY HAVING JURISDICTION).
5. APPROVED IMPACT PROTECTIVE SYSTEM **IS NOT REQUIRED** ON THIS PRODUCT IN AREAS REQUIRING IMPACT RESISTANCE.
6. DOOR FRAME MATERIAL: ALUMINUM 6063-T5
7. GLASS MEETS THE REQUIREMENTS OF ASTM E 1300-04 GLASS CHARTS. SEE SHEET 11 FOR GLAZING DETAILS.
8. SILICONE SEALANT TO BE APPLIED BETWEEN GLASS AND FRAME AND BETWEEN FRAME CORNERS AND PANEL CORNERS.
9. FOR INSTALLATION OF LOW-RISE AND FLUSH SILL 2X8 WOOD BUCK OR CONCRETE MUST BE RECESSED AND/OR ROUTED TO ACCOMMODATE THESE COMPONENTS PRIOR TO INSTALLATION.

TABLE OF CONTENTS

SHEET	REVISION	SHEET DESCRIPTION
1	-	INSTALLATION & GENERAL NOTES
2	-	ELEVATION & ANCHOR LAYOUT
3	-	ELEVATION & ANCHOR LAYOUT
4	-	ELEVATION & ANCHOR LAYOUT
5	-	VERTICAL SECTIONS
6	-	HORIZONTAL SECTIONS
7	-	HORIZONTAL SECTIONS
8	-	COMPONENTS & BILL OF MATERIALS
9	-	COMPONENTS
10	-	CORNER DETAILS & CONFIGURATIONS
11	-	INSTALLATION PREPARATION & GLAZING DETAILS

DESIGN PRESSURE RATING			
GLAZE TYPE	DESIGN PRESSURE		MISSILE IMPACT RATING
1 - 4	+55.0 / -55.0 PSF	W/ WATER INFILTRATION (STANDARD SILL ONLY)	LARGE AND SMALL MISSILE IMPACT RATED
	+70.0 / -70.0 PSF*	W/O WATER INFILTRATION (STANDARD, FLUSH, & LOW RISE SILL)	

*UNIT SHALL BE INSTALLED AT LOCATION PROTECTED BY OVERHANG SUCH THE OVERHANG RATIO (OH) = OH LENGTH/OH HEIGHT GREATER THAN 1.0 WHERE WATER INFILTRATION IS REQUIRED.

LANAI DOORS™
COASTAL INNOVATIVE PRODUCTS
941 NORTH ELM STREET, STE. C
ORANGE, CA 92867
PH: (714) 744-6020 FX: (714) 744-6030

TITLE: E3 HURRICANE BIFOLD DOOR
INSTALLATION & GENERAL NOTES

PREPARED BY:
BUILDING DROPS
127 W. FAIRBANKS AVE., STE. 438
WINTER PARK, FL 32789
PH: (407) 644-6957 FX: (407) 644-2366

REVISIONS

NO.	DESCRIPTION	BY	DATE

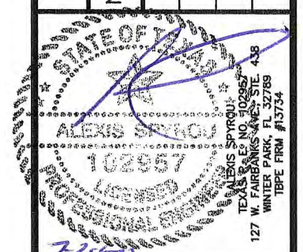

DATE: 11.07.11
DWN BY: JLA
CHK BY: HFN
SCALE: NTS

DWG #: CIP003

SHEET: 1 OF 11

7/4/2012 7:47 AM

s:\projects\coastal innovative products\tdl-p-10-0414 (lanai doors)\dwgs\cip003.dwg

CONFIGURATION

3L3R (OUT-FOLDING)

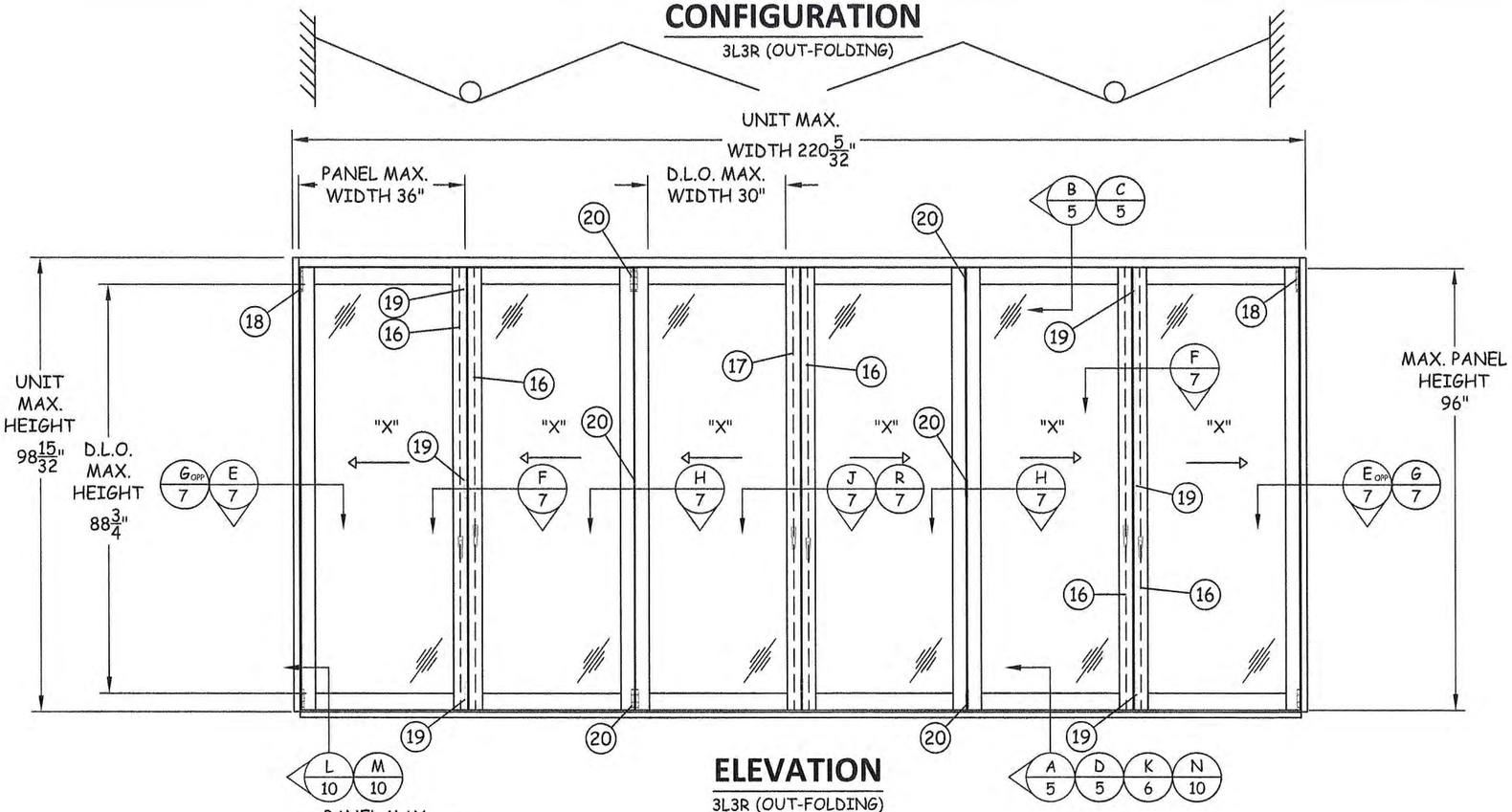

ELEVATION

3L3R (OUT-FOLDING)

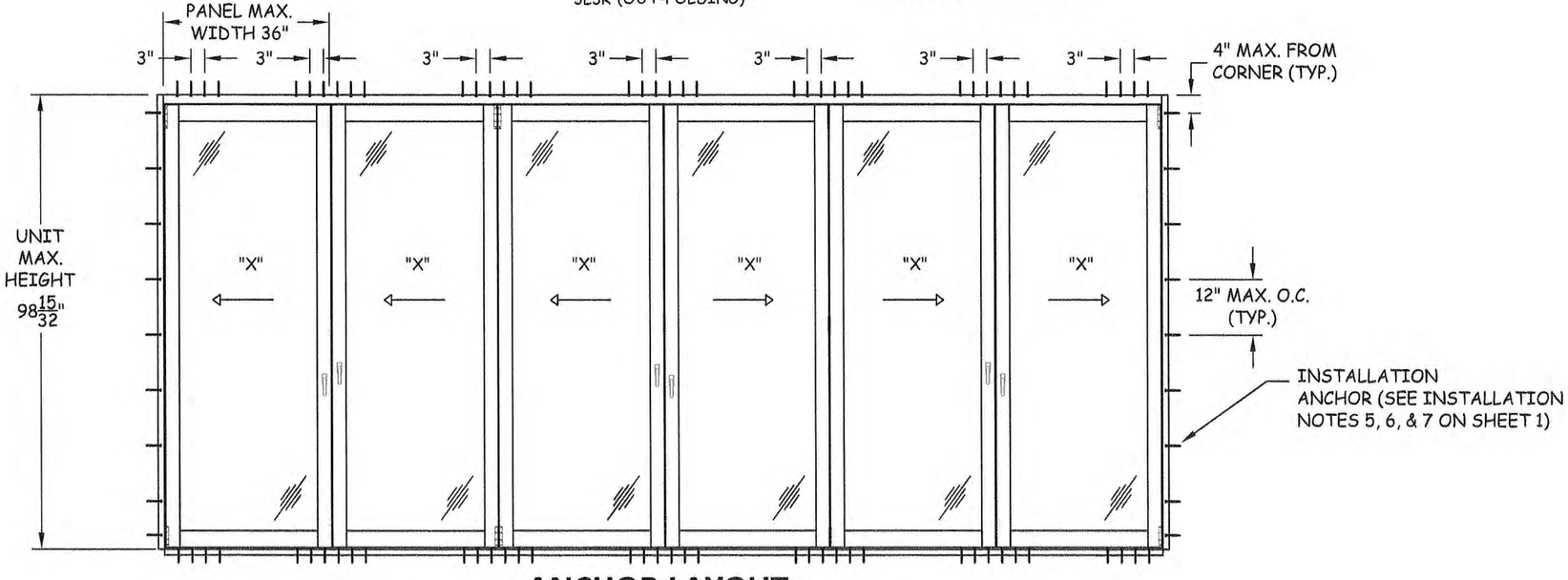

ANCHOR LAYOUT

3L3R (OUT-FOLDING)

LANAI DOORS
COASTAL INNOVATIVE PRODUCTS
941 NORTH ELM STREET, STE. C
ORANGE, CA 92867
PH: (714) 744-6020 FX: (714) 744-6030

TITLE: E3 HURRICANE BIFOLD DOOR ELEVATIONS & ANCHOR LAYOUTS

PREPARED BY:
BUILDING DROPS
127 W. FAIRBANKS AVE., STE. 438
WINTER PARK, FL 32789
PH: (407) 644-6957 FX: (407) 644-2366

REVISIONS

NO.	DESCRIPTION	BY	DATE

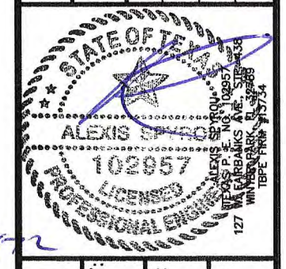

DATE:	DWN BY:	CHK BY:	SCALE:
11.07.11	JLA	HFN	NTS

DWG #: CIP003

SHEET: 2 OF 11

CONFIGURATION

2L4R

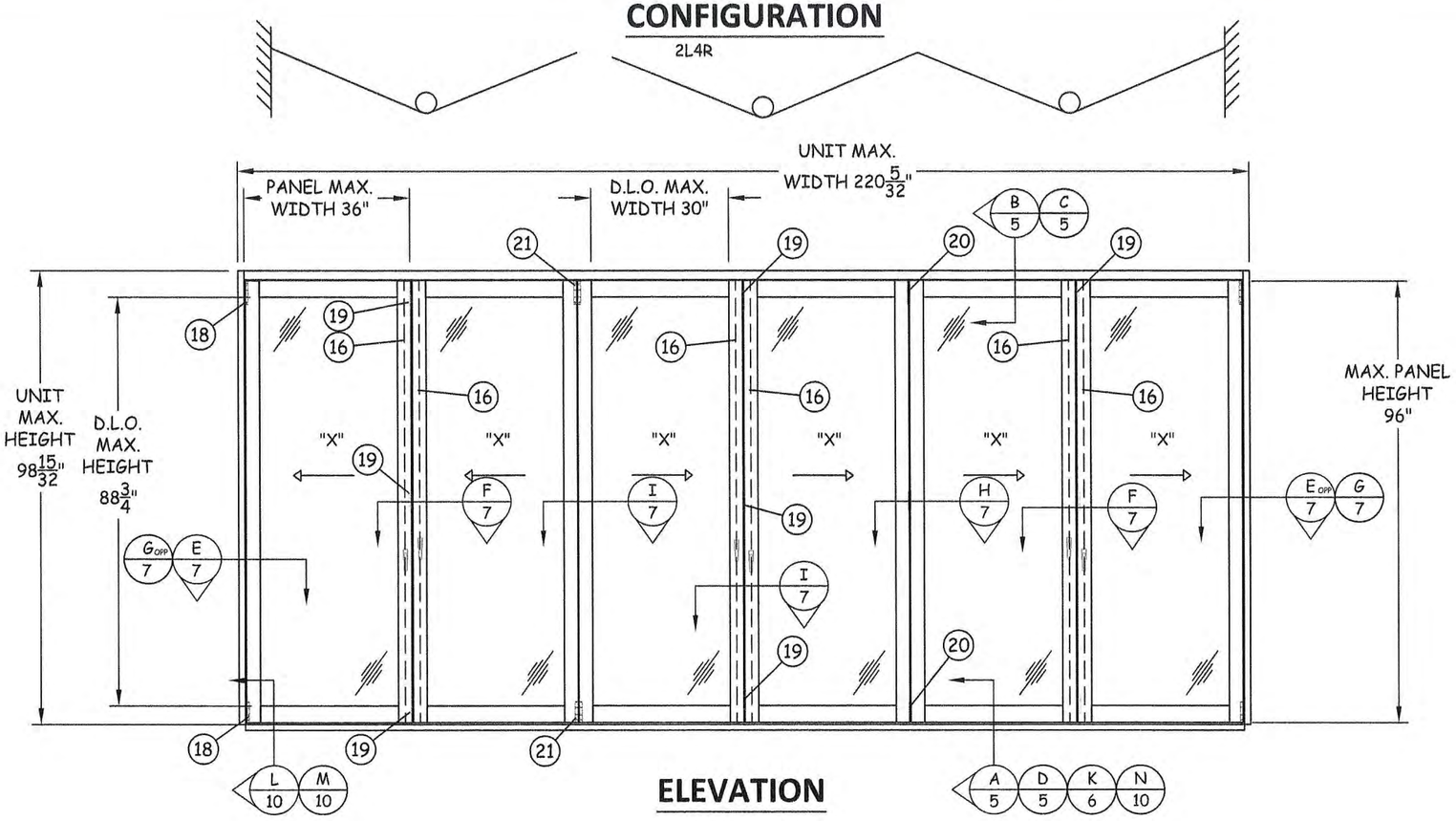

ELEVATION

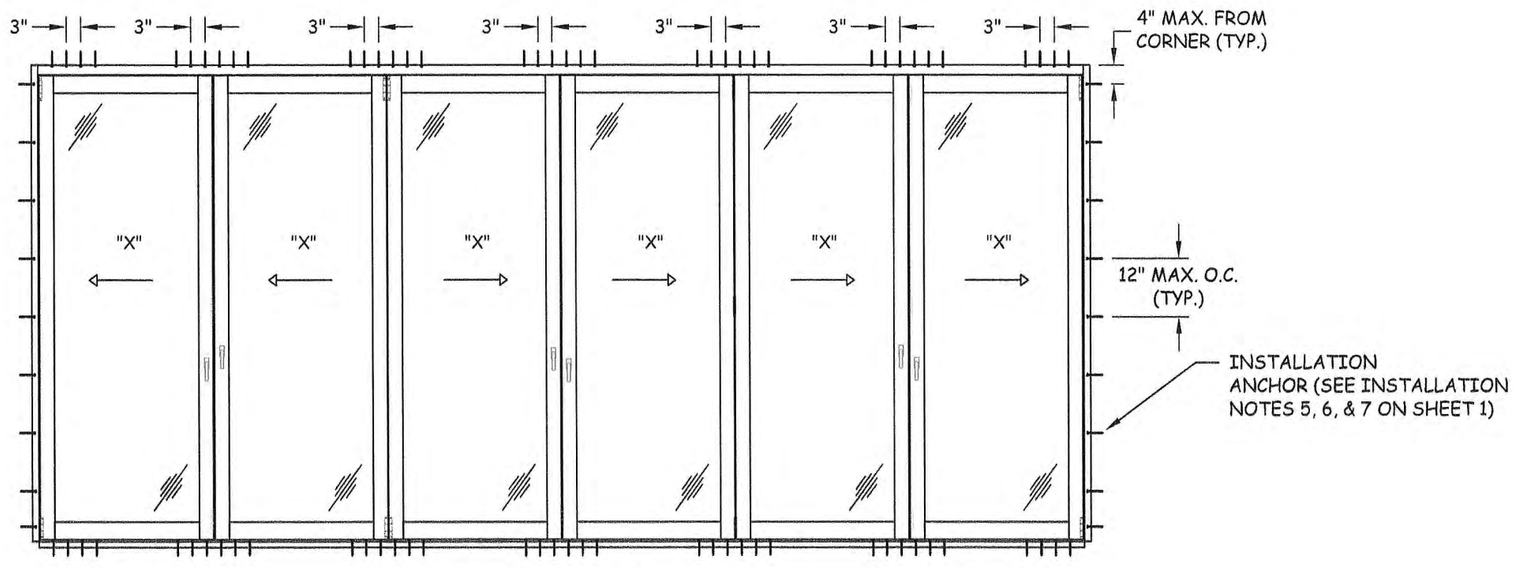

ANCHOR LAYOUT

LANAI DOORS™
BRINGING THE OUTDOORS IN
COASTAL INNOVATIVE PRODUCTS
941 NORTH ELM STREET, STE. C
ORANGE, CA 92867
PH: (714) 744-6020 FX: (714) 744-6030

TITLE:
E3 HURRICANE BIFOLD DOOR
ELEVATIONS & ANCHOR LAYOUTS

PREPARED BY:
BUILDING DROPS
127 W. FAIRBANKS AVE., STE. 438
WINTER PARK, FL 32789
PH: (407) 644-6957 FX: (407) 644-2366

REVISIONS

NO.	DESCRIPTION	BY	DATE

STATE OF TEXAS
ALEXIS SPYROU
102957
LICENSED
PROFESSIONAL ENGINEER
7-24-12

ALEXIS SPYROU
TEXAS P. E. NO. 102957
127 W. FAIRBANKS AVE., STE. 438
WINTER PARK, FL 32789
TBPE FIRM #13734

DATE: 11.07.11	DWN BY: JLA	CHK BY: HFN	SCALE: NTS

DWG #: CIP003

SHEET: 3 OF 11

CONFIGURATION
6R (OUT-FOLDING)

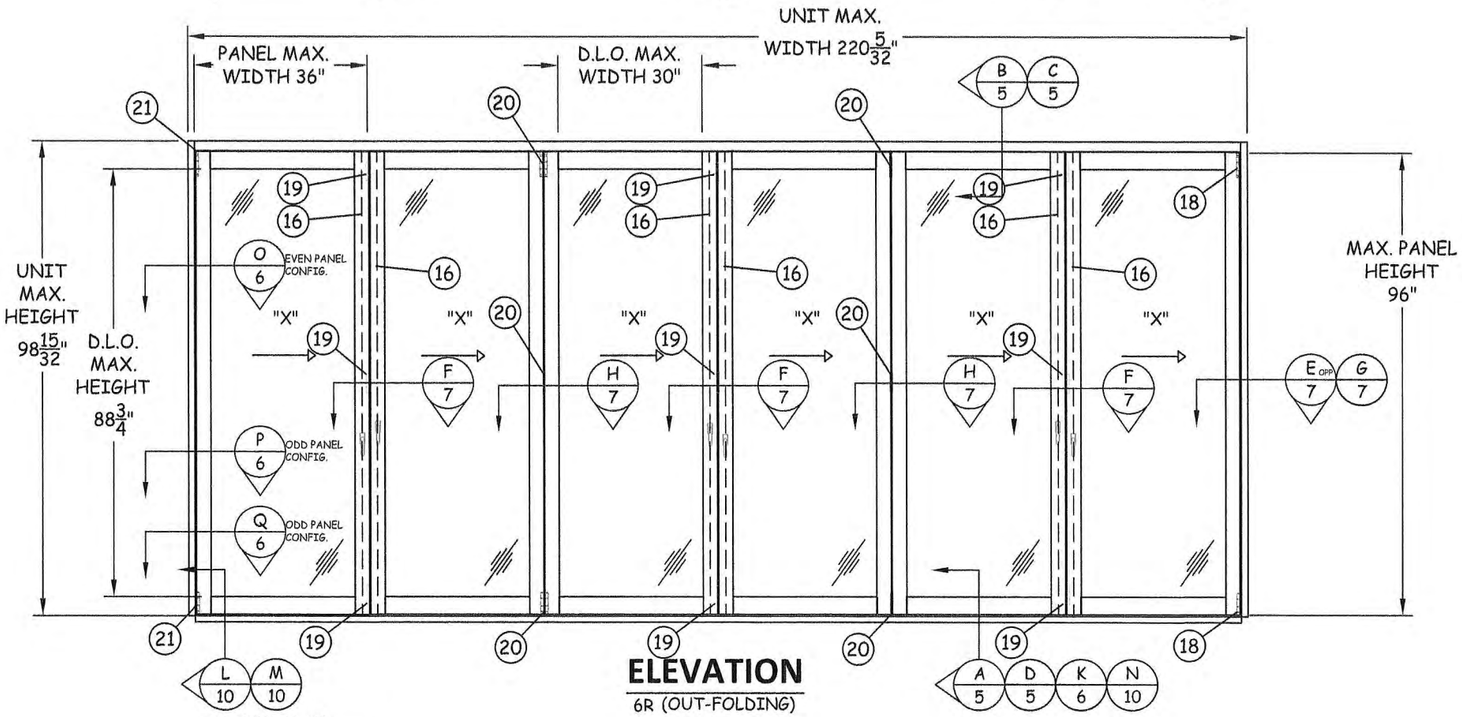

ELEVATION
6R (OUT-FOLDING)

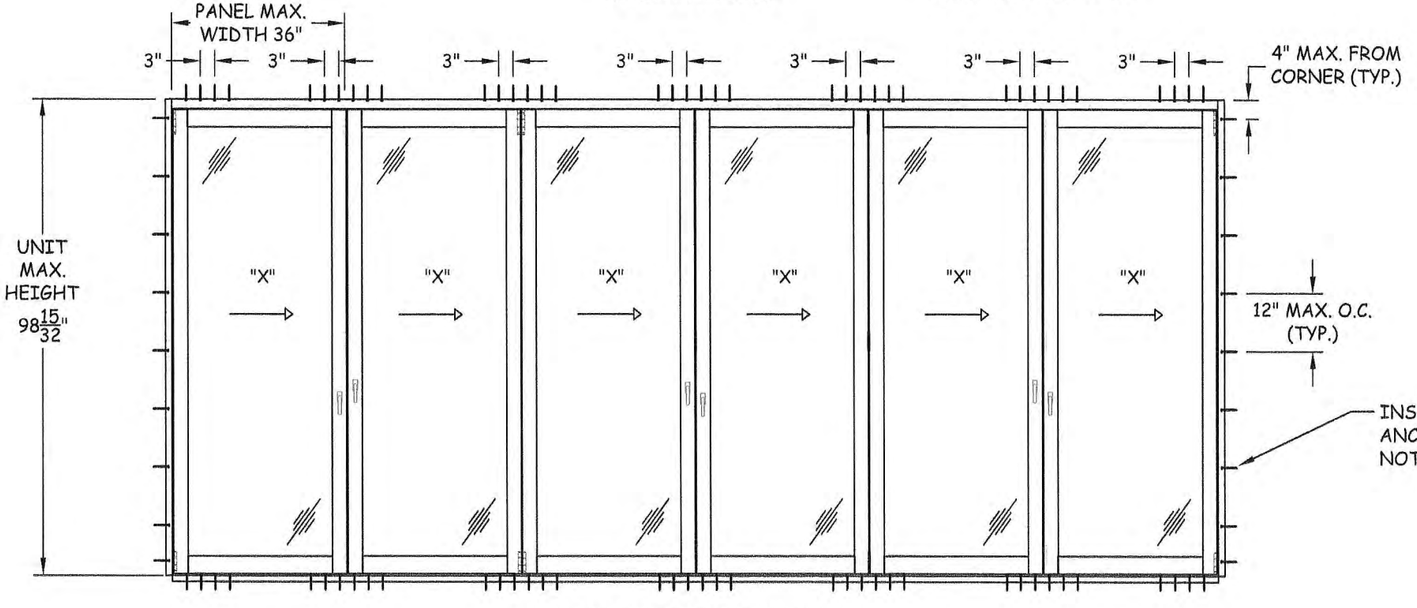

ANCHOR LAYOUT
6R (OUT-FOLDING)

LANAI DOORS
BRINGS THE OUTDOORS IN
COASTAL INNOVATIVE PRODUCTS
941 NORTH ELM STREET, STE. C
ORANGE, CA 92867
PH: (714) 744-6020 FX: (714) 744-6030

TITLE: E3 HURRICANE BIFOLD DOOR ELEVATIONS & ANCHOR LAYOUTS

PREPARED BY:
BUILDING DROPS
127 W. FAIRBANKS AVE., STE. 438
WINTER PARK, FL 32789
PH: (407) 644-6957 FX: (407) 644-2366

REVISIONS

NO.	DESCRIPTION	BY	DATE

STATE OF FLORIDA
ALEXIS SCHROU
102957
LICENSED PROFESSIONAL ENGINEER
7-6-12

DATE:	DWN BY:	CHK BY:	SCALE:
11.07.11	JLA	HFN	NTS

DWG #: CIP003

SHEET: 4 OF 11

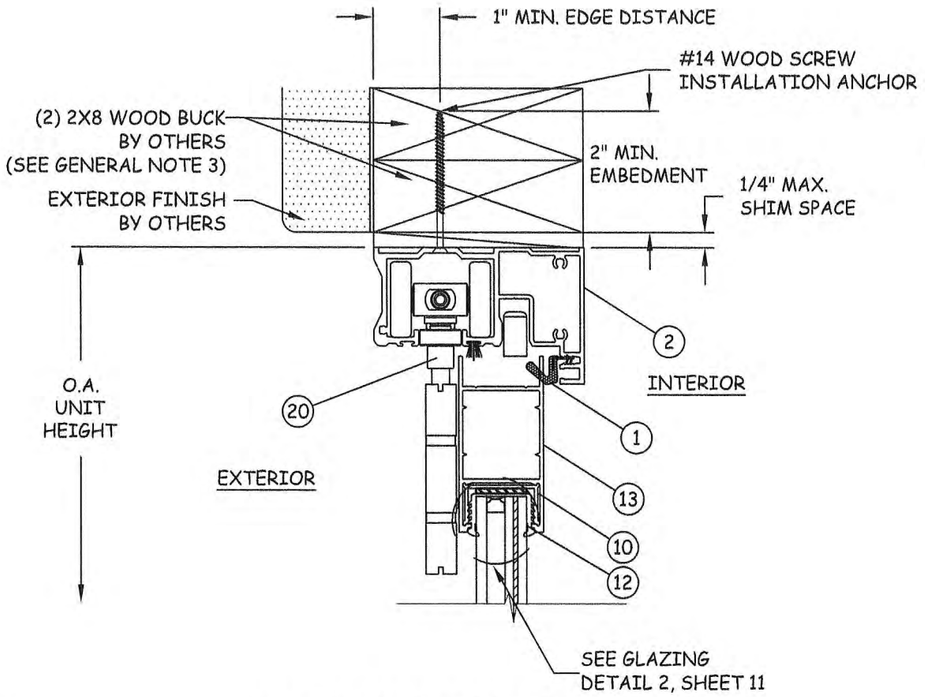

MAX UNIT HEIGHT 98-15/32"

B/5 VERTICAL SECTION

HEAD - 2X WOOD FRAME

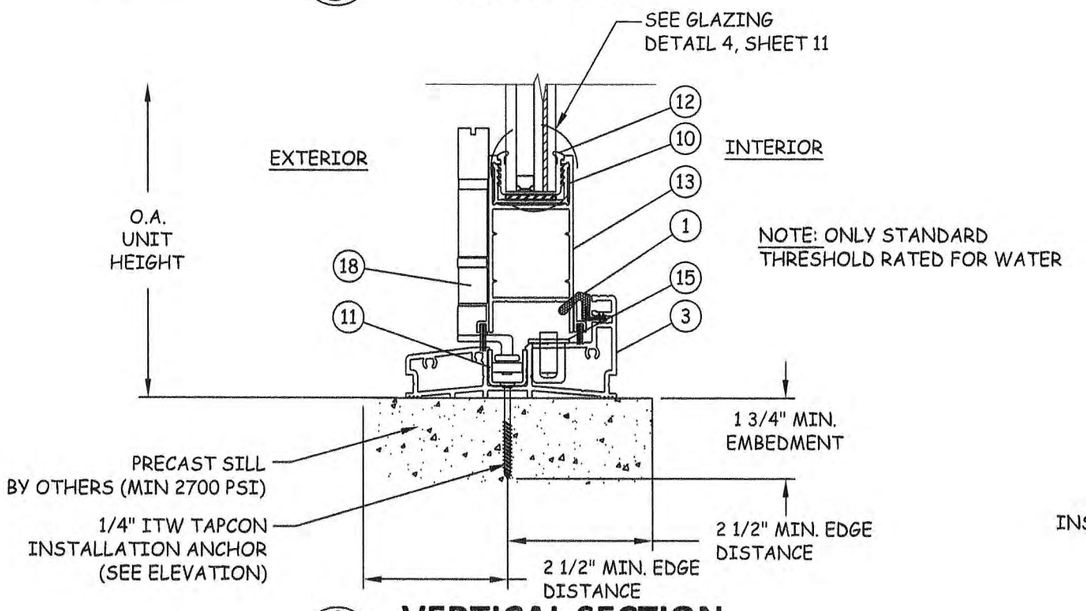

A/5 VERTICAL SECTION

SILL - CONCRETE/MASONRY
STANDARD THRESHOLD

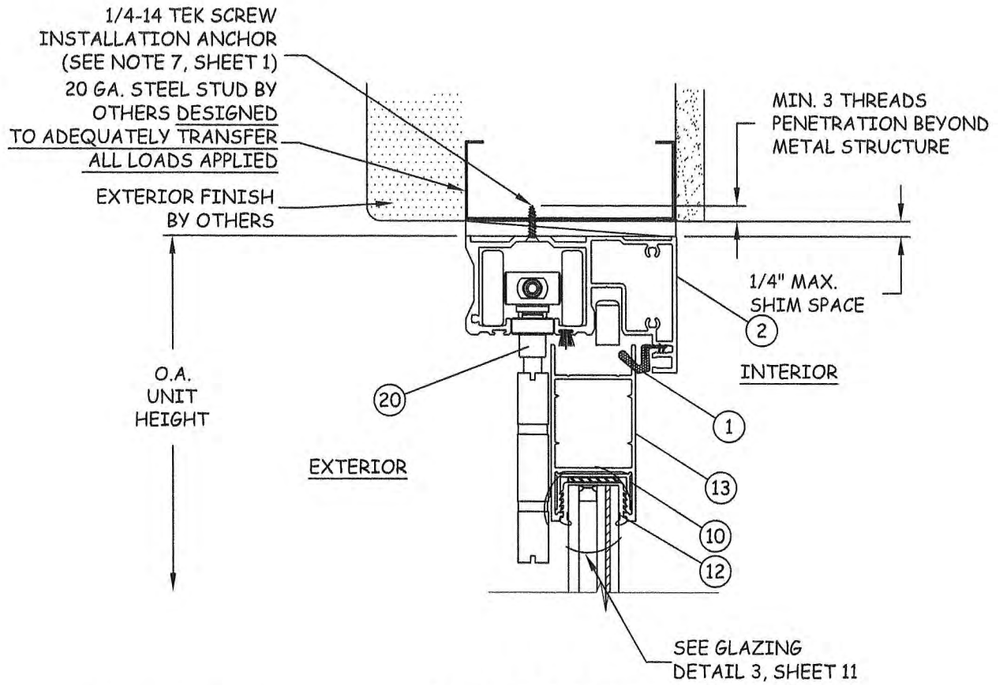

MAX UNIT HEIGHT 98-15/32"

C/5 VERTICAL SECTION

HEAD - STEEL STUD

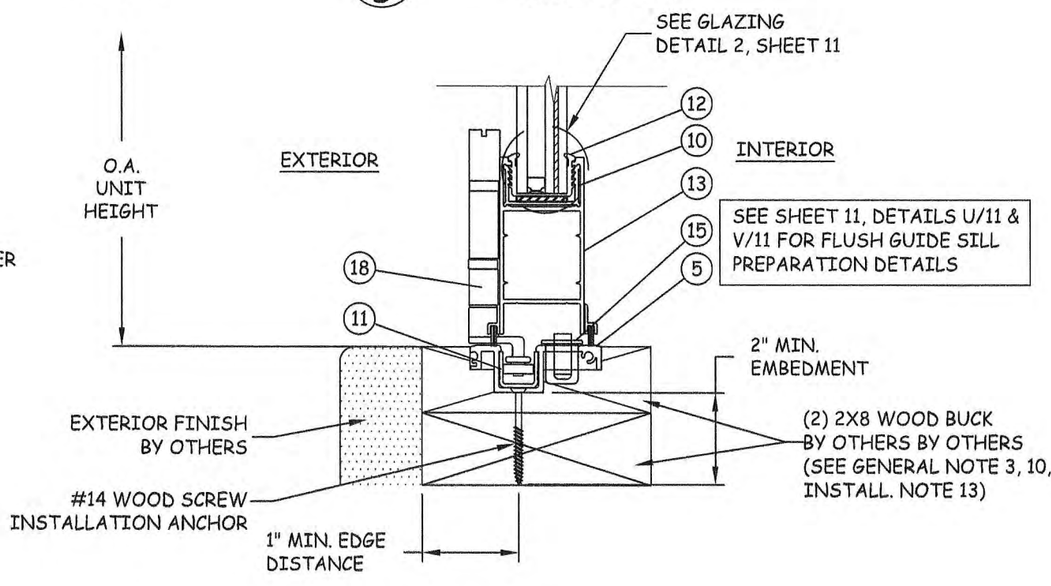

D/5 VERTICAL SECTION

SILL - 2X WOOD FRAME
FLUSH GUIDE THRESHOLD

LANAI DOORS
COASTAL INNOVATIVE PRODUCTS
941 NORTH ELM STREET, STE. C
ORANGE, CA 92867
PH: (714) 744-6020 FX: (714) 744-6030

TITLE: E3 HURRICANE BIFOLD DOOR
VERTICAL SECTIONS

PREPARED BY:
BUILDING DROPS
127 W. FAIRBANKS AVE., STE. 438
WINTER PARK, FL 32789
PH: (407) 644-6957 FX: (407) 644-2366

REVISIONS

NO.	DESCRIPTION	BY	DATE

STATE OF FLORIDA
ALEXIS SPYROU
102957
LICENSED
PROFESSIONAL ENGINEER
7-24-12

DATE:	DWN BY:	CHK BY:	SCALE:
11.07.11	JLA	HFN	NTS

DWG #: CIP003

SHEET: 5 OF 11

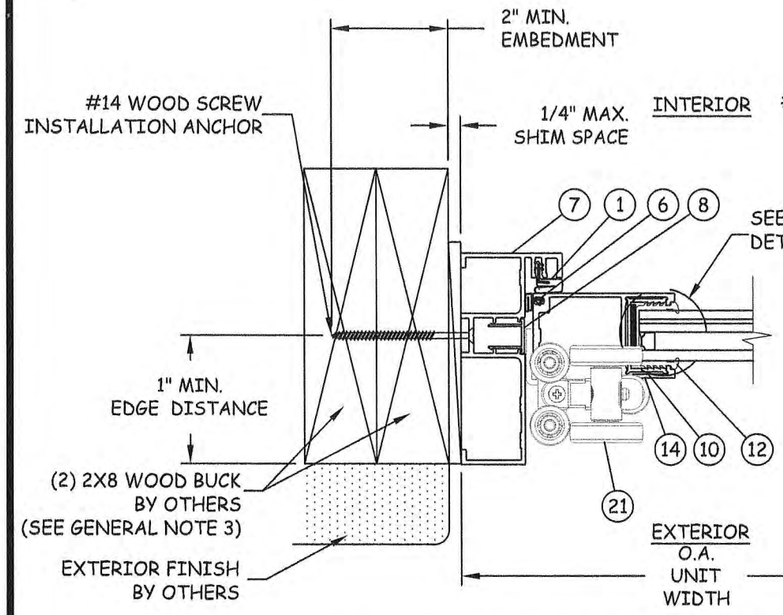

O/6 HORIZONTAL SECTION

JAMB - 2X WOOD FRAME

END CARRIER TO JAMB
(ONLY ON EVEN NUMBER CONFIGURATIONS, SEE SCHEDULE SHEET 10)

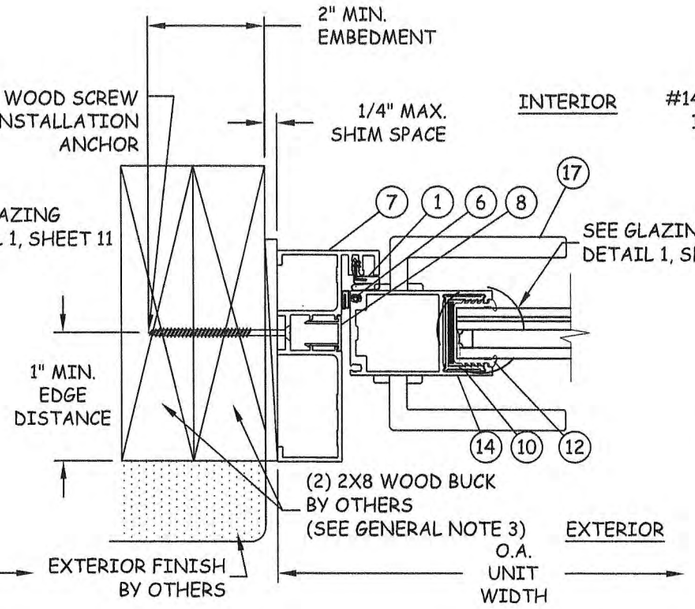

P/6 HORIZONTAL SECTION

JAMB - 2X WOOD FRAME

MULTI POINT LOCK TO JAMB
(ONLY ON ODD NUMBER CONFIGURATIONS,
SEE SCHEDULE SHEET 10)

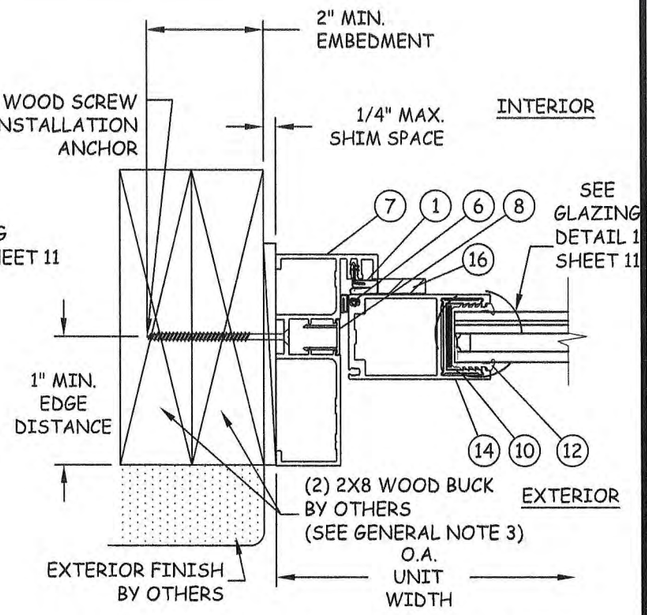

Q/6 HORIZONTAL SECTION

JAMB W/ 2-PT. LOCK - 2X WOOD FRAME

TWIN BOLT LOCK TO JAMB
(ONLY ON ODD NUMBER CONFIGURATIONS,
SEE SCHEDULE SHEET 10)

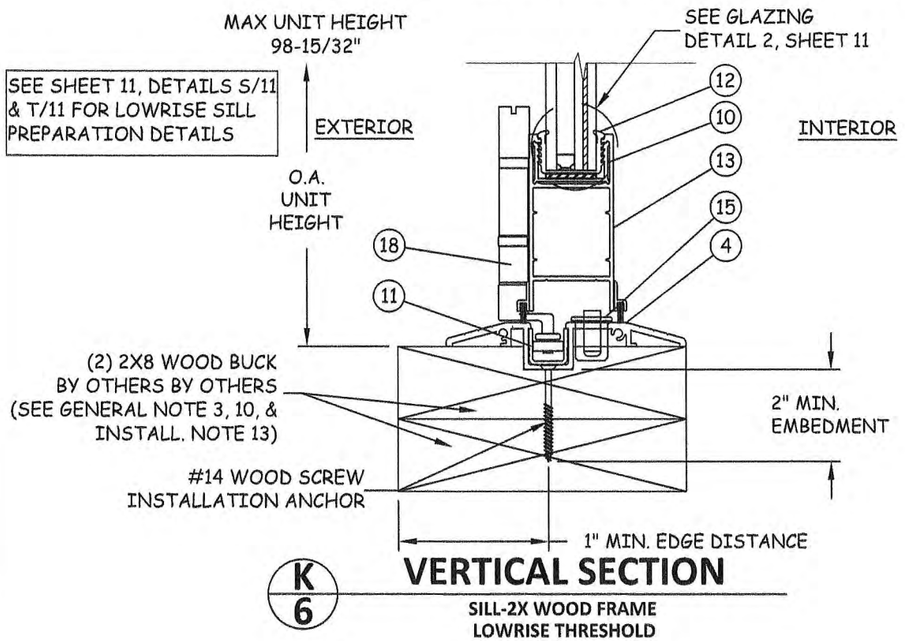

K/6 VERTICAL SECTION

SILL-2X WOOD FRAME
LOWRISE THRESHOLD

LANAI DOORS
COASTAL INNOVATIVE PRODUCTS
941 NORTH ELM STREET, STE. C
ORANGE, CA 92867
PH: (714) 744-6020 FX: (714) 744-6030

TITLE: E3 HURRICANE BIFOLD DOOR
HORIZONTAL SECTIONS
& GLAZING DETAILS

PREPARED BY:
BUILDING DROPS
127 W. FAIRBANKS AVE., STE. 438
WINTER PARK, FL 32789
PH: (407) 644-6957 FX: (407) 644-2366

REVISIONS

NO.	DESCRIPTION	BY	DATE

STATE OF TEXAS
ALEXIS SPYROU
102957
LICENSED
PROFESSIONAL ENGINEER
7-24-12

DATE:	DWN BY:	CHK BY:	SCALE:
11.07.11	JLA	HFN	NTS

DWG #: CIP003

SHEET: 6 OF 11

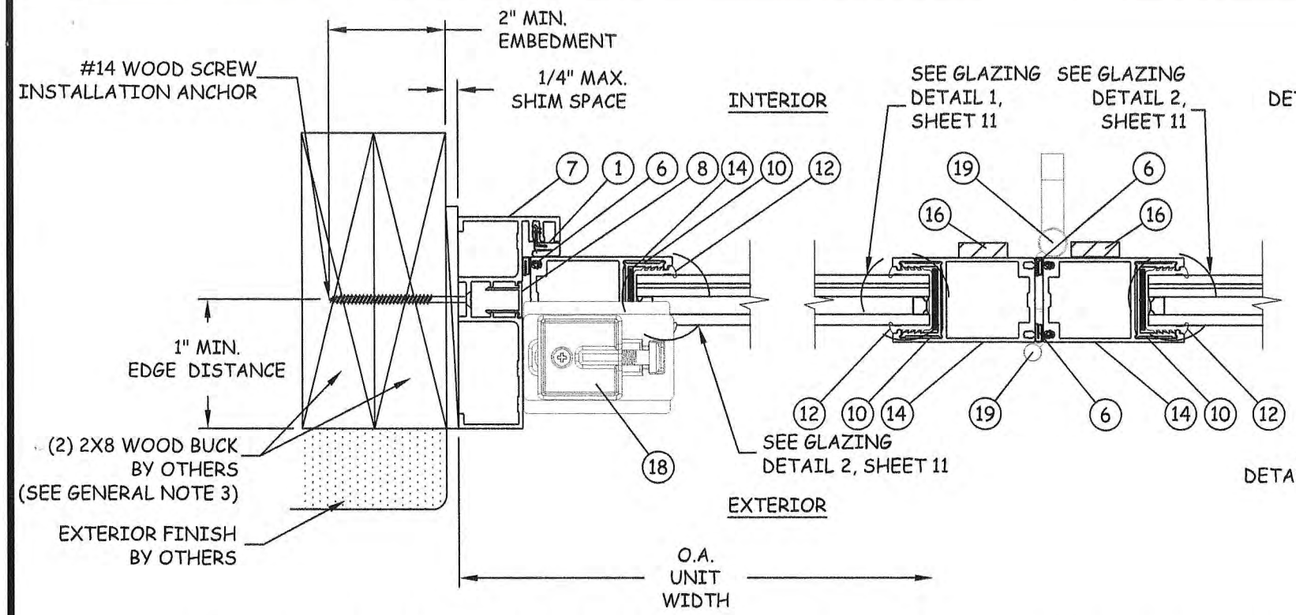

E/7 **HORIZONTAL SECTION**
JAMB - 2X WOOD BUCK

F/7 **HORIZONTAL SECTION**
HHS/HS & TWIN BOLTS

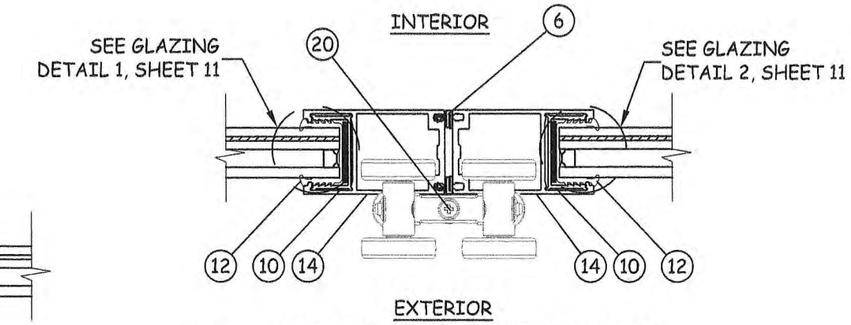

H/7 **HORIZONTAL SECTION**
ICS

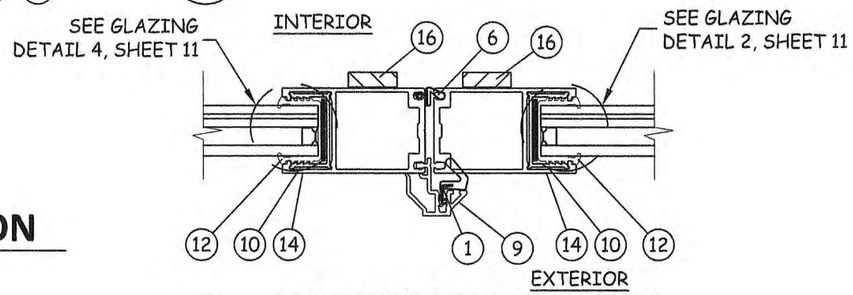

R/7 **HORIZONTAL SECTION**
DOUBLE TWIN BOLT

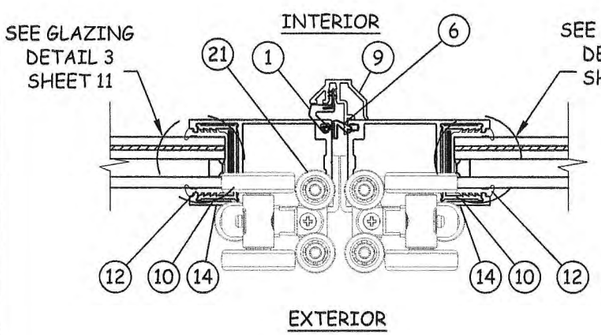

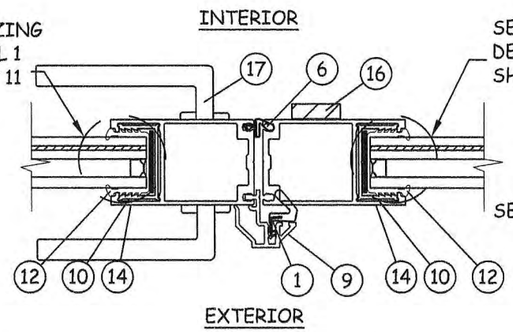

J/7 **HORIZONTAL SECTION**
4 POINT DOOR HANDLE & TWIN BOLT

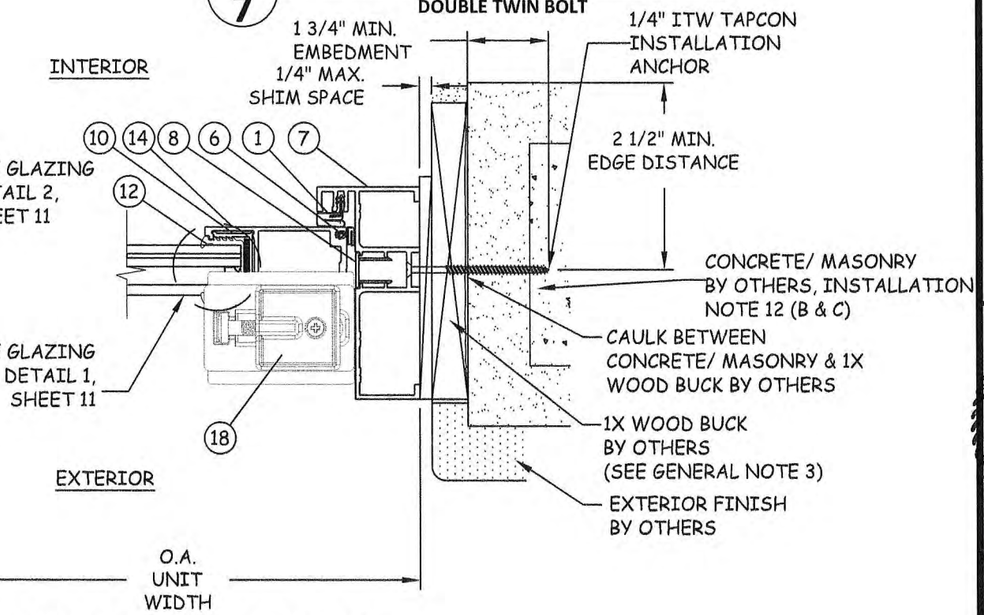

I/7 **HORIZONTAL SECTION**
RCS/LCS

G/7 **HORIZONTAL SECTION**
JAMB - CONCRETE/MASONRY

LANAI DOORS
COASTAL INNOVATIVE PRODUCTS
941 NORTH ELM STREET, STE. C
ORANGE, CA 92867
PH: (714) 744-6020 FX: (714) 744-6030

TITLE: E3 HURRICANE BIFOLD DOOR
HORIZONTAL SECTIONS

PREPARED BY:
BUILDING DROPS
127 W. FAIRBANKS AVE., STE. 438
WINTER PARK, FL 32789
PH: (407) 644-6957 FX: (407) 644-2366

REVISIONS

NO.	DESCRIPTION	BY	DATE

STATE OF TEXAS
ALEXIS SPYROU
102957
LICENSED
PROFESSIONAL ENGINEER
7-24-11

DATE: 11.07.11	DWN BY: JLA	CHK BY: HFN	SCALE: NTS

DWG #: CIP003

SHEET: 7 OF 11

BILL OF MATERIALS				
ITEM NO.	DESCRIPTION	PART NUMBER	MATERIAL	MANUFACTURER
1	DOOR SEAL	QEBD 650	Q-LON	SCHLEGEL
2	HEADER		AL. 6063-T5	COASTAL INNOVATIVE PRODUCTS
3	STD. THRESHOLD		AL. 6063-T5	COASTAL INNOVATIVE PRODUCTS
4	LOWRISE THRESHOLD		AL. 6063-T5	COASTAL INNOVATIVE PRODUCTS
5	FLUSH GUIDE THRESHOLD		AL. 6063-T5	COASTAL INNOVATIVE PRODUCTS
6	WETAHERSEAL	QWS-DH1	Q-LON	SCHLEGEL
7	JAMB		AL. 6063-T5	COASTAL INNOVATIVE PRODUCTS
8	JAMB COVER		AL. 6063-T5	COASTAL INNOVATIVE PRODUCTS
9	ASTRAGAL		AL. 6063-T5	COASTAL INNOVATIVE PRODUCTS
10	GLAZING CLIP		AL. 6063-T5	COASTAL INNOVATIVE PRODUCTS
11	THRESHOLD INSERT		RIGID PVC	COASTAL INNOVATIVE PRODUCTS
12	DRY GLAZING GASKET		SANTOPRENE 101-64 TPV/TPE DUROMETER=64	COASTAL INNOVATIVE PRODUCTS (RAW MATERIAL BY EXXON MOBIL CHEMICAL CO.)
13	DOOR RAIL		AL. 6063-T5	COASTAL INNOVATIVE PRODUCTS
14	DOOR STILE		AL. 6063-T5	COASTAL INNOVATIVE PRODUCTS
15	DOUBLE SHOOT BOLT CUPS		ZYTEL 70G33L NC010	
16	TWO PT. LOCK	TBL NL L/THROW	ZINC ALLOY	INTERLOCK
17	FOUR PT. LOCK	LCL 30R4PS	ZINC ALLOY	INTERLOCK
18	PIVOT	E3 CPS	STAINLESS STEEL	CENTOR
19	HINGES	E3 HS/ HHS/ HHNHS/ HNHS/ HHNH /HNH	STAINLESS STEEL	CENTOR
20	ICS	E3 CRCS/CLCS	STAINLESS STEEL	CENTOR
21	END CARRIER RCS/LCS	E3 CICS	STAINLESS STEEL	CENTOR
22	MIDRAIL		AL. 6063-T5	COASTAL INNOVATIVE PRODUCTS
23	0.295" I.G. SPACER	756	AL. 6063-0	HELIMA
24	0.335" I.G. SPACER	856	AL. 6063-0	HELIMA

1 FRAME SEAL
Q-LON

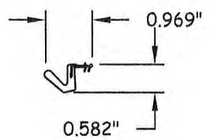

2 HEADER
AL. 6063-T5

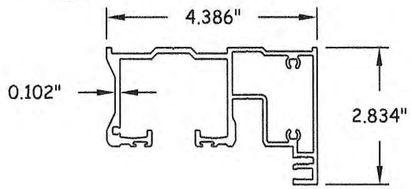

3 STANDARD THRESHOLD
AL. 6063-T5

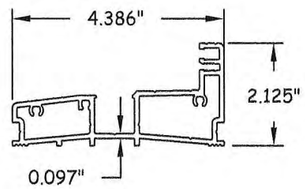

4 LOWRISE THRESHOLD
AL. 6063-T5

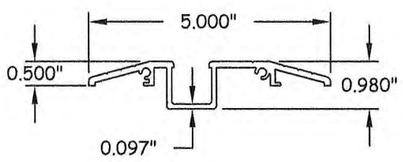

5 FLUSH GUIDE THRESHOLD
AL. 6063-T5

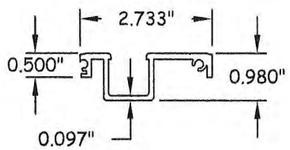

6 DOOR SEAL
Q-LON

7 JAMB
AL. 6063-T5

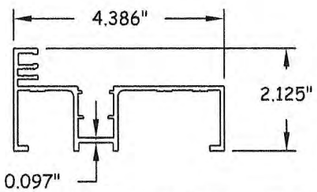

8 JAMB COVER
AL. 6063-T5

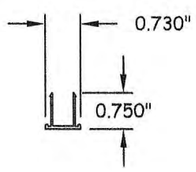

9 ASTRAGAL
AL. 6063-T5

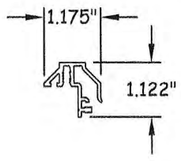

10 GLAZING CLIP
AL. 6063-T5

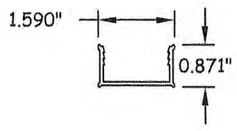

11 THRESHOLD INSERT
RIGID PVC

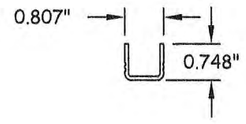

12 DRY GLAZING GASKET
SANTOPRENE 101-64

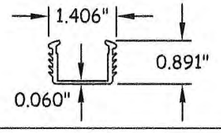

1. MIN. DUROMETER (SHORE A HARDNESS) = 64
2. MIN. TENSILE STRENGTH @ BREAK= 1020 PSI
3. COMPRESSION SET= 26%
4. TEAR STRENGTH= 131 LBF/IN
5. ELONGATION %= 340-463
6. SPECIFIC GRAVITY= MIN. 0.96

LANAI DOORS
BRINGING THE OUTDOORS IN
COASTAL INNOVATIVE PRODUCTS
941 NORTH ELM STREET, STE. C
ORANGE, CA 92867
PH: (714) 744-6020 FX: (714) 744-6030

TITLE: E3 HURRICANE BIFOLD DOOR
COMPONENTS & BILL OF MATERIALS

PREPARED BY:
BUILDING DROPS
127 W. FAIRBANKS AVE., STE. 438
WINTER PARK, FL 32789
PH: (407) 644-6957 FX: (407) 644-2366

REVISIONS

NO.	DESCRIPTION	BY	DATE

STATE OF TEXAS
ALEXIS SPYROU
102957
LICENSED
PROFESSIONAL ENGINEER
7-14-12

DATE:	DWN BY:	CHK BY:	SCALE:
11.07.11	JLA	HFN	NTS

DWG #: CIP003

SHEET: 8 OF 11

13 DOOR RAIL AL. 6063-T5

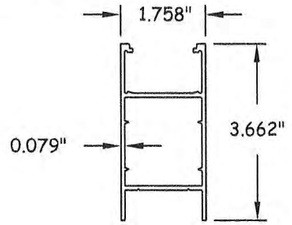

14 DOOR STILE AL. 6063-T5

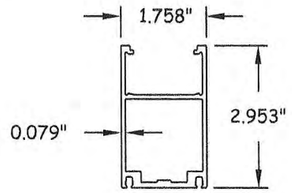

15 DOUBLE SHOOT BOLT CUPS ZYTEL 70G33L

16 TWO PT. LOCK ZINC ALLOY

17 FOUR PT. LOCK ZINC ALLOY

18 2- PIECE PIVOT SET STAINLESS STEEL

PIVOT SET

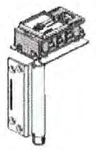

19 3-PIECE HINGE SET STAINLESS STEEL

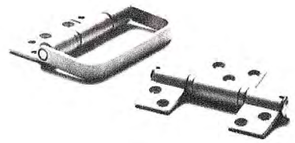

"D" HANDLE

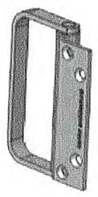

OFFSET HINGE SET

OFFSET HINGE NO HANDLE SET

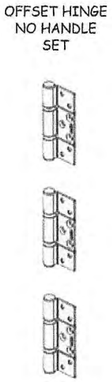

FLAT HINGE SET

FLAT HINGE NO HANDLE SET

20 3-PIECE ICS SET STAINLESS STEEL

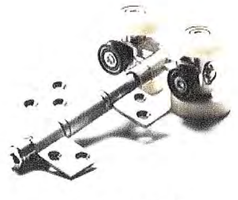

INTERMEDIATE CARRIER SET

21 2-PIECE SET END CARRIER (RCS/LCS) STAINLESS STEEL

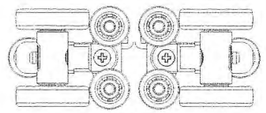

LEFT CARRIER SET

RIGHT CARRIER SET

22 MIDRAIL AL. 6063-T5

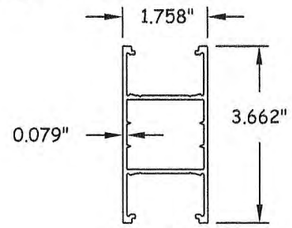

FOR OPTIONAL HIGH BOTTOM RAIL

23 0.295" I.G. SPACER AL. 6063-0

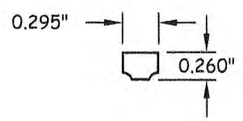

24 0.335" I.G. SPACER AL. 6063-0

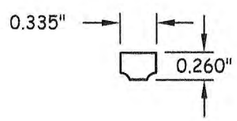

LANAI DOORS
BRINGING THE OUTDOORS IN
COASTAL INNOVATIVE PRODUCTS
941 NORTH ELM STREET, STE. C
ORANGE, CA 92867
PH: (714) 744-6020 FX: (714) 744-6030

TITLE: E3 HURRICANE BIFOLD DOOR COMPONENTS

PREPARED BY:
BUILDING DROPS
127 W. FAIRBANKS AVE., STE. 438
WINTER PARK, FL 32789
PH: (407) 644-6957 FX: (407) 644-2366

REVISIONS

NO.	DESCRIPTION	BY	DATE

STATE OF FLORIDA
ALEXIS SPYROU
102957
LICENSED
PROFESSIONAL ENGINEER
7-4-12
127 W. FAIRBANKS AVE. STE. 438 WINTER PARK, FL 32789
TBPE FIRM #13734

DATE:	DWN BY:	CHK BY:	SCALE:
11.07.11	JLA	HFN	NTS

DWG #: CIP003

SHEET: 9 OF 11

PANEL CT.	QUALIFIED CONFIGURATIONS						
1	1L	1R	-	-	-	-	-
2	1L1R	2L	2R	-	-	-	-
3	1L2R	2L1R	3L	3R	-	-	-
4	1L3R	3L1R	2L2R	4L	4R	-	-
5	1L4R	4L1R	2L3R	3L2R	5L	5R	-
6	1L5R	5R1L	2L4R	4R2L	3L3R	6L	6R

NOTES:

1. MAXIMUM PANEL SIZE: 36" X 96".
2. END PANEL HARDWARE:
   - A. ODD TO ODD PANELS (I.E. 3L3R CONFIG.)- REQUIRE 4-PT LOCK (ITEM 17) OR 2-PT LOCK (ITEM 16) ON ACTION PANEL (#3L OR #3R) AND 2-PT LOCK (ITEM 16) ON THE STRIKE-PLATE PANEL (#3R OR #3L)
   - B. ODD TO EVEN PANELS (I.E. 3L2R CONFIG.)- REQUIRE 4-PT LOCK (ITEM 17) OR 2-PT LOCK (ITEM 16) ON ACTION PANEL (#3L) AND ONE END CARRIER (ITEM 21) (#2R)
   - C. EVEN TO EVEN PANELS (I.E. 2L4R CONFIG.) - REQUIRE ONE END CARRIER (ITEM 21) ON BOTH PANELS (#2L AND #4R);
   - D. ODD PANEL INTO JAMB (I.E. 5L CONFIG.) - REQUIRE EITHER 4-PT LOCK (ITEM 17) OR 2-PT LOCK (ITEM 16) ON ACTION PANEL (#5L)
   - E. EVEN PANEL INTO JAMB (I.E. 6L) - REQUIRE ONE END CARRIER (ITEM 21) (#6L)
3. HINGED JOINT PANELS - ALL HINGED PANELS REQUIRE THREE HINGES (ITEM 19) AND TWO 2-PT LOCKS (ITEM 16)
4. CARRIER JOINT PANELS - ALL EVEN NUMBERED PANELS REQUIRE AN ICS (ITEM 20)AT THE TOP OF THE PANEL, A HINGE (ITEM 20) IN THE CENTER AND A CONCEALED INTERMEDIATE GUIDE (ITEM 20) AT THE BOTTOM

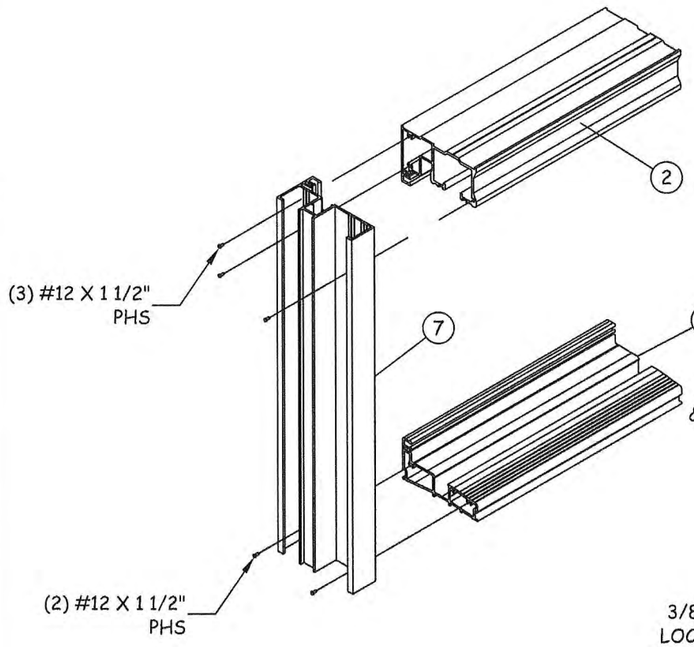

L/10 **FRAME CORNER DETAIL**
DOOR FRAME WITH STANDARD SILL SHOWN

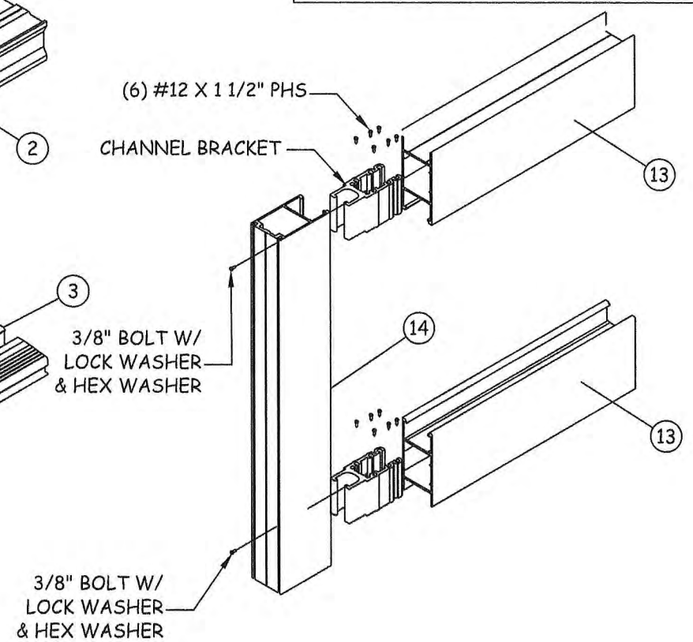

M/10 **PANEL CORNER DETAIL**
DOOR PANEL

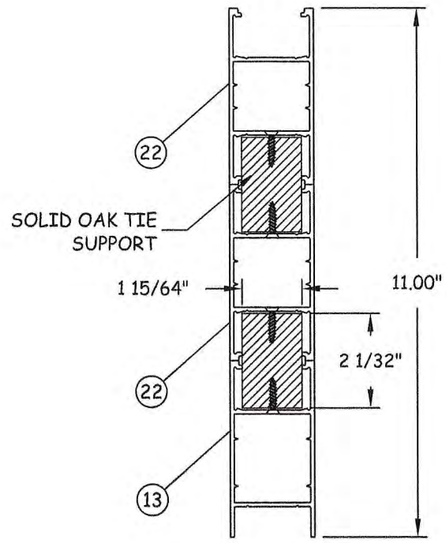

N/10 **VERTICAL SECTION**
OPTIONAL HIGH BOTTOM RAIL (WOOD REINFORCED)

LANAI DOORS
COASTAL INNOVATIVE PRODUCTS
941 NORTH ELM STREET, STE. C
ORANGE, CA 92867
PH: (714) 744-6020 FX: (714) 744-6030

TITLE: E3 HURRICANE BIFOLD DOOR
CORNER DETAILS & CONFIGURATIONS

PREPARED BY:
BUILDING DROPS
127 W. FAIRBANKS AVE., STE. 438
WINTER PARK, FL 32789
PH: (407) 644-6957 FX: (407) 644-2366

REVISIONS

NO.	DESCRIPTION	BY	DATE

STATE OF TEXAS
ALEXIS SPYROU
102957
LICENSED
PROFESSIONAL ENGINEER
7-24-12

DATE:	DWN BY:	CHK BY:	SCALE:
11.07.11	JLA	HFN	NTS

DWG #: CIP003

SHEET: 10 OF 11

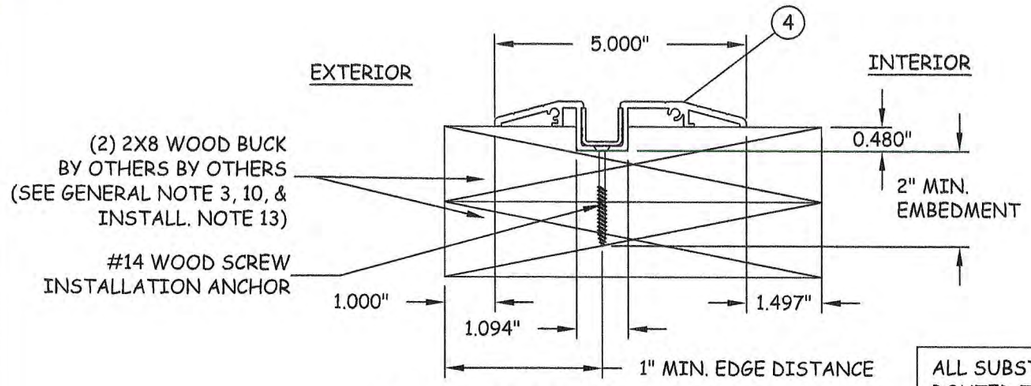

S 11 LOW-RISE SILL DETAIL
2X8 WOOD BUCK INSTALLATION PREPARATION

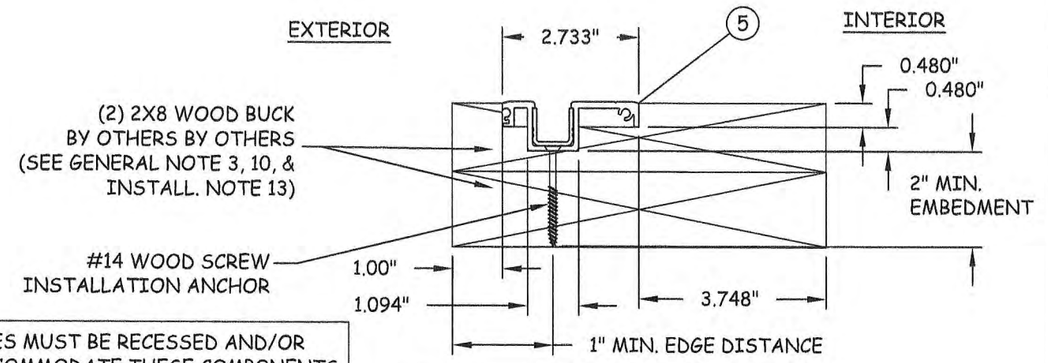

U 11 FLUSH SILL DETAIL
2X8 WOOD BUCK INSTALLATION PREPARATION

ALL SUBSTRATES MUST BE RECESSED AND/OR ROUTED TO ACCOMMODATE THESE COMPONENTS PRIOR TO INSTALLATION. ALL EDGE DISTANCES AND EMBEDMENTS FOR ANCHORS MUST BE MAINTAINED AS NOTED IN THIS SHEET.

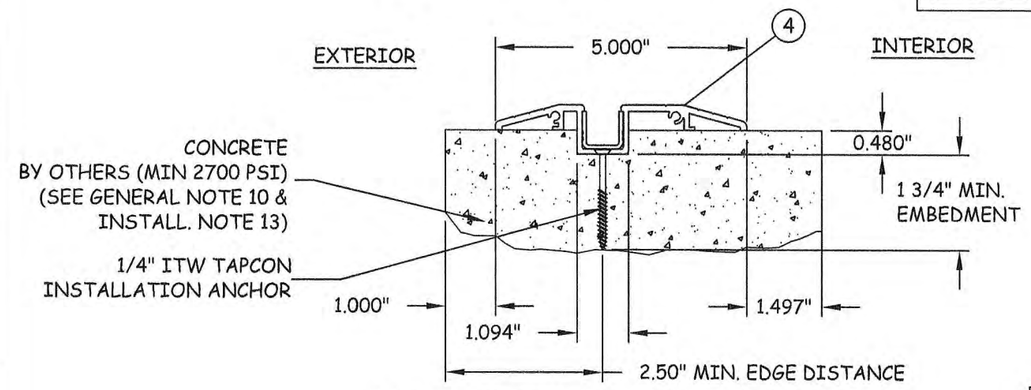

T 11 LOW-RISE SILL DETAIL
CONCRETE INSTALLATION PREPARATION

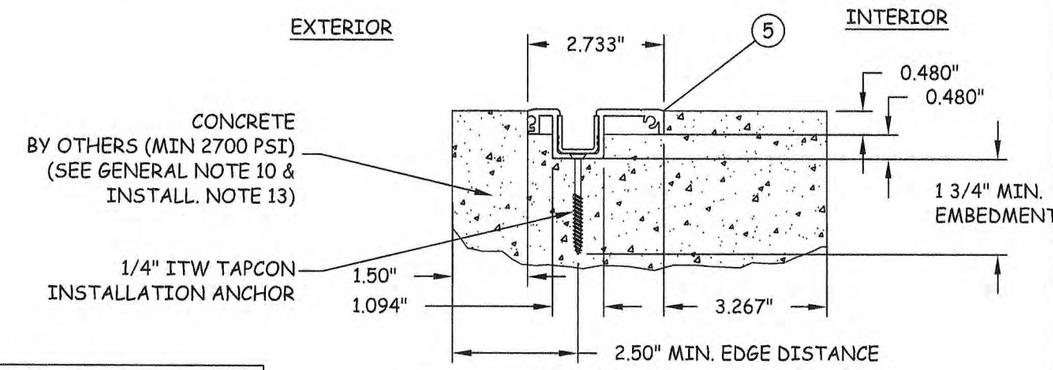

V 11 FLUSH SILL DETAIL
CONCRETE INSTALLATION PREPARATION

NOTE: GE II SILICONE REQUIRED BETWEEN GLASS AND FRAME WHERE WATER INFILTRATION IS REQUIRED.

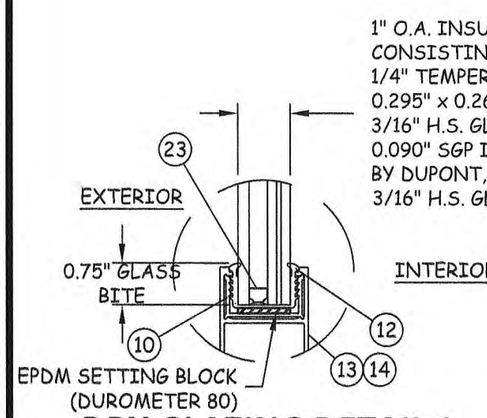

DRY GLAZING DETAIL 1

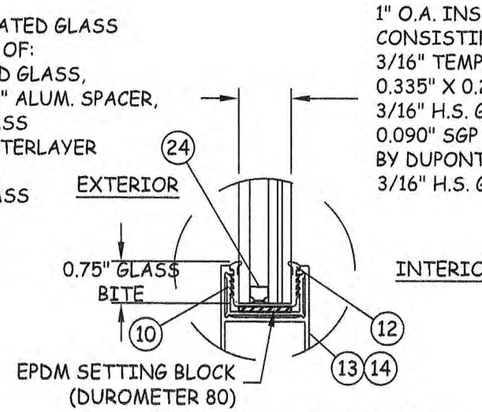

DRY GLAZING DETAIL 2

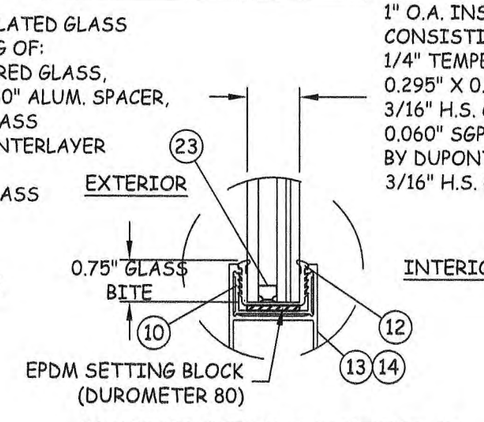

DRY GLAZING DETAIL 3

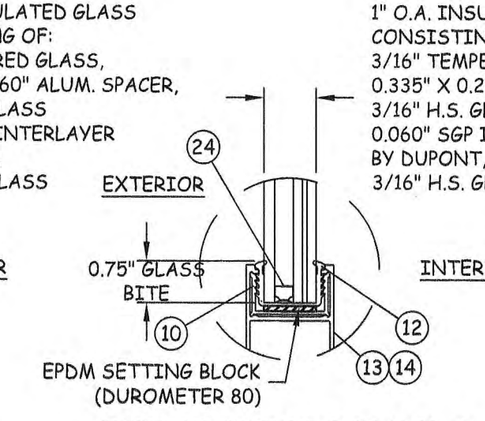

DRY GLAZING DETAIL 4

LANAI DOORS
COASTAL INNOVATIVE PRODUCTS
941 NORTH ELM STREET, STE. C
ORANGE, CA 92867
PH: (714) 744-6020 FX: (714) 744-6030

TITLE:
E3 HURRICANE BIFOLD DOOR
INSTALLATION PREPARATION
& GLAZING DETAILS

PREPARED BY:
BUILDING DROPS
127 W. FAIRBANKS AVE., STE. 438
WINTER PARK, FL 32789
PH: (407) 644-6957 FX: (407) 644-2366

REVISIONS

NO.	DESCRIPTION	BY	DATE

STATE OF TEXAS
ALEXIS SPYROU
102957
LICENSED
PROFESSIONAL ENGINEER
7-24-12

DATE:	DWN BY:	CHK BY:	SCALE:
11.07.11	JLA	HFN	NTS

DWG #: CIP003

SHEET: 11 OF 11