STEVES AND SONS

203 Humble Ave.
San Antonio, TX 78225

Veranda
Opaque Steel Door
OUTSWING
"IMPACT"

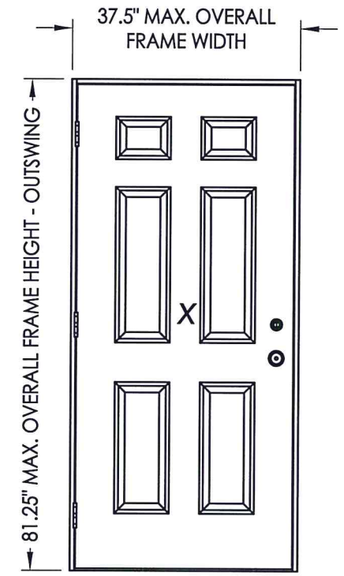

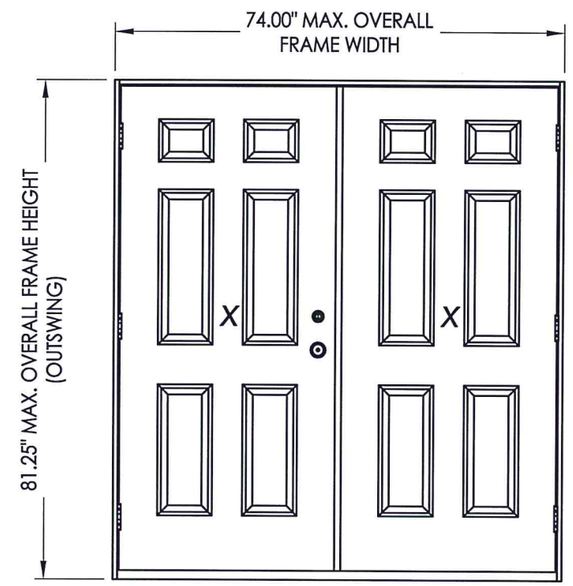

EVALUATED FOR USE IN THE STATE OF TEXAS

The Steel Door described herein complies with the 2006 International Residential Code (IRC), Sections R301 & R613 and the 2006 International Building Code (IBC), Sections 1405.12, 1609, 1714.5, 2403 and 2404 (including Texas revisions) subject to the following conditions:

1. Anchors shall be as listed and spaced as shown in the details. Anchor embedment to base material shall be beyond wall dressing or stucco.
2. This system has been tested and evaluated as a large missile impact protective system for installation in the Seaward, Inland I and Inland II areas. This product meets missile level "D" and includes Wind Zone 4 as defined in ASTM E1996.
3. Allowable design pressure requirements must be equal to or less than the design pressure rating shown in the design pressure chart, sheet 1 of this drawing.
4. Conditions not covered by this drawing are subject to further engineering analysis.

SUPPORTING DOCUMENTS & EVIDENCE

1. Testing per AAMA/WDMA/CSA 101/I.S.2/A440-05 & ASTM E 1886/1996-02:
   Testing Evaluation Laboratories, Inc. test report(s) #: TEL 01520038 & TEL 01520039.
2. Calculations (Anchoring) prepared by Lyndon F. Schmidt, P.E.
3. Certificate of Participation issued by the National Accreditation and Management Institute, Inc., certifying that STEVES AND SONS is manufacturing products within a Quality Assurance program.

TABLE OF CONTENTS

SHEET#	DESCRIPTION
1	Typical elevations, design pressures & general notes
2	Door panel details
3	Elevations
4	Horizontal cross section
5	Vertical cross sections
6	Frame anchoring
7	Frame anchoring
8	Astragal details
9	Components and bill of materials

CONFIGURATION	MAX. FRAME DIMENSION	DESIGN PRESSURE (PSF) OUTSWING	
		POSITIVE	NEGATIVE
X	37.5" x 81.25"	+47.0	-47.0
XX	74.00" x 81.25"	+47.0	-47.0

STATE OF TEXAS
LYNDON F. SCHMIDT
104123
LICENSED
PROFESSIONAL ENGINEER
7-22-15

Documents Prepared By: Lyndon F. Schmidt, P.E.
TEXAS P.E. #104123
R.W. BUILDING CONSULTANTS, INC.
P.O. Box 230 Valrico FL 33595
Phone No.: 813.659.9197
TEXAS BOARD OF PROFESSIONAL ENGINEERS
CERTIFICATE OF REGISTRATION # F-11852

PRODUCT: STEVES AND SONS STEEL DOOR

PART OR ASSEMBLY: TYPICAL ELEVATIONS, DESIGN PRESSURES & GENERAL NOTES

REVISIONS

NO.	DATE	Manuf./Product Name Change	BY
1	7/21/15		LFS

DATE: 05/17/10
SCALE: N.T.S.
DWG. BY: JK
CHK. BY: LFS
DRAWING NO.: TX-4083
SHEET 1 OF 9

© 2010 R.W. BUILDING CONSULTANTS INC.

R:\Clients\Steves and Sons - Permanent\B - Texas Dept of Ins\Drawings\TX-4083.dwg, TX-4083

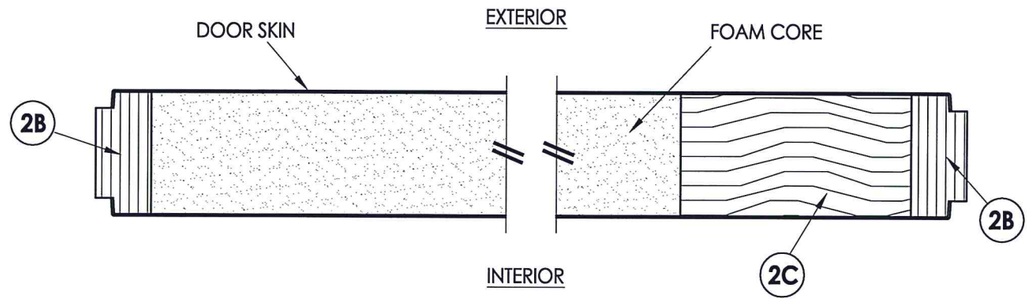

1/2 **HORIZONTAL CROSS SECTION**

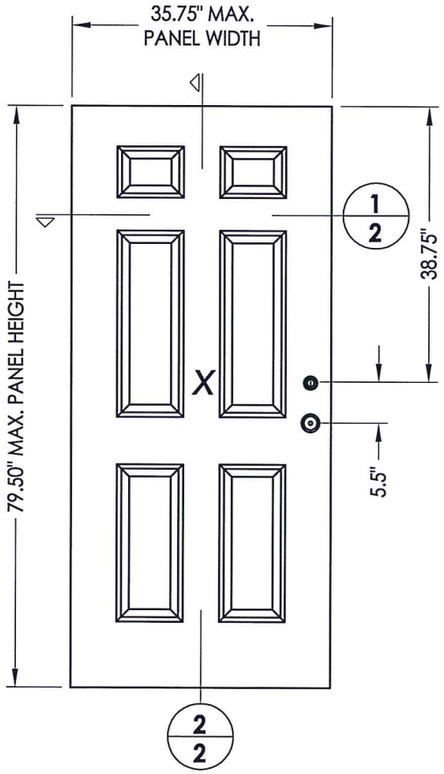

40 **DOOR PANEL**

STEEL DOOR SKIN: MIN. 0.019" THK.
CORE MATERIAL: EPS FOAM (POLYSTYRENE)

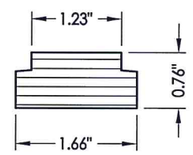

2A **TOP RAIL**
LVL

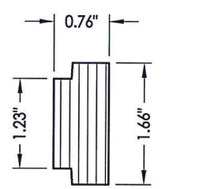

2B **HINGE & LATCH STILE**
LVL

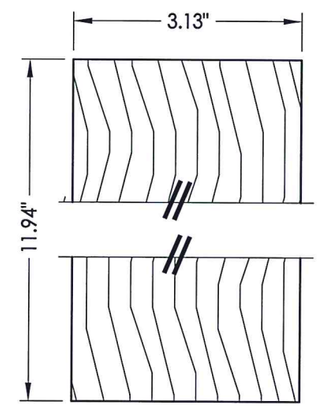

2C **LOCK BLOCK**
Wood (S.G.>= 0.42)

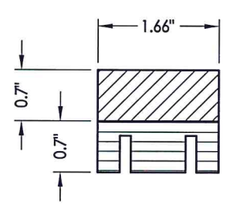

2D **BOTTOM RAIL**
LVL/WPC

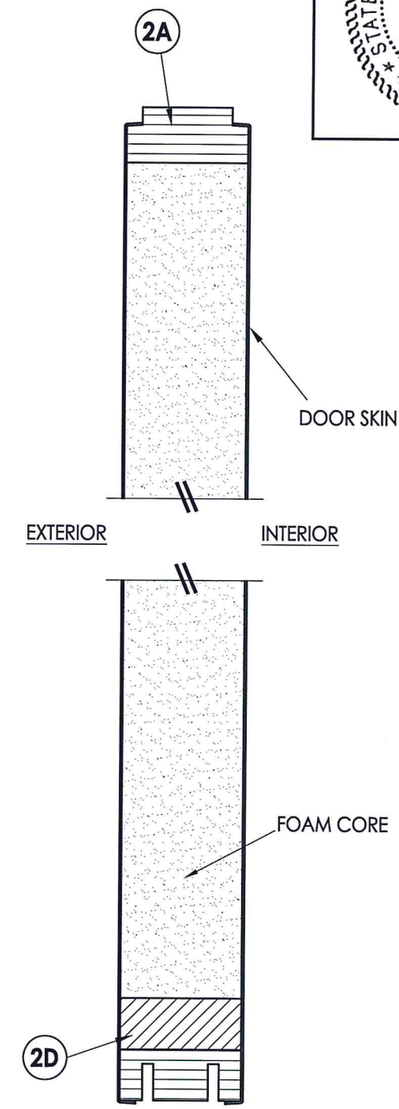

2/2 **VERTICAL CROSS SECTION**

STATE OF TEXAS
LYNDON F. SCHMIDT
104123
LICENSED
PROFESSIONAL ENGINEER
7.22.15

Documents Prepared By: Lyndon F. Schmidt, P.E.
TEXAS P.E. #104123

RW BUILDING CONSULTANTS, INC.
P.O. Box 230 Valrico FL. 33595
Phone No.: 813.659.9197

TEXAS BOARD OF PROFESSIONAL ENGINEERS
CERTIFICATE OF REGISTRATION # F-11852

PRODUCT: STEVES AND SONS STEEL DOOR

PART OR ASSEMBLY: DOOR PANEL DETAILS

REVISIONS

NO.	DATE	Manuf./Product Name Change	BY
1	7/21/15		LFS

DATE: 05/17/10
SCALE: N.T.S.
DWG. BY: JK
CHK. BY: LFS
DRAWING NO.: TX-4083
SHEET 2 OF 9

© 2010 R.W. BUILDING CONSULTANTS INC.

R:\Clients\Steves and Sons - Permanent\Texas Dept of Ins\TX-4083.dwg, 1-2

HARDWARE CHART		
MANUFACTURER	MODEL	ITEM #
KWIKSET	LOCK: 200	17
	DEADBOLT: 600	18

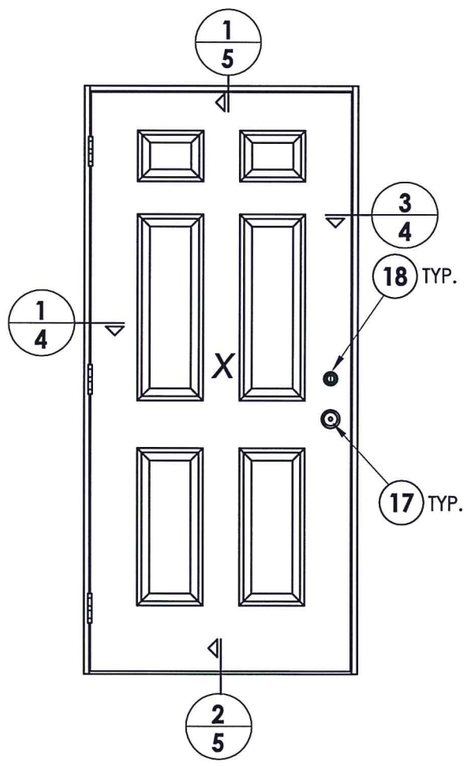

ELEVATION (X)

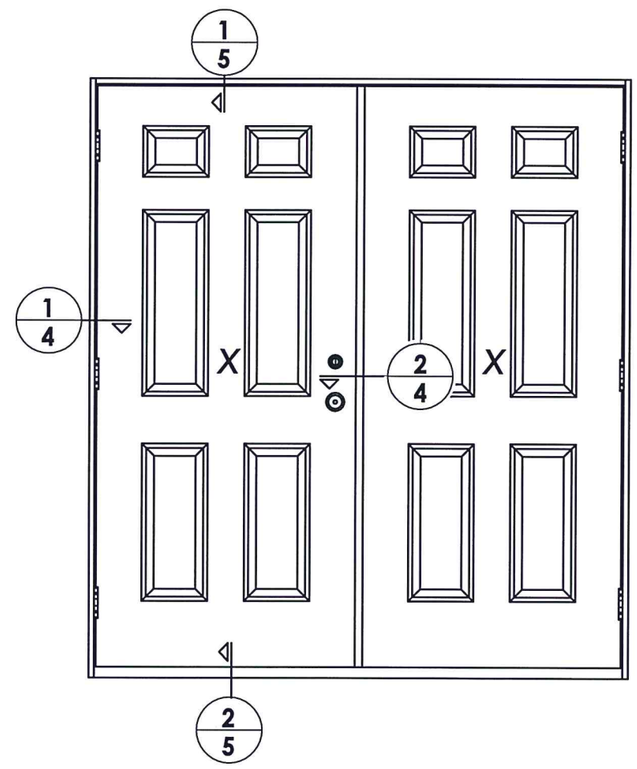

ELEVATION (XX)

STATE OF TEXAS
LYNDON F. SCHMIDT
104123
LICENSED
PROFESSIONAL ENGINEER
7.22.15

Documents Prepared By: Lyndon F. Schmidt, P.E.
TEXAS P.E. #104123

R.W. BUILDING CONSULTANTS, INC.
P.O. Box 230 Valrico FL. 33595
Phone No.: 813.659.9197

TEXAS BOARD OF PROFESSIONAL ENGINEERS
CERTIFICATE OF REGISTRATION # F-11852

PRODUCT: STEVES AND SONS STEEL DOOR

PART OR ASSEMBLY: ELEVATIONS

NO.	DATE	Manuf./Product Name Change	BY
1	7/21/15		LFS

REVISIONS

DATE: 05/17/10
SCALE: N.T.S.
DWG. BY: JK
CHK. BY: LFS
DRAWING NO.: TX-4083
SHEET 3 OF 9

© 2010 R.W. BUILDING CONSULTANTS INC.

R:\Clients\Steves and Sons - Permanent\Texas Dept of Ins\TX-4083.dwg, 1-3

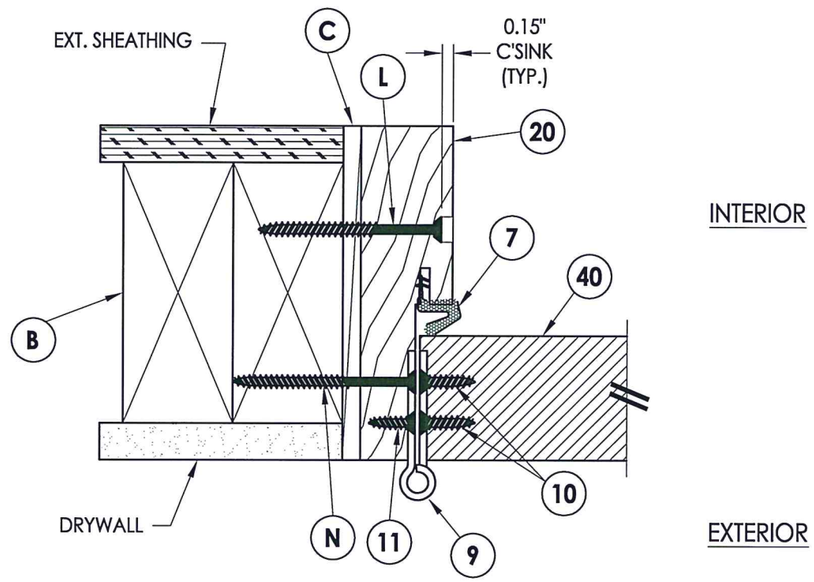

1/4 **HORIZONTAL CROSS SECTION**

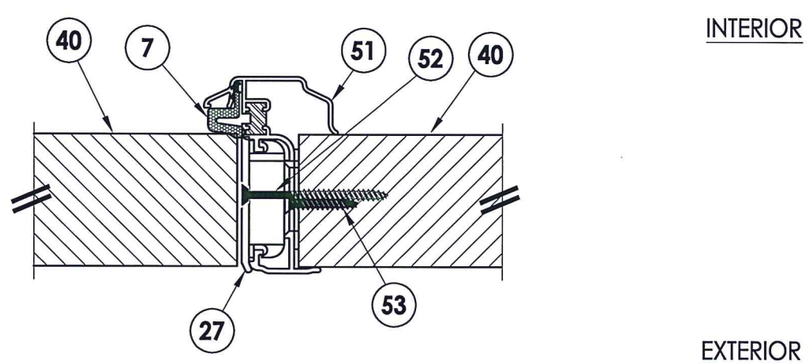

2/4 **HORIZONTAL CROSS SECTION**

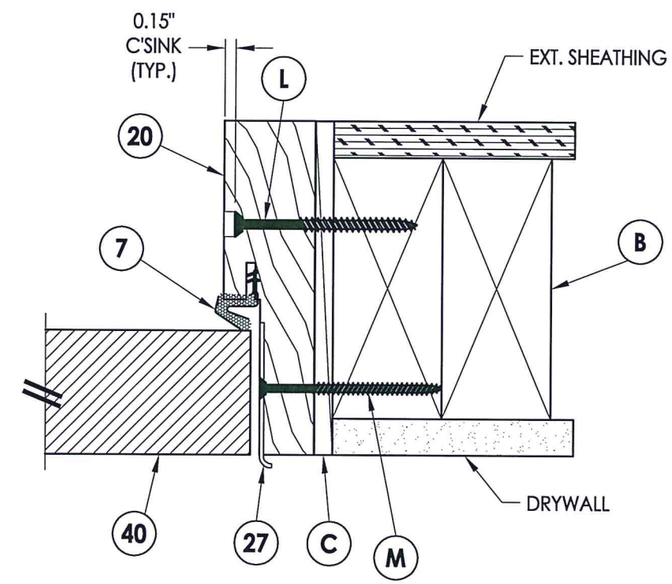

3/4 **HORIZONTAL CROSS SECTION**

STATE OF TEXAS
LYNDON F. SCHMIDT
104123
LICENSED
PROFESSIONAL ENGINEER
7-22-15

Documents Prepared By: Lyndon F. Schmidt, P.E.
TEXAS P.E. #104123

RW BUILDING CONSULTANTS, INC.
P.O. Box 230 Valrico FL. 33595
Phone No.: 813.659.9197

TEXAS BOARD OF PROFESSIONAL ENGINEERS
CERTIFICATE OF REGISTRATION # F-11852

PRODUCT: STEVES AND SONS STEEL DOOR

PART OR ASSEMBLY: HORIZONTAL CROSS SECTIONS

NO.	DATE		BY
1	7/21/15	Manuf./Product Name Change	LFS

REVISIONS

DATE: 05/17/10
SCALE: N.T.S.
DWG. BY: JK
CHK. BY: LFS
DRAWING NO.: TX-4083
SHEET 4 OF 9

© 2010 R.W. BUILDING CONSULTANTS INC.

R:\Clients\Steves and Sons - Permanent\Texas Dept of Ins\TX-4083.dwg, 1-4

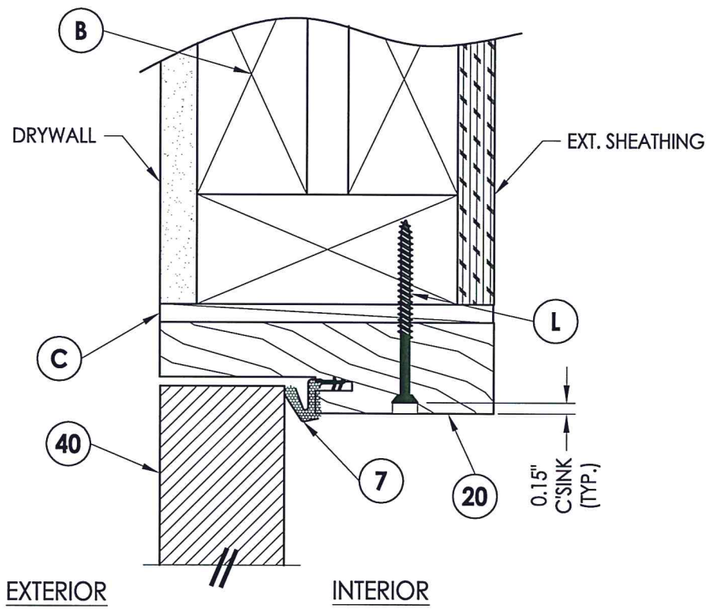

1/5 VERTICAL CROSS SECTION

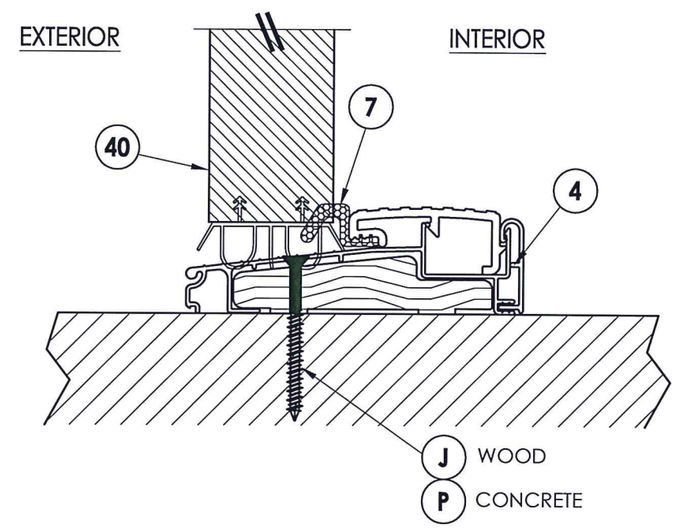

2/5 VERTICAL CROSS SECTION

STATE OF TEXAS
LYNDON F. SCHMIDT
104123
LICENSED PROFESSIONAL ENGINEER
7.22.15

Documents Prepared By: Lyndon F. Schmidt, P.E.
TEXAS P.E. #104123

RW BUILDING CONSULTANTS, INC.
P.O. Box 230 Valrico FL. 33595
Phone No.: 813.659.9197

TEXAS BOARD OF PROFESSIONAL ENGINEERS
CERTIFICATE OF REGISTRATION # F-11852

PRODUCT: STEVES AND SONS STEEL DOOR

PART OR ASSEMBLY: VERTICAL CROSS SECTIONS

REVISIONS

NO.	DATE	Manuf./Product Name Change	BY
1	7/21/15		LFS

DATE: 05/17/10
SCALE: N.T.S.
DWG. BY: JK
CHK. BY: LFS
DRAWING NO.: TX-4083
SHEET 5 OF 9

© 2010 R.W. BUILDING CONSULTANTS INC.

R:\Clients\Steves and Sons - Permanent\Texas Dept of Ins\TX-4083.dwg, 1-5

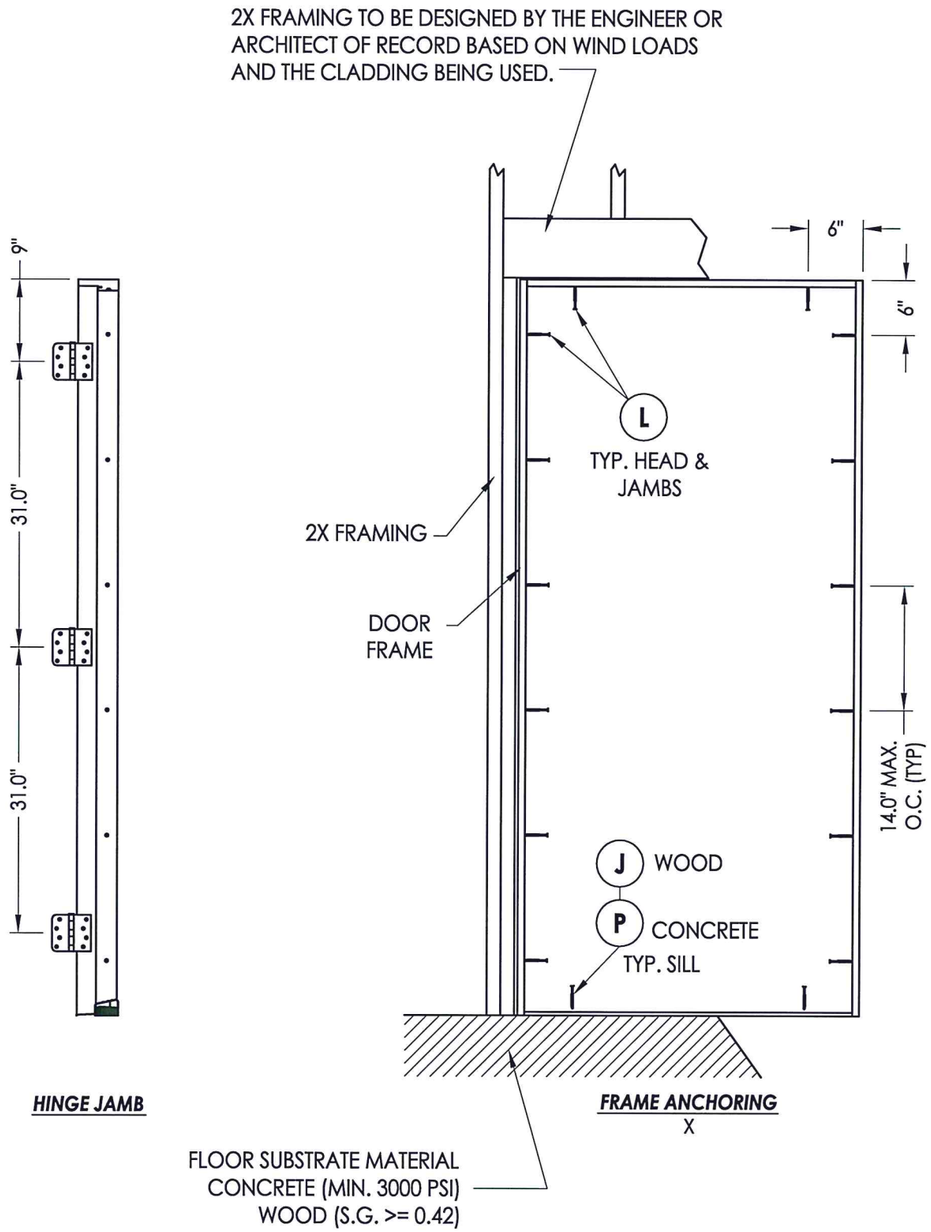

HINGE JAMB

FRAME ANCHORING
X

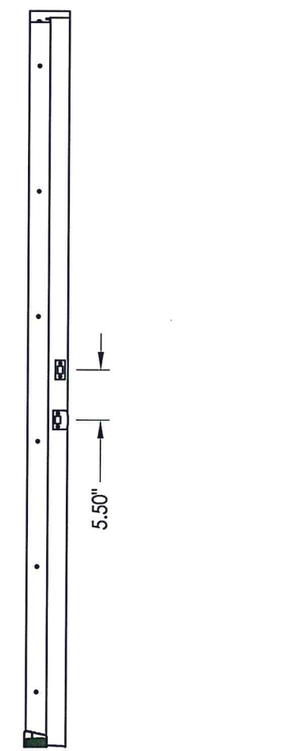

STRIKE JAMB

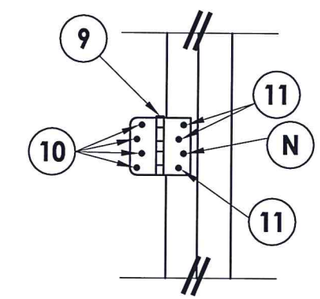

HINGE DETAIL

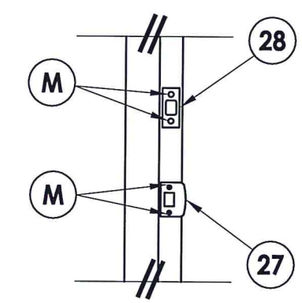

LATCH & DEADBOLT DETAIL

STATE OF TEXAS
LYNDON F. SCHMIDT
104123
LICENSED
PROFESSIONAL ENGINEER
7-22-15

Documents Prepared By: Lyndon F. Schmidt, P.E.
TEXAS P.E. #104123

RW BUILDING CONSULTANTS, INC.
P.O. Box 230 Valrico FL. 33595
Phone No.: 813.659.9197

TEXAS BOARD OF PROFESSIONAL ENGINEERS
CERTIFICATE OF REGISTRATION # F-11852

PRODUCT: STEVES AND SONS STEEL DOOR

PART OR ASSEMBLY: FRAME ANCHORING

REVISIONS

NO.	DATE		BY
1	7/21/15	Manuf./Product Name Change	LFS

DATE: 05/17/10
SCALE: N.T.S.
DWG. BY: JK
CHK. BY: LFS
DRAWING NO.: TX-4083
SHEET 6 OF 9

© 2010 R.W. BUILDING CONSULTANTS INC.

R:\Clients\Steves and Sons - Permanent\Texas Dept of Ins\TX-4083.dwg, 1-6

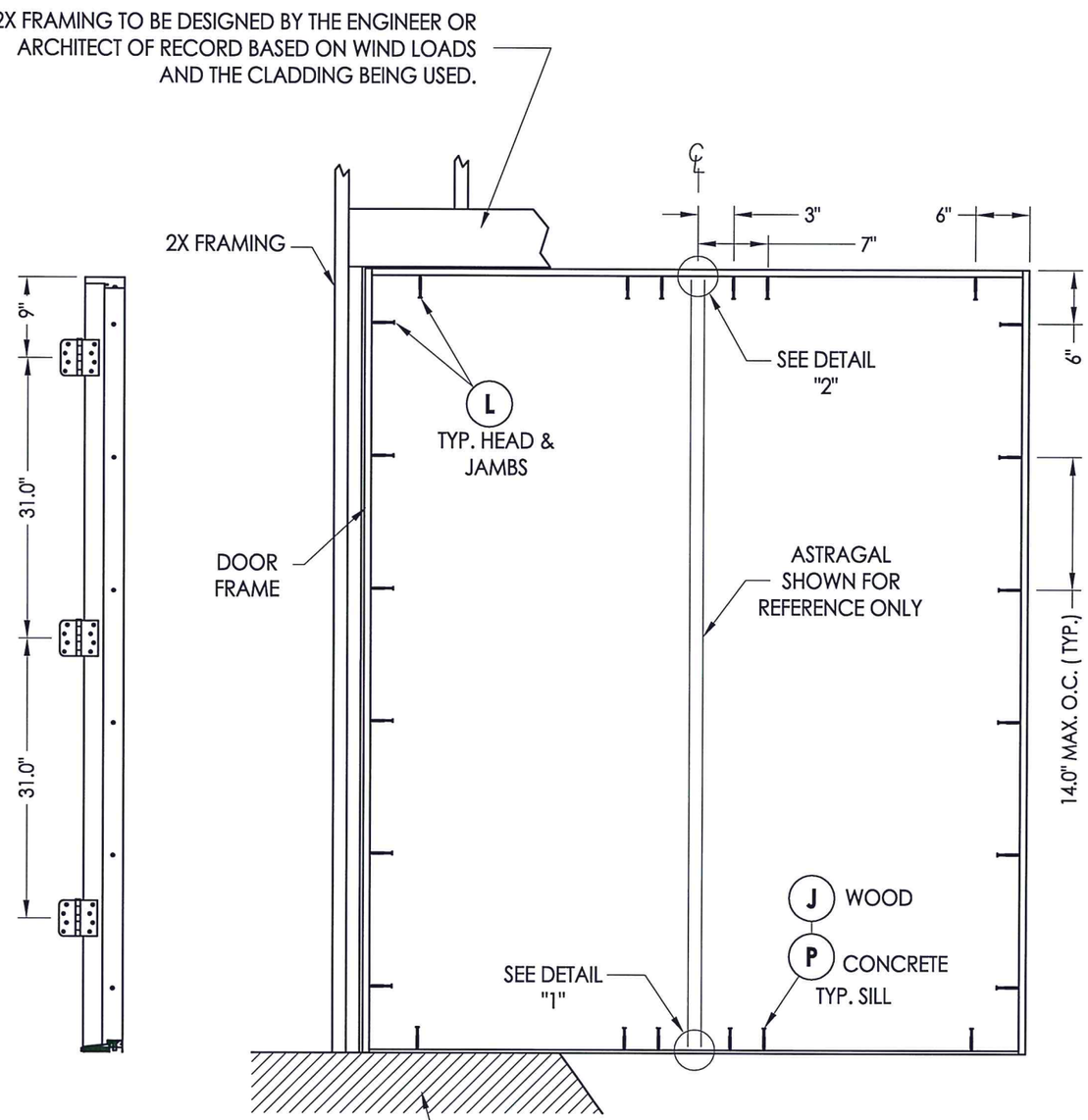

FRAME ANCHORING
XX

HINGE JAMB

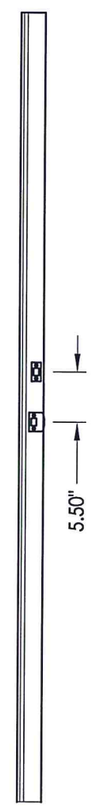

ASTRAGAL

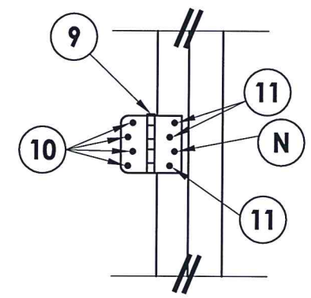

HINGE DETAIL

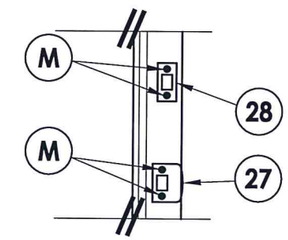

LATCH & DEADBOLT DETAIL

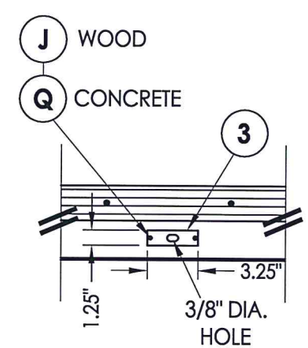

DETAIL 1

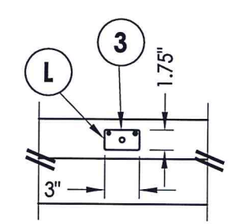

DETAIL 2

STATE OF TEXAS
LYNDON F. SCHMIDT
104123
LICENSED PROFESSIONAL ENGINEER
7.22.15

Documents Prepared By: Lyndon F. Schmidt, P.E.
TEXAS P.E. #104123
RW BUILDING CONSULTANTS, INC.
P.O. Box 230 Valrico FL. 33595
Phone No.: 813.659.9197
TEXAS BOARD OF PROFESSIONAL ENGINEERS
CERTIFICATE OF REGISTRATION # F-11852

PRODUCT: STEVES AND SONS STEEL DOOR

PART OR ASSEMBLY: FRAME ANCHORING

REVISIONS

NO.	DATE	Manuf./Product Name Change	BY
1	7/21/15		LFS

DATE: 05/17/10
SCALE: N.T.S.
DWG. BY: JK
CHK. BY: LFS
DRAWING NO.: TX-4083
SHEET 7 OF 9

© 2010 R.W. BUILDING CONSULTANTS INC.

R:\Clients\Steves and Sons - Permanent\Texas Dept of Ins\TX-4083.dwg, 1-7

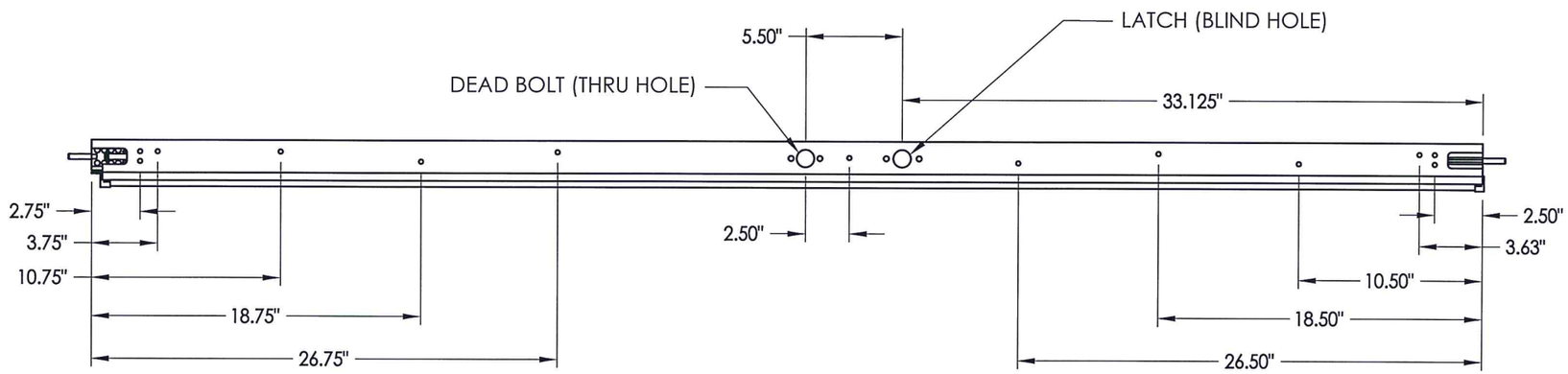

TOP

BOTTOM

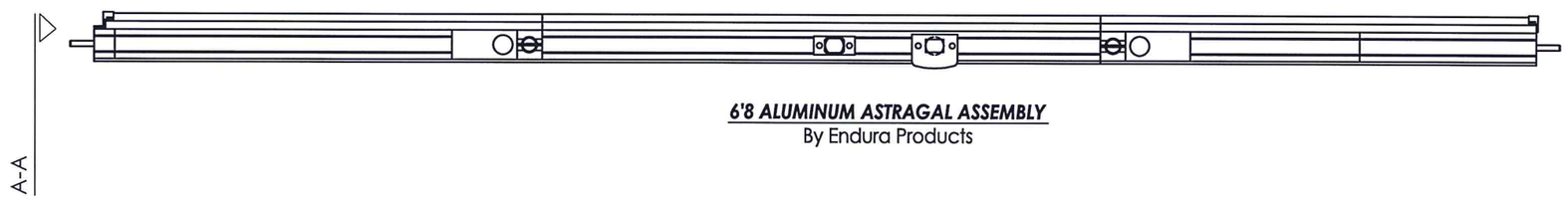

6'8 ALUMINUM ASTRAGAL ASSEMBLY
By Endura Products

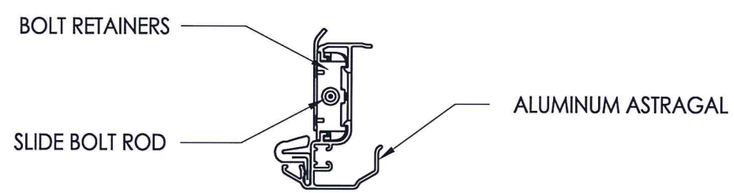

VIEW A-A
Aluminum Astragal Assembly

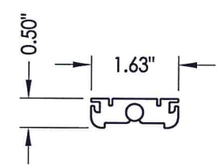

BOLT RETAINERS
MATL: 9-3/4" Aluminum

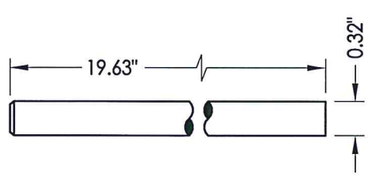

SLIDE BOLT ROD
MATL: Steel

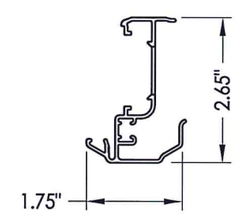

51 ***ALUMINUM ASTRAGAL***
By Endura Products

STATE OF TEXAS
LYNDON F. SCHMIDT
104123
LICENSED
PROFESSIONAL ENGINEER

7.22.15

Documents Prepared By: Lyndon F. Schmidt, P.E.
TEXAS P.E. #104123

RW BUILDING CONSULTANTS, INC.
P.O. Box 230 Valrico FL. 33595
Phone No.: 813.659.9197

TEXAS BOARD OF PROFESSIONAL ENGINEERS
CERTIFICATE OF REGISTRATION # F-11852

PRODUCT: STEVES AND SONS STEEL DOOR

PART OR ASSEMBLY: ENDURA ASTRAGAL DETAILS

NO.	DATE	Manuf./Product Name Change	BY
1	7/21/15		LFS

REVISIONS

DATE: 05/17/10
SCALE: N.T.S.
DWG. BY: JK
CHK. BY: LFS
DRAWING NO.: TX-4083
SHEET 8 OF 9

© 2010 R.W. BUILDING CONSULTANTS INC.

R:\Clients\Steves and Sons - Permanent\Texas Dept of Ins\TX-4083.dwg, 1-8

BILL OF MATERIALS

ITEM #	DESCRIPTION	MATERIAL
B	2X FRAMING (SG >= 0.42)	WOOD
C	1/4" MAX. SHIM SPACE	-
J	#10 X 3" PFH WOOD SCREW	STEEL
K	2X REINFORCEMENT (CLEAR PINE SG >= 0.42)	WOOD
L	#10 X 2-1/2" PFH WOOD SCREW	STEEL
M	#8 X 2-1/2" PFH WOOD SCREW	STEEL
N	#9 X 2-1/2" PFH WOOD SCREW	STEEL
P	1/4" PFH ELCO OR ITW CONCRETE SCREW (1-3/4" MIN. EMB.)	STEEL
Q	3/16" PFH ITW CONCRETE SCREW (1-3/4" MIN. EMB.)	STEEL
3	ASTRAGAL STRIKE PLATE	STEEL
4	OUTSWING THRESHOLD ALUMINUM W/ COMPOSITE SUBSTRATE	ALUM/COMP.
7	WEATHERSTRIP BY Q-LON	FOAM
9	4" HINGE	STEEL
10	#9 X 1" PFH WOOD SCREW	STEEL
11	#9 X 5/8" PFH WOOD SCREW	STEEL
20	JAMB FINGER - JOINT - PINE (SG >= 0.42)	WOOD
27	LATCH STRIKE PLATE	STEEL
28	DEADBOLT PLATE	STEEL
30	DOOR SWEEP	PVC
35	QUARTER ROUND	WOOD
40	DOOR PANEL - SEE DOOR PANEL DETAIL SHEET FOR CONSTRUCTION DETAILS	-
51	ASTRAGAL BY ENDURA	ALUM
52	#8 x 2-1/4" PFH WOOD SCREW	STEEL
53	#8 x 1" PFH WOOD SCREW	STEEL

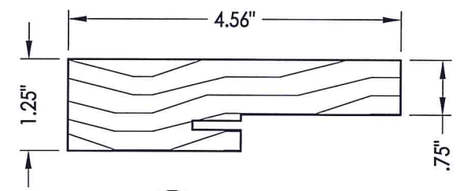

20 **HEAD & SIDE**
Jamb

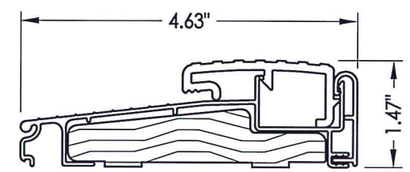

4 **OUTSWING THRESHOLD**

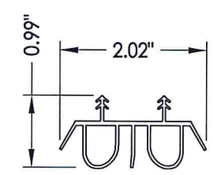

30 **SWEEP**

CONCRETE ANCHOR NOTES:

1. *Concrete anchor locations at the corners may be adjusted to maintain the min. edge distance to mortar joints.*
2. *Concrete anchor locations noted as "MAX. ON CENTER" must be adjusted to maintain the min. edge distance to mortar joints, additional concrete anchors may be required to ensure the "MAX. ON CENTER" dimension are not exceeded.*
3. *Concrete anchor table:*

ANCHOR TYPE	ANCHOR SIZE	MIN. EMBEDMENT	MIN. CLEARANCE TO MASONRY EDGE	MIN. CLEARANCE TO ADJACENT ANCHOR
ITW TAPCON®	3/16"	1-3/4"	3"	1-1/2"
	1/4"	1-3/4"	1-1/2"	4"
ELCO ULTRACON®	1/4"	1-3/4"	1"	4"

STATE OF TEXAS
LYNDON F. SCHMIDT
104123
LICENSED
PROFESSIONAL ENGINEER
7-22-15

Documents Prepared By: Lyndon F. Schmidt, P.E.
TEXAS P.E. #104123

RW BUILDING CONSULTANTS, INC.
P.O. Box 230 Valrico FL. 33595
Phone No.: 813.659.9197

TEXAS BOARD OF PROFESSIONAL ENGINEERS
CERTIFICATE OF REGISTRATION # F-11852

PRODUCT: STEVES AND SONS STEEL DOOR

PART OR ASSEMBLY: COMPONENTS AND B.O.M.

NO.	DATE	Manuf./Product Name Change	BY
1	7/21/15		LFS

REVISIONS

DATE: 05/17/10
SCALE: N.T.S.
DWG. BY: JK
CHK. BY: LFS
DRAWING NO.: TX-4083
SHEET 9 OF 9

© 2010 R.W. BUILDING CONSULTANTS INC.

R:\Clients\Steves and Sons - Permanent\Texas Dept of Ins\TX-4083.dwg, 1-9