STEVES AND SONS
203 Humble Ave.
San Antonio, TX 78225

# Veranda
# Opaque Fiberglass Double Door w/ or w/o Sidelites
## INSWING / OUTSWING
## "NON-IMPACT"

EVALUATED FOR USE IN THE STATE OF TEXAS

The Fiberglass Door described herein complies with the 2006 International Residential Code (IRC), Sections R301 & R613 and the 2006 International Building Code (IBC), Sections 1405.12, 1609, 1714.5, 2403 and 2404 (including Texas revisions) subject to the following conditions:

1. Anchors shall be as listed and spaced as shown in the details. Anchor embedment to base material shall be beyond wall dressing or stucco.
2. When used in areas requiring wind-borne debris protection this product is required to be protected with an impact resistant covering that complies with Section R301.2.1.2 of the IRC and Section 1609.1.2 of the IBC.
3. Allowable design pressure requirements must be equal to or less than the design pressure rating shown in the design pressure chart, sheet 1 of this drawing.
4. Conditions not covered by this drawing are subject to further engineering analysis.

SUPPORTING DOCUMENTS & EVIDENCE

1. Testing per AAMA/WDMA/CSA 101/I.S.2/A440-05 :
   Testing Evaluation Laboratories, Inc. test report(s) #: TEL 01530200 & TEL 01530201.
2. Calculations (Anchoring and Glass load resistance report ASTM E1300-04) prepared by Lyndon F. Schmidt, P.E.
3. Certificate of Participation issued by the National Accreditation and Management Institute, Inc., certifying that STEVES AND SONS is manufacturing products within a Quality Assurance program.

**TABLE OF CONTENTS**


| SHEET# | DESCRIPTION |
|---|---|
| 1 | Typical elevations, design pressures & general notes |
| 2 | Door panel details |
| 3 | Sidelite panel details |
| 4 | Horizontal cross section |
| 5 | Vertical cross sections |
| 6 | Vertical cross sections |
| 7 | Frame anchoring |
| 8 | Glazing details |
| 9 | Astragal details |
| 10 | Bill of materials and components |


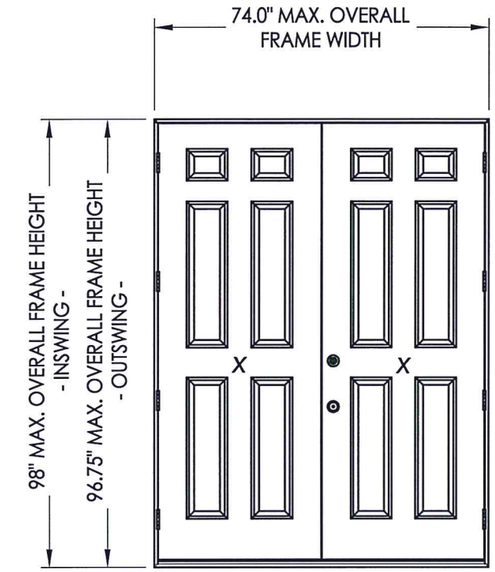


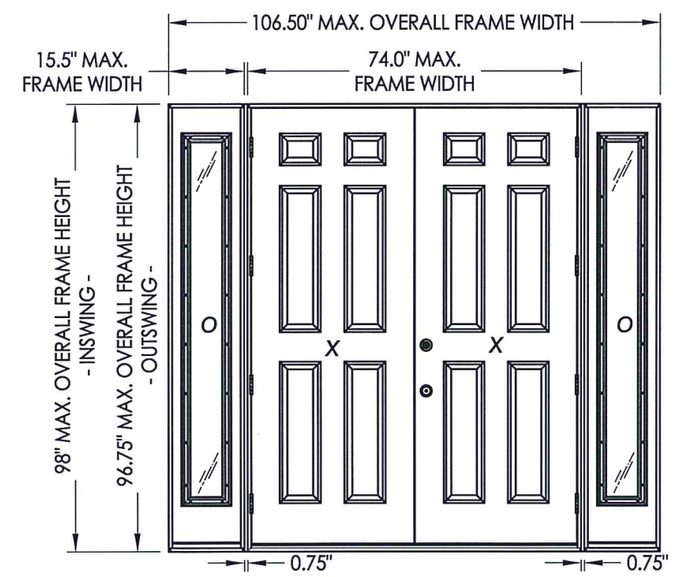


| CONFIGURATION | MAX. FRAME DIMENSION | MAX. D.L.O. DIMENSION | DESIGN PRESSURE (PSF) INSWING | | DESIGN PRESSURE (PSF) OUTSWING | |
|---|---|---|---|---|---|---|
| | | | POSITIVE | NEGATIVE | POSITIVE | NEGATIVE |
| XX | 74.00" x 98.00" | N/A | +45.0 | -55.0 | +45.0 | +45.0 |
| OXXO | 106.50" x 98.00" | 7.0" x 79.87" | +45.0 | -55.0 | +45.0 | +45.0 |

STATE OF TEXAS
LYNDON F. SCHMIDT
104123
LICENSED PROFESSIONAL ENGINEER
7.22.15

Documents Prepared By: Lyndon F. Schmidt, P.E.
TEXAS P.E. #104123
RW BUILDING CONSULTANTS, INC.
P.O. Box 230 Valrico FL. 33595
Phone No.: 813.659.9197
TEXAS BOARD OF PROFESSIONAL ENGINEERS
CERTIFICATE OF REGISTRATION # F-11852

PRODUCT: STEVES AND SONS FIBERGLASS DOOR

PART OR ASSEMBLY: TYPICAL ELEVATION, DESIGN PRESSURES & GENERAL NOTES

REVISIONS

| NO. | DATE | Manuf./Product Name Change | BY |
|---|---|---|---|
| 1 | 7/16/15 | | JK |

DATE: 5/19/10
SCALE: N.T.S.
DWG. BY: JK
CHK. BY: LFS
DRAWING NO.: TX-4095
SHEET 1 OF 10

© 2010 R.W. BUILDING CONSULTANTS INC.

Clients\Steves and Sons - Permanent\Texas Dept of Ins\TX-4092-95.dwg, TX-4095

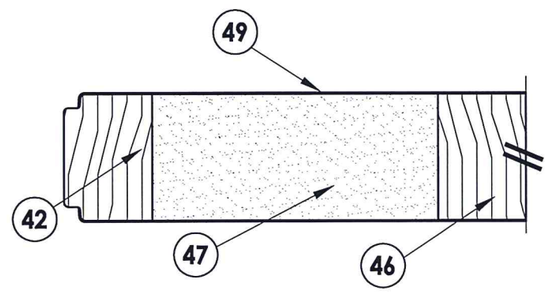


EXTERIOR

INTERIOR

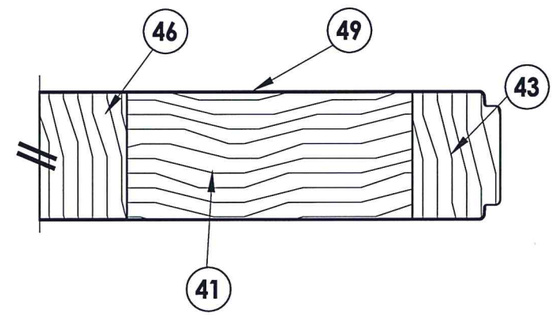


1/2 **HORIZONTAL CROSS SECTION**

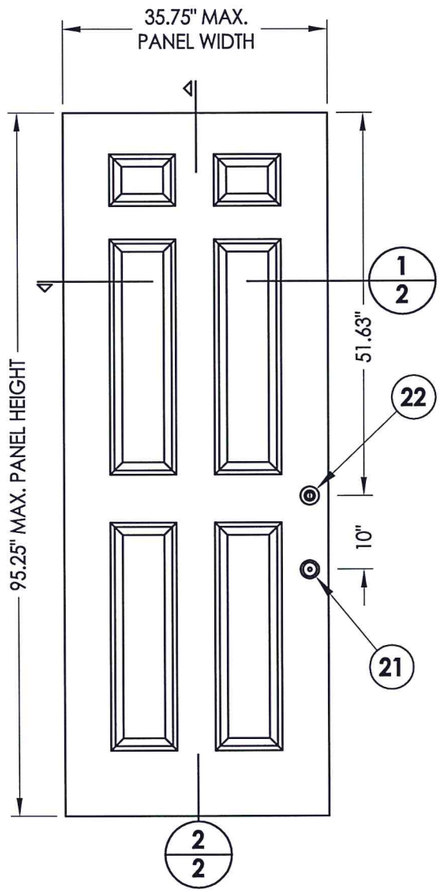


40 **DOOR PANEL**
Fiberglass

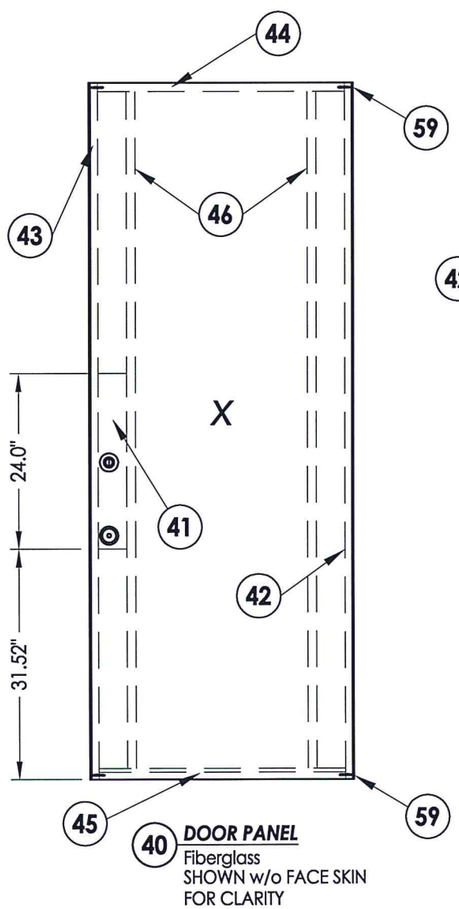


40 **DOOR PANEL**
Fiberglass
SHOWN w/o FACE SKIN
FOR CLARITY

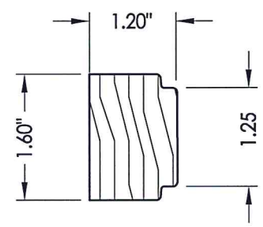


42 43 **HINGE AND LATCH STILE**
Wood

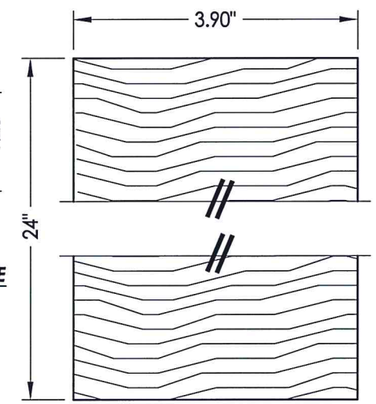


INTERIOR

EXTERIOR

41 **LOCK BLOCK**
Wood

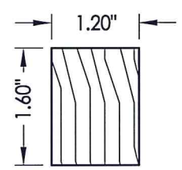


46 **LITE FRAME REINFORCMENT**
Wood

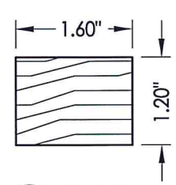


44 **TOP RAIL**
Wood

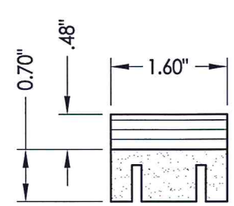


45 **BOTTOM RAIL**
Composite / LVL

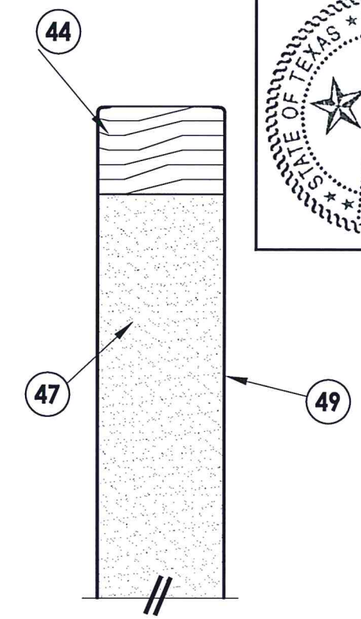


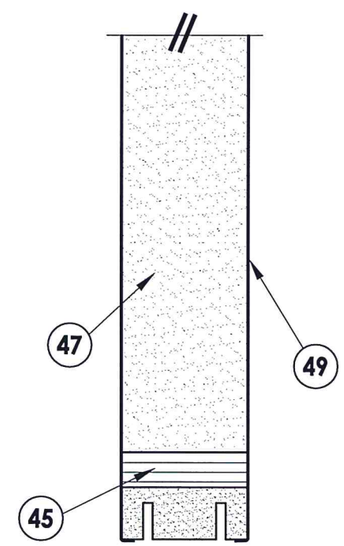


2/2 **VERTICAL CROSS SECTION**

STATE OF TEXAS
LYNDON F. SCHMIDT
104123
LICENSED
PROFESSIONAL ENGINEER

7.22.15

Documents Prepared By: Lyndon F. Schmidt, P.E.
TEXAS P.E. #104123

RW BUILDING CONSULTANTS, INC.
P.O. Box 230 Valrico FL. 33595
Phone No.: 813.659.9197

TEXAS BOARD OF PROFESSIONAL ENGINEERS
CERTIFICATE OF REGISTRATION # F-11852

PRODUCT: STEVES AND SONS FIBERGLASS DOOR

PART OR ASSEMBLY: DOOR PANEL DETAILS

REVISIONS

| NO. | DATE | Manuf./Product Name Change | BY |
|---|---|---|---|
| 1 | 7/16/15 | | JK |

DATE: 5/19/10
SCALE: N.T.S.
DWG. BY: JK
CHK. BY: LFS
DRAWING NO.: TX-4095
SHEET 2 OF 10

© 2010 R.W. Building Consultants Inc.

Clients\Steves and Sons - Permanent\Texas Dept of Ins\TX-4092-95.dwg, 2-4

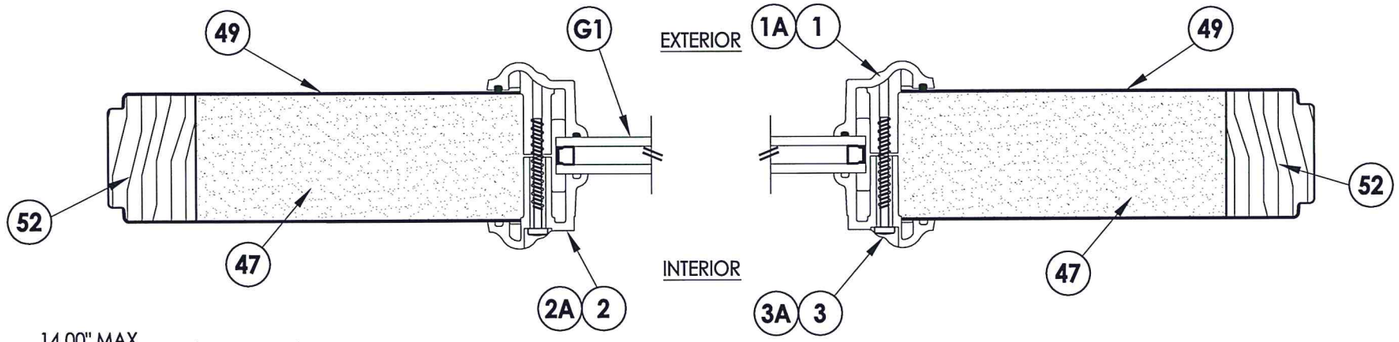


1/3 **HORIZONTAL CROSS SECTION**

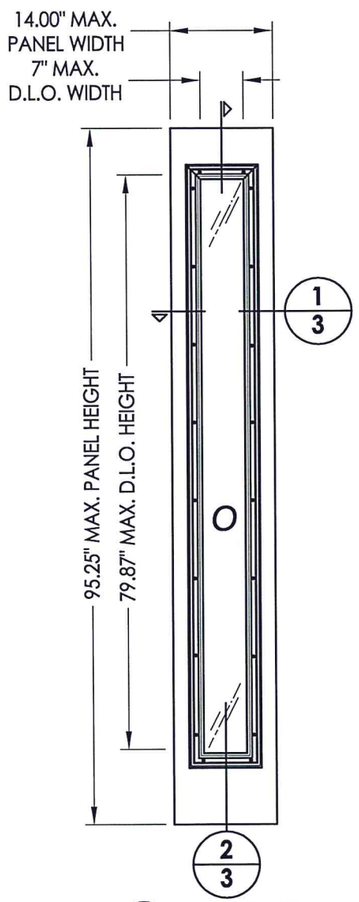


50 **SIDELITE PANEL**
Fiberglass

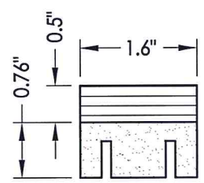


53 **SIDELITE BOTTOM RAIL**

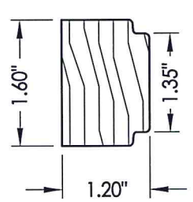


52 **SIDELITE STILE**
Wood

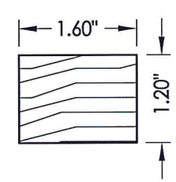


54 **SIDELITE TOP RAIL**
Wood

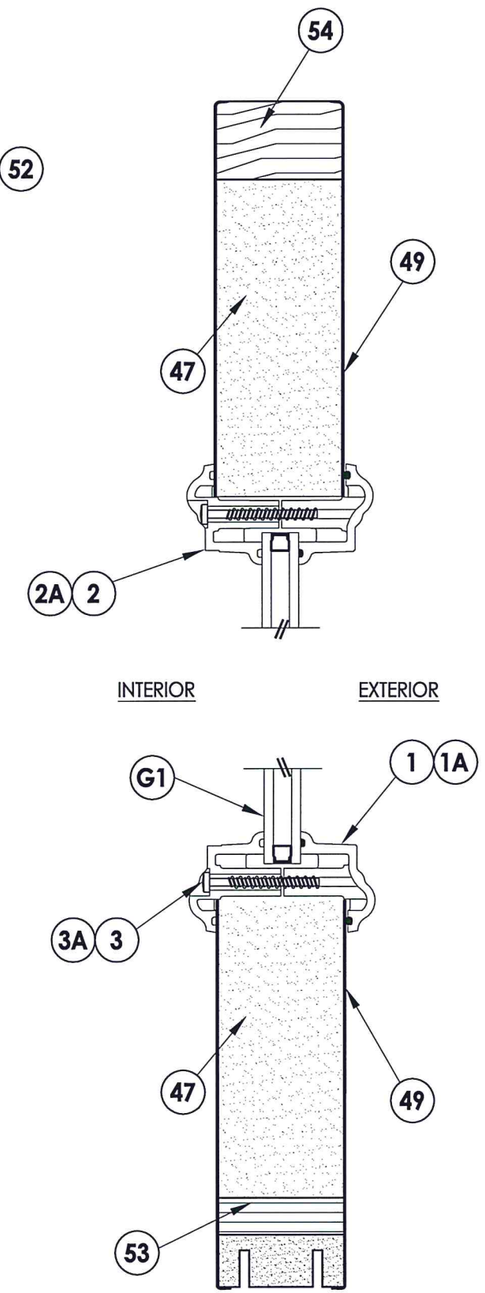


2/3 **VERTICAL CROSS SECTION**

ODL LITE FRAME SCREWS (Item #3):
HEAD/SILL (2 total), 2" from corners
JAMBS: (8 total), 6.5" from corners & 10" max. o.c.

RSL SIDELITE FRAME SCREWS (Item #3A):
HEAD/SILL (2 total), 2" from corners
JAMBS: (8 total), 3.25" from corners & 10.75" max. o.c.

STATE OF TEXAS
LYNDON F. SCHMIDT
104123
LICENSED
PROFESSIONAL ENGINEER
7-22-15


Documents Prepared By: Lyndon F. Schmidt, P.E.
TEXAS P.E. #104123
RW BUILDING CONSULTANTS, INC.
P.O. Box 230 Valrico FL. 33595
Phone No.: 813.659.9197
TEXAS BOARD OF PROFESSIONAL ENGINEERS
CERTIFICATE OF REGISTRATION # F-11852


PRODUCT: STEVES AND SONS FIBERGLASS DOOR

PART OR ASSEMBLY: SIDELITE PANEL DETAILS

| NO. | DATE | Manuf./Product Name Change | BY |
|---|---|---|---|
| 1 | 7/16/15 | | JK |

REVISIONS

DATE: 5/19/10
SCALE: N.T.S.
DWG. BY: JK
CHK. BY: LFS
DRAWING NO.: TX-4095
SHEET 3 OF 10

© 2010 R.W. BUILDING CONSULTANTS INC.

Clients\Steves and Sons - Permanent\Texas Dept of Ins\TX-4092-95.dwg, 3-4

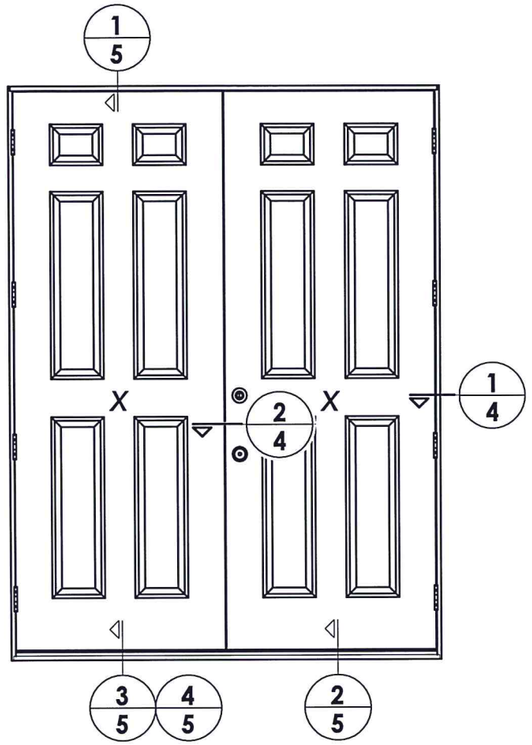


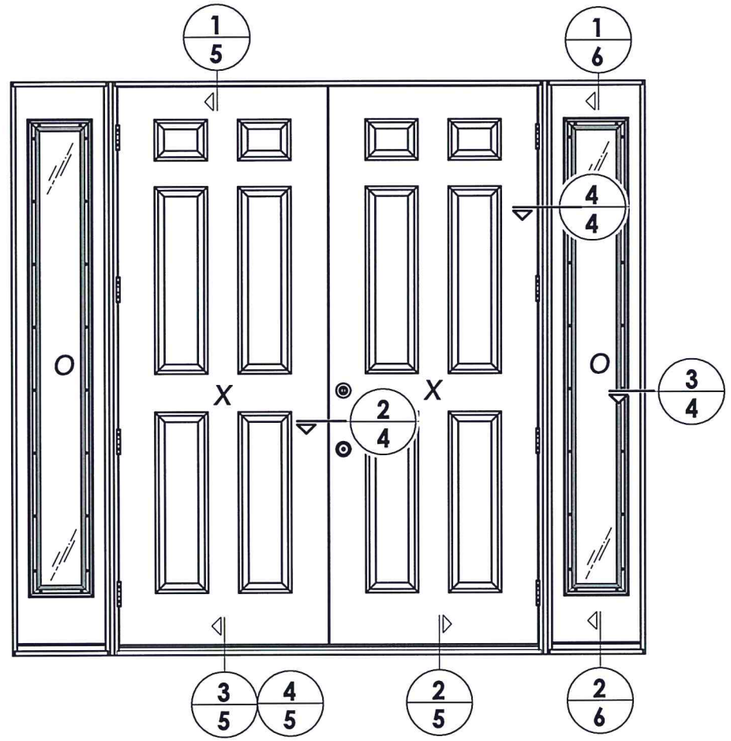


NOTE:

1. Sidelite ass'y fastener; 6" from each end and 6 more screws equally spaced between. (8 screws total per jamb.)

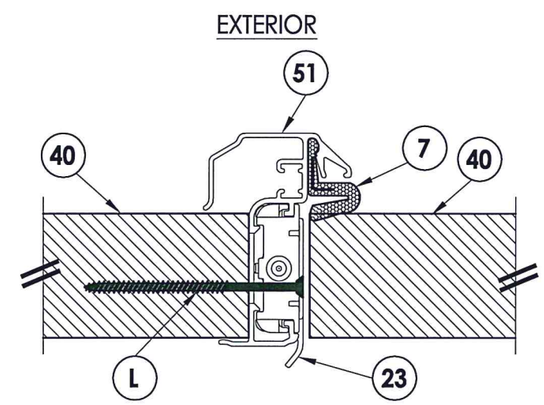


**2/4 HORIZONTAL CROSS SECTION**
Inswing shown - outswing also approved

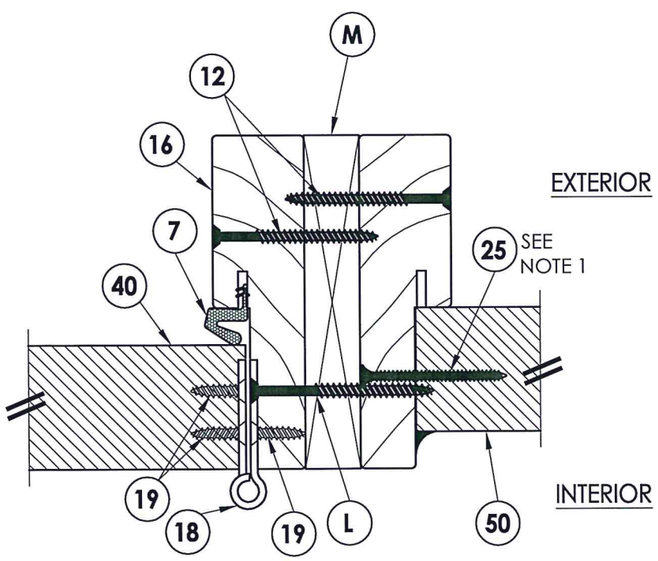


**4/4 HORIZONTAL CROSS SECTION**
Inswing shown - outswing also approved

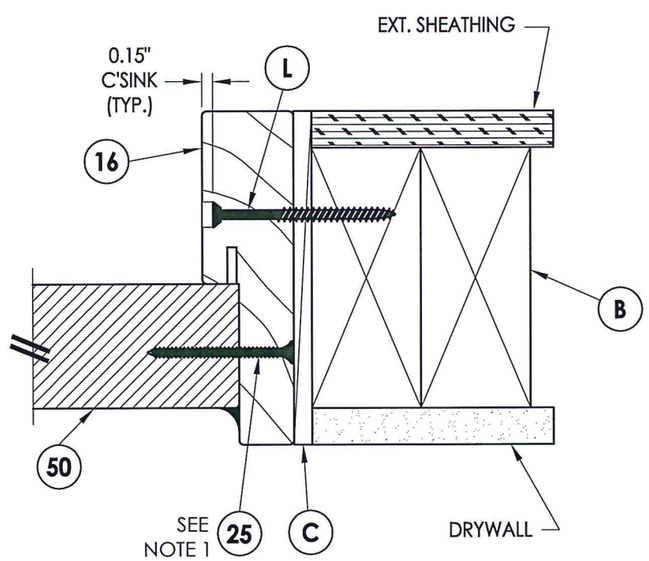


**3/4 HORIZONTAL CROSS SECTION**
Inswing shown - outswing also approved

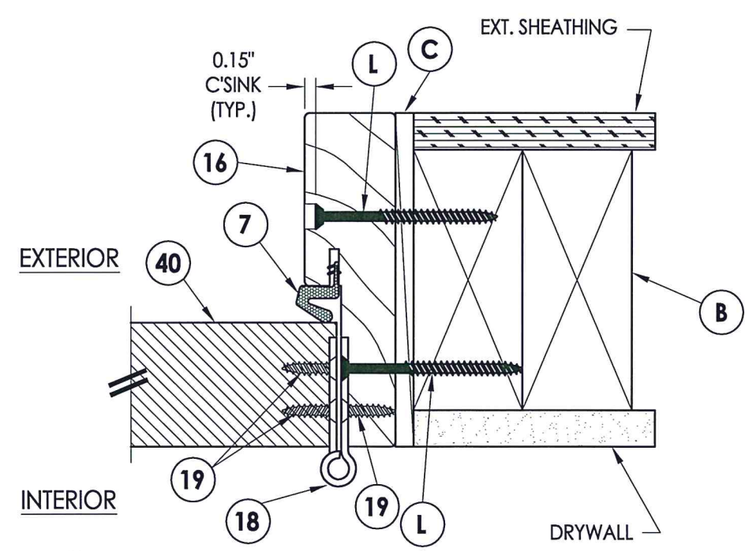


**1/4 HORIZONTAL CROSS SECTION**
Inswing shown - outswing also approved


Documents Prepared By: Lyndon F. Schmidt, P.E. TEXAS P.E. #104123
RW BUILDING CONSULTANTS, INC.
P.O. Box 230 Valrico FL. 33595
Phone No.: 813.659.9197
TEXAS BOARD OF PROFESSIONAL ENGINEERS CERTIFICATE OF REGISTRATION # F-11852


STATE OF TEXAS — LYNDON F. SCHMIDT — 104123 — LICENSED PROFESSIONAL ENGINEER — 7.22.15

PRODUCT: STEVES AND SONS FIBERGLASS DOOR

PART OR ASSEMBLY: HORIZONTAL CROSS SECTIONS

| NO. | DATE | Manuf./Product Name Change | BY |
|---|---|---|---|
| 1 | 7/16/15 | | JK |

REVISIONS

DATE: 5/19/10
SCALE: N.T.S.
DWG. BY: JK
CHK. BY: LFS
DRAWING NO.: TX-4095
SHEET 4 OF 10

© 2010 R.W. BUILDING CONSULTANTS INC.

Clients\Steves and Sons - Permanent\Texas Dept of Ins\TX-4092-95.dwg, 4-4

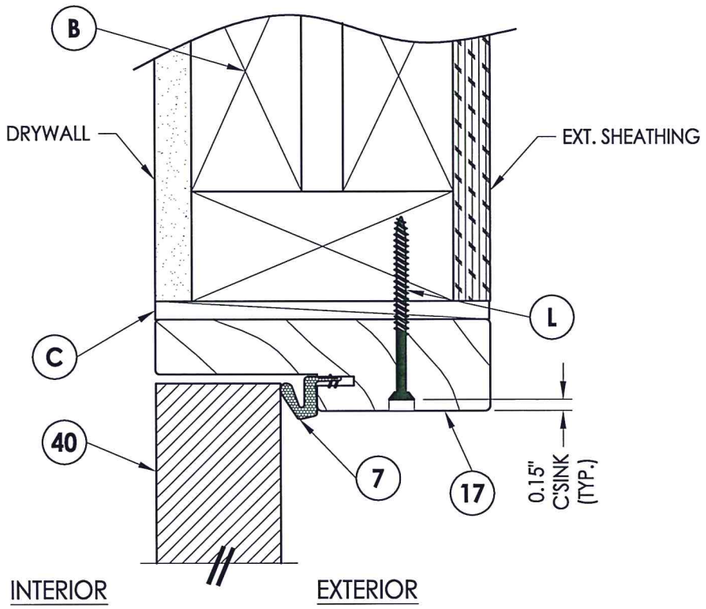


**1/5 VERTICAL CROSS SECTION**
Inswing shown - outswing also approved

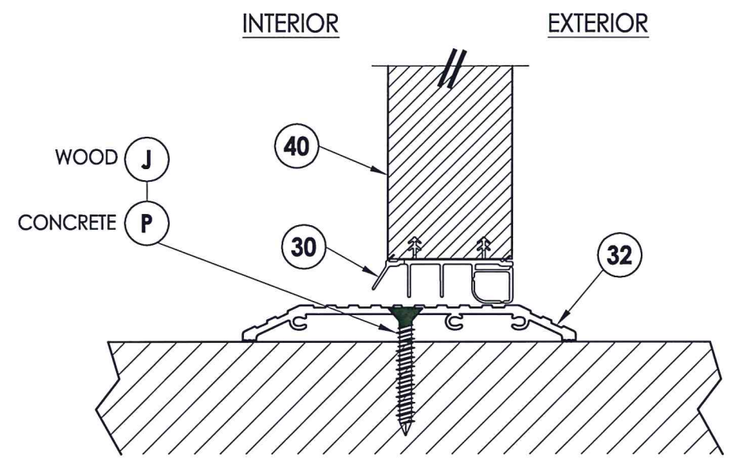


**2/5 VERTICAL CROSS SECTION**
Shown w/ ADA threshold

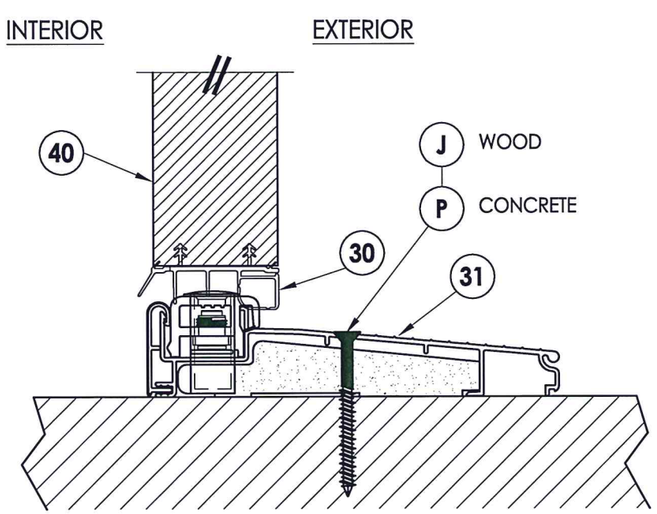


**3/5 VERTICAL CROSS SECTION**
Inswing configuration

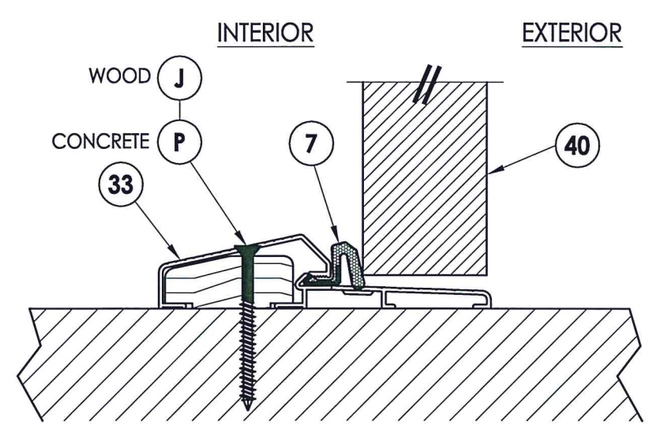


**4/5 VERTICAL CROSS SECTION**
Outswing configuration

STATE OF TEXAS
LYNDON F. SCHMIDT
104123
LICENSED PROFESSIONAL ENGINEER
7-22-15

Documents Prepared By: Lyndon F. Schmidt, P.E.
TEXAS P.E. #104123

RW BUILDING CONSULTANTS, INC.
P.O. Box 230 Valrico FL. 33595
Phone No.: 813.659.9197

TEXAS BOARD OF PROFESSIONAL ENGINEERS
CERTIFICATE OF REGISTRATION # F-11852

PRODUCT: STEVES AND SONS FIBERGLASS DOOR

PART OR ASSEMBLY: VERTICAL CROSS SECTIONS

| NO. | DATE | REVISIONS | BY |
|---|---|---|---|
| 1 | 7/16/15 | Manuf./Product Name Change | JK |

DATE: 5/19/10
SCALE: N.T.S.
DWG. BY: JK
CHK. BY: LFS
DRAWING NO.: TX-4095
SHEET 5 OF 10

© 2010 R.W. BUILDING CONSULTANTS INC.

Clients\Steves and Sons - Permanent\Texas Dept of Ins\TX-4092-95.dwg, 5-4

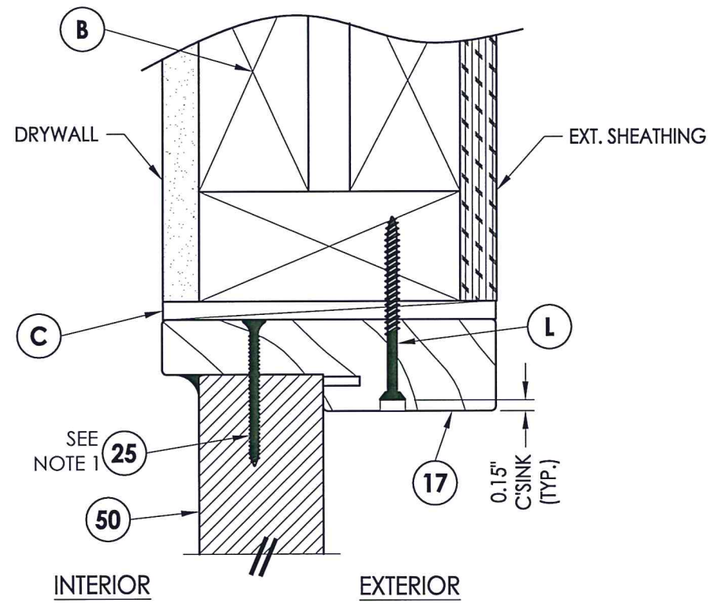


1/6 **VERTICAL CROSS SECTION**
Inswing shown - outswing also approved

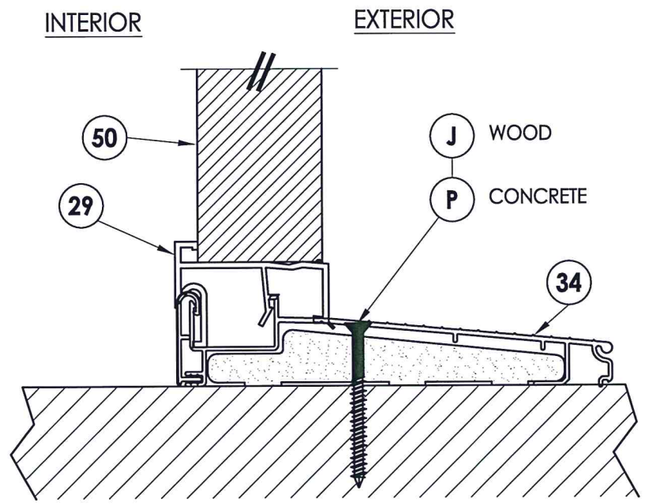


3/6 **VERTICAL CROSS SECTION**
Inswing configuration

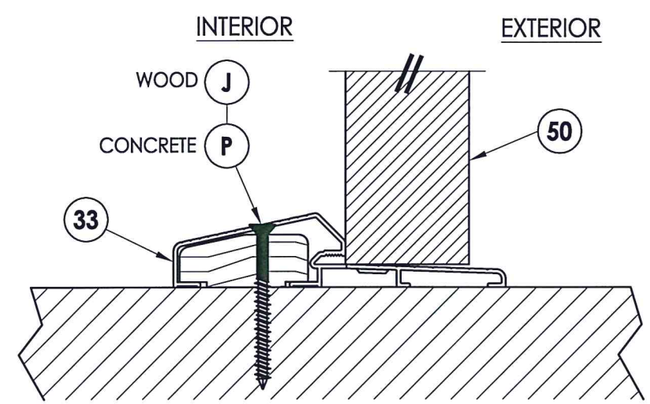


2/6 **VERTICAL CROSS SECTION**
Outswing configuration

NOTE:

1. Screws thru head and sill jamb located 3" from each end.

STATE OF TEXAS
LYNDON F. SCHMIDT
104123
LICENSED PROFESSIONAL ENGINEER
7-22-15


Documents Prepared By: Lyndon F. Schmidt, P.E.
TEXAS P.E. #104123

RW BUILDING CONSULTANTS, INC.
P.O. Box 230 Valrico FL. 33595
Phone No.: 813.659.9197

TEXAS BOARD OF PROFESSIONAL ENGINEERS
CERTIFICATE OF REGISTRATION # F-11852


PRODUCT: STEVES AND SONS FIBERGLASS DOOR

PART OR ASSEMBLY: VERTICAL CROSS SECTIONS

| NO. | DATE | | BY |
|---|---|---|---|
| 1 | 7/16/15 | Manuf./Product Name Change | JK |

REVISIONS

DATE: 5/19/10
SCALE: N.T.S.
DWG. BY: JK
CHK. BY: LFS
DRAWING NO.: TX-4095
SHEET 6 OF 10

© 2010 R.W. BUILDING CONSULTANTS INC.

Clients\Steves and Sons - Permanent\Texas Dept of Ins\TX-4092-95.dwg, 6-4

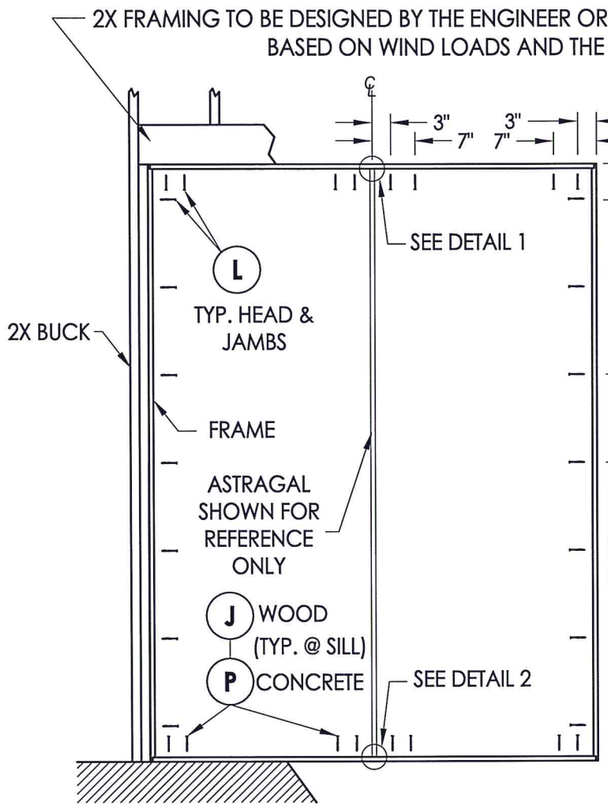


**FRAME ANCHORING**
(XX)

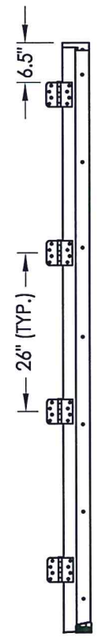


**HINGE JAMB**

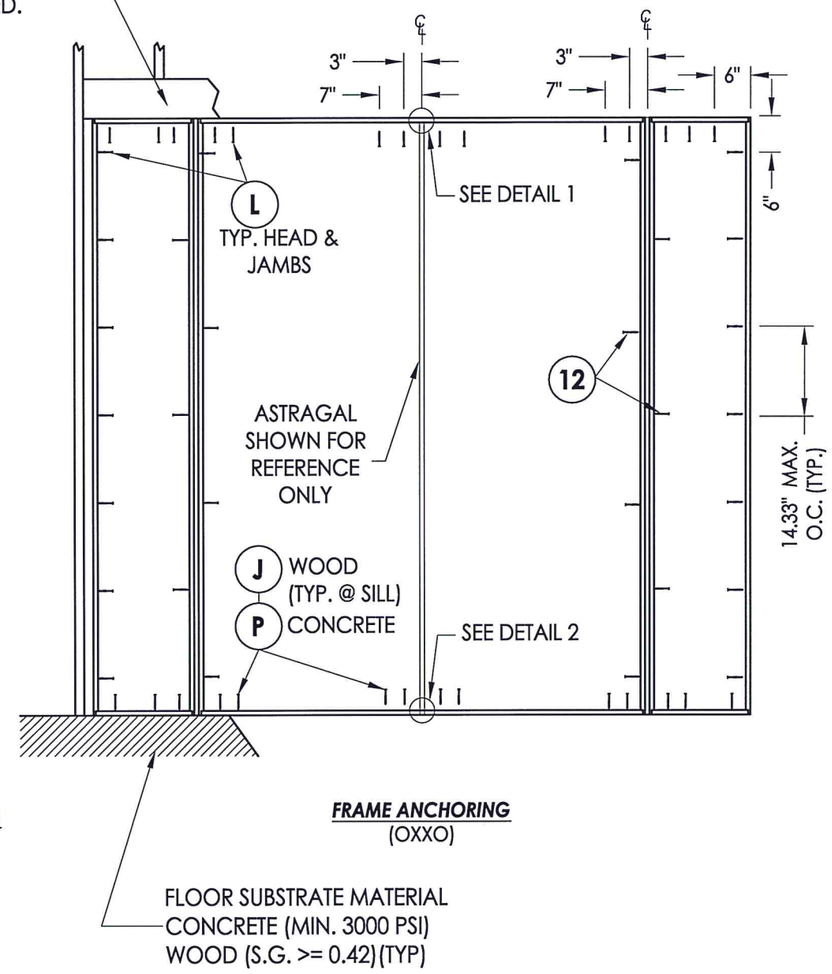


**FRAME ANCHORING**
(OXXO)

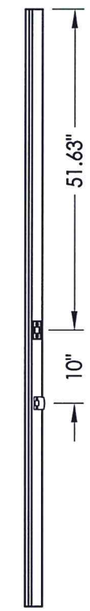


**ASTRAGAL**

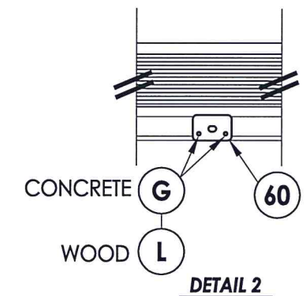


**DETAIL 2**
***Astragal Strike Plate***
Inswing

**DETAIL 2**
***Astragal Strike Plate***
Outswing

*CONCRETE ANCHOR NOTES:*

1. *Concrete anchor locations at the corners may be adjusted to maintain the min. edge distance to mortar joints.*
2. *Concrete anchor locations noted as "MAX. ON CENTER" must be adjusted to maintain the min. edge distance to mortar joints, additional concrete anchors may be required to ensure the "MAX. ON CENTER" dimension are not exceeded.*
3. *Concrete anchor table:*

| ANCHOR TYPE | ANCHOR SIZE | MIN. EMBEDMENT | MIN. CLEARANCE TO MASONRY EDGE | MIN. CLEARANCE TO ADJACENT ANCHOR |
|---|---|---|---|---|
| ITW TAPCON® | 3/16" | 1-3/4" | 3" | 1-1/2" |
| | 1/4" | 1-3/4" | 1-1/2" | 4" |
| ELCO ULTRACON® | 1/4" | 1-3/4" | 1" | 4" |

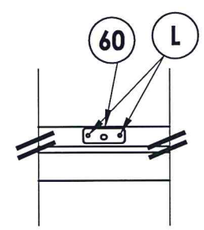


**DETAIL 1**
***Astragal Strike Plate***

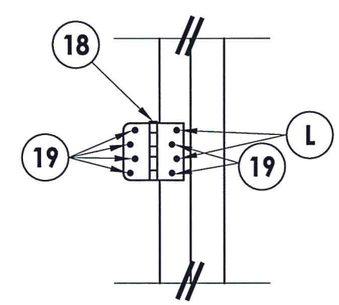


**HINGE DETAIL**

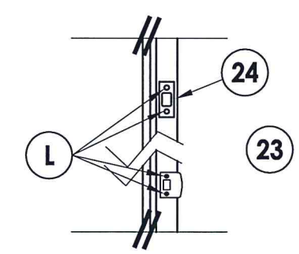


**LATCH & DEADBOLT DETAIL**
w/ Standard Strike

STATE OF TEXAS
LYNDON F. SCHMIDT
104123
LICENSED
PROFESSIONAL ENGINEER
7.22.15

Documents Prepared By: Lyndon F. Schmidt, P.E.
TEXAS P.E. #104123
RW BUILDING CONSULTANTS, INC.
P.O. Box 230 Valrico FL. 33595
Phone No.: 813.659.9197
TEXAS BOARD OF PROFESSIONAL ENGINEERS
CERTIFICATE OF REGISTRATION # F-11852

PRODUCT: STEVES AND SONS FIBERGLASS DOOR

PART OR ASSEMBLY: FRAME ANCHORING

| NO. | DATE | Manuf./Product Name Change | BY |
|---|---|---|---|
| 1 | 7/16/15 | | JK |

REVISIONS

DATE: 5/19/10
SCALE: N.T.S.
DWG. BY: JK
CHK. BY: LFS
DRAWING NO.: TX-4095
SHEET 7 OF 10

© 2010 R.W. BUILDING CONSULTANTS INC.

Clients\Steves and Sons - Permanent\Texas Dept of Ins\TX-4092-95.dwg, 7-4

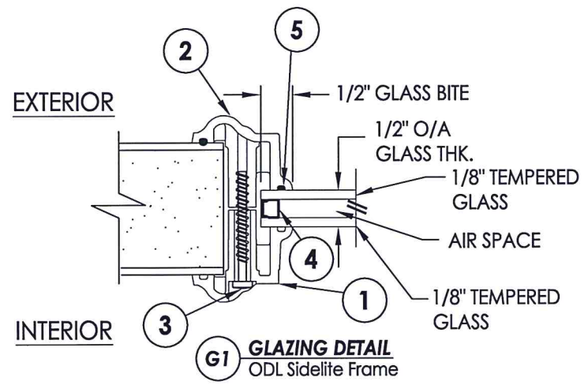


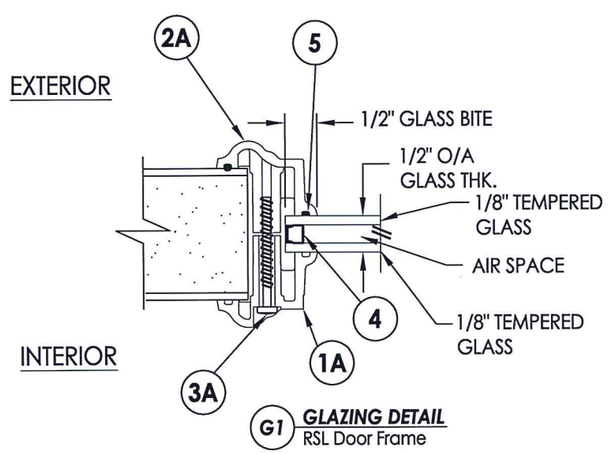


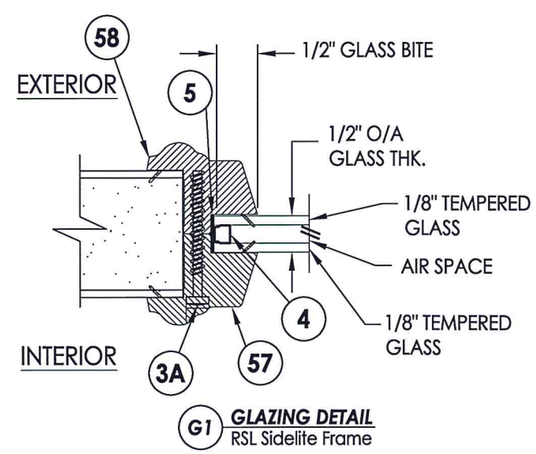


STATE OF TEXAS
LYNDON F. SCHMIDT
104123
LICENSED
PROFESSIONAL ENGINEER
7.22.15

Documents Prepared By: Lyndon F. Schmidt, P.E.
TEXAS P.E. #104123

RW BUILDING CONSULTANTS, INC.
P.O. Box 230 Valrico FL. 33595
Phone No.: 813.659.9197

TEXAS BOARD OF PROFESSIONAL ENGINEERS
CERTIFICATE OF REGISTRATION # F-11852

PRODUCT: STEVES AND SONS FIBERGLASS DOOR

PART OR ASSEMBLY: GLAZING DETAILS

| NO. | DATE | Manuf./Product Name Change | BY |
|---|---|---|---|
| 1 | 7/16/15 | | JK |

REVISIONS

DATE: 5/19/10
SCALE: N.T.S.
DWG. BY: JK
CHK. BY: LFS
DRAWING NO.: TX-4095
SHEET 8 OF 10

© 2010 R.W. BUILDING CONSULTANTS INC.

Clients\Steves and Sons - Permanent\Texas Dept of Ins\TX-4092-95.dwg, 8-4

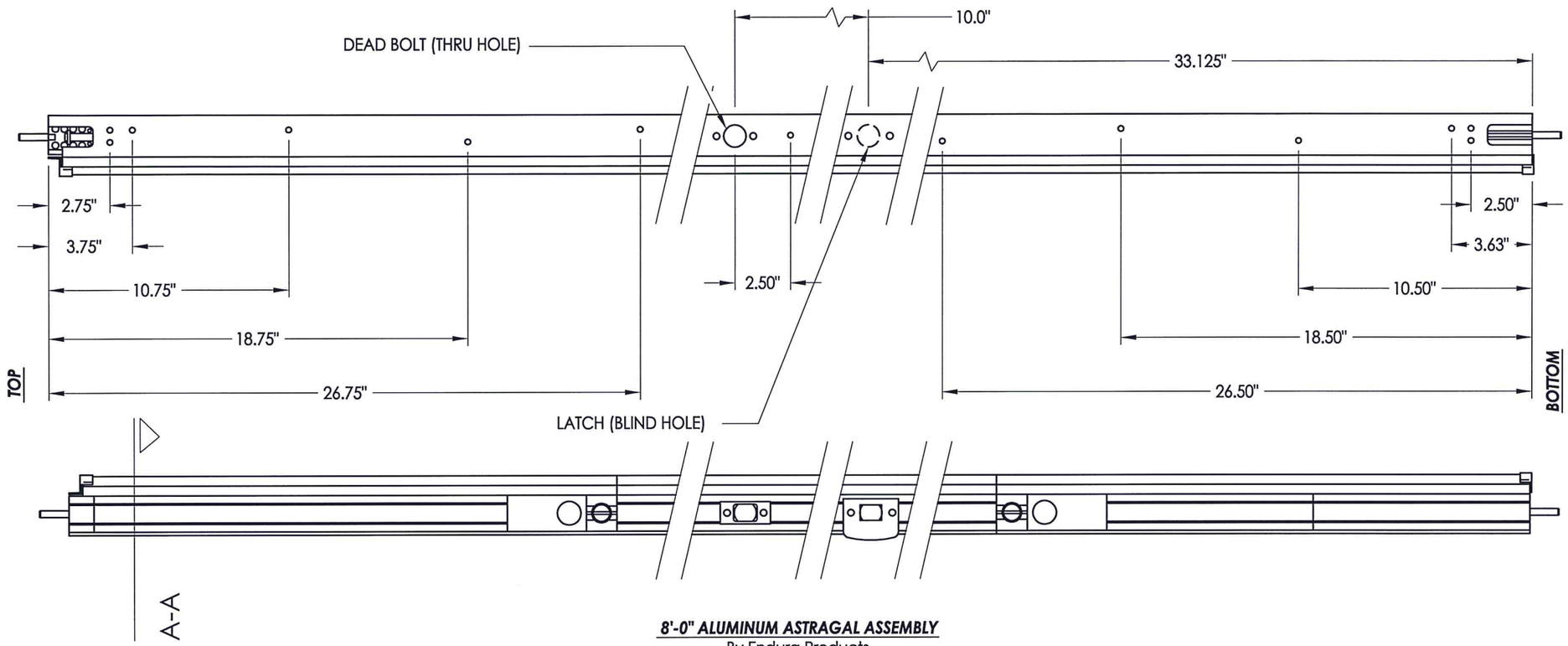


**8'-0" ALUMINUM ASTRAGAL ASSEMBLY**
By Endura Products

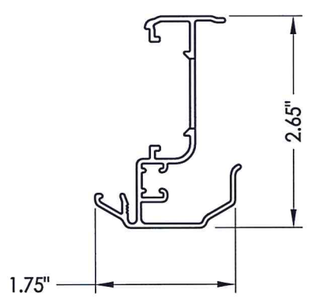


51 **ALUMINUM ASTRAGAL**
By Endura Products

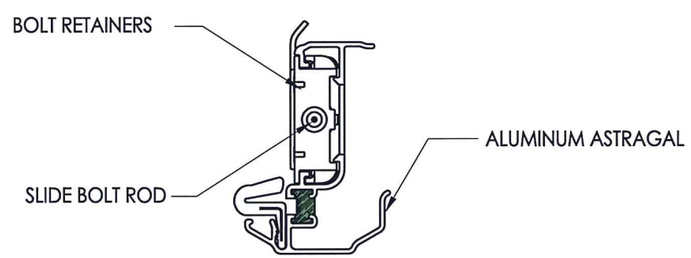


**VIEW A-A**
Aluminum Astragal Assembly

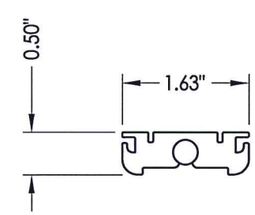


BOLT RETAINERS
MATL: 9-3/4" Aluminum

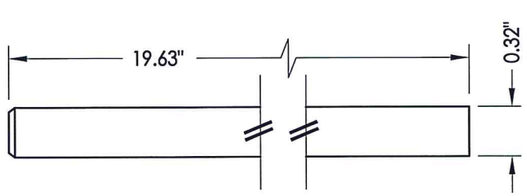


SLIDE BOLT ROD
MATL: Steel

STATE OF TEXAS
LYNDON F. SCHMIDT
104123
LICENSED PROFESSIONAL ENGINEER
7-27-15

Documents Prepared By: Lyndon F. Schmidt, P.E.
TEXAS P.E. #104123
RW BUILDING CONSULTANTS, INC.
P.O. Box 230 Valrico FL. 33595
Phone No.: 813.659.9197
TEXAS BOARD OF PROFESSIONAL ENGINEERS
CERTIFICATE OF REGISTRATION # F-11852

PRODUCT: STEVES AND SONS FIBERGLASS DOOR
PART OR ASSEMBLY: ASTRAGAL DETAILS

| NO. | DATE | Manuf./Product Name Change | BY |
|---|---|---|---|
| 1 | 7/16/15 | | JK |

REVISIONS

DATE: 05/19/10
SCALE: N.T.S.
DWG. BY: JK
CHK. BY: LFS
DRAWING NO.: TX-4095
SHEET 9 OF 10

© 2010 R.W. BUILDING CONSULTANTS INC.

Clients\Steves and Sons - Permanent\Texas Dept of Ins\TX-4092-95.dwg, 9-4

## BILL OF MATERIALS

| ITEM # | DESCRIPTION | MATERIAL |
|---|---|---|
| B | 2X FRAMING SG >= 0.42 | WOOD |
| C | 1/4" MAX. SHIM SPACE | - |
| G | 3/16" PFH ITW CONCRETE SCREW (1-3/4" MIN. EMB.) | STEEL |
| J | #10 X 3" PFH WOOD SCREW | STEEL |
| L | #10 X 2-1/2" PFH WOOD SCREW | STEEL |
| M | 1X OR 2X REINFORCEMENT SG >= 0.55 | STEEL |
| P | 1/4" PFH ELCO OR ITW CONCRETE SCREW (1-3/4" MIN. EMB.) | STEEL |
| 1 | FEMALE LITE FRAME - ODL | POLYPROPYLENE |
| 1A | FEMALE LITE FRAME - RSL | POLYPROPYLENE |
| 2 | MALE LITE FRAME - ODL | POLYPROPYLENE |
| 2A | MALE LITE FRAME - RSL | POLYPROPYLENE |
| 3 | #8 X 1-3/4" PANHEAD SMS (LIGHT FRAME SCREW) | STEEL |
| 3A | #8 X 1-1/2" PANHEAD SMS (LIGHT FRAME SCREW) | STEEL |
| 4 | ALUMINUM SPACER SYSTEM | ALUMINUM |
| 5 | HOT MELT SEALANT / SILICONE | SILICONE |
| 7 | WEATHER STRIP | FOAM |
| 12 | #10 X 2-1/4" PFH SCREW | STEEL |
| 16 | SIDE JAMB SG > = 0.42 | WOOD |
| 17 | HEAD JAMB SG > = 0.42 | WOOD |
| 18 | 4" X 4" HINGE MIN 0.1" THICK | STEEL |
| 19 | #10 X 3/4" PFH WS | STEEL |
| 20 | #10 X 2-1/2" PFH SCREW | STEEL |
| 21 | KWIKSET LOCK -SERIES 690 CP PASSAGE | STEEL |
| 22 | KWIKSET DEADBOLT -SERIES 690 CP | STEEL |
| 23 | LATCH STRIKEPLATE | STEEL |
| 24 | DEADBOLT STRIKE PLATE | STEEL |
| 25 | #8 X 2-1/2" PFH WOOD SCREW | STEEL |
| 29 | SIDELITE SPACER | VINYL |
| 30 | DOOR BOTTOM SWEEP | PVC |
| 31 | INSWING THRESHOLD | ALUM/COMP. |
| 32 | ADA THRESHOLD | ALUM. |
| 33 | OUTSWING THRESHOLD | ALUM./WOOD |
| 34 | SIDELITE THRESHOLD | ALUM./COMP. |
| 40 | DOOR PANEL - SEE DOOR PANEL DETAIL SHEET FOR CONSTRUCTION DETAILS | - |
| 41 | WOOD LOCK BLOCK | WOOD |
| 42 | HINGE STILE - SG >= 0.42 | WOOD |
| 43 | LATCH STILE - SG >= 0.42 | WOOD |
| 44 | TOP RAIL SG > = 0.42 | WOOD |
| 45 | BOTTOM RAIL | COMP./LVL |
| 46 | FRAME REINFORCEMENT SG > = 0.42 | WOOD |
| 47 | POLYSTYRENE FOAM | POLYSTYRENE |
| 49 | FIBERGLASS SKIN 0.08" MIN. THICKNESS | FIBERGLASS |
| 50 | SIDELITE PANEL - SEE SIDELITE PANEL DETAIL SHEET FOR CONSTRUCTION DETAILS | - |
| 51 | ALUMINUM ASTRAGAL | ALUM |
| 52 | SIDELITE STILE - SG>= 0.42 | WOOD |
| 53 | SIDELITE BOTTOM RAIL | COMP./LVL |
| 54 | SIDELITE TOP RAIL | WOOD |
| 57 | SIDELITE FEMALE LITE FRAME - RSL | PVC |
| 58 | SIDELITE MALE LITE FRAME - RSL | PVC |
| 59 | #8 X 2" PFH WOOD SCREW | STEEL |
| 60 | ASTRAGAL STRIKE PLATE | STEEL |

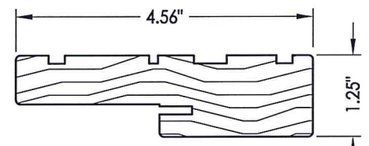


(16)(17) HEAD & SIDE Jamb

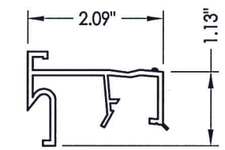


(29) SIDELITE SPACER

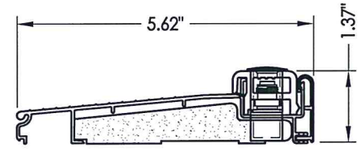


(31) INSWING THRESHOLD

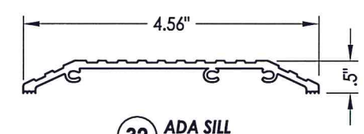


(32) ADA SILL

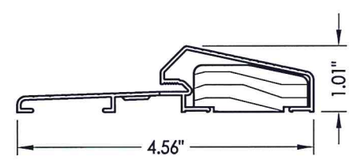


(33) OUTSWING THRESHOLD

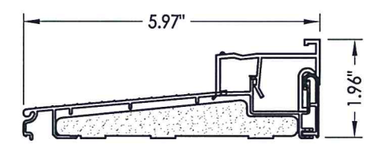


(34) SIDELITE THRESHOLD

Documents Prepared By: Lyndon F. Schmidt, P.E.
TEXAS P.E. #104123

RW BUILDING CONSULTANTS, INC.
P.O. Box 230 Valrico FL. 33595
Phone No.: 813.659.9197

TEXAS BOARD OF PROFESSIONAL ENGINEERS
CERTIFICATE OF REGISTRATION # F-11852


PRODUCT: STEVES AND SONS FIBERGLASS DOOR

PART OR ASSEMBLY: BILL OF MATERIALS & COMPONENTS

| NO. | DATE | Manuf./Product Name Change | BY |
|---|---|---|---|
| 1 | 7/16/15 | | JK |

REVISIONS

DATE: 5/19/10
SCALE: N.T.S.
DWG. BY: JK
CHK. BY: LFS
DRAWING NO.: TX-4095
SHEET 10 OF 10


© 2010 R.W. BUILDING CONSULTANTS INC.



Clients\Steves and Sons - Permanent\Texas Dept of Ins\TX-4092-95.dwg, 10-4